IEC 61185

Edition 2.0 2005-06

INTERNATIONAL STANDARD

NORME INTERNATIONALE

Withdrawn

Ferrite cores (ETD-cores) Intended for use in power supply applications – Dimensions

Noyaux ferrites (noyaux ETD) destinés à être utilisés dans les alimentations – Dimensions

IEC 61185:2005

Documents
Document Sharing Hub

Full document details: IEC 61185 2005

THIS PUBLICATION IS COPYRIGHT PROTECTED

Copyright © 2005 IEC, Geneva, Switzerland

All rights reserved. Unless otherwise specified, no part of this publication may be reproduced or utilized in any form or by any means, electronic or mechanical, including photocopying and microfilm, without permission in writing from either IEC or IEC's member National Committee in the country of the requester.
If you have any questions about IEC copyright or have an enquiry about obtaining additional rights to this publication, please contact the address below or your local IEC member National Committee for further information.

Droits de reproduction réservés. Sauf indication contraire, aucune partie de cette publication ne peut être reproduite ni utilisée sous quelque forme que ce soit et par aucun procédé, électronique ou mécanique, y compris la photocopie et les microfilms, sans l'accord écrit de la CEI ou du Comité national de la CEI du pays du demandeur.
Si vous avez des questions sur le copyright de la CEI ou si vous désirez obtenir des droits supplémentaires sur cette publication, utilisez les coordonnées ci-après ou contactez le Comité national de la CEI de votre pays de résidence.

IEC Central Office
3, rue de Varembé
CH-1211 Geneva 20
Switzerland

Tel.: +41 22 919 02 11
Fax: +41 22 919 03 00
info@iec.ch
www.iec.ch

About the IEC

The International Electrotechnical Commission (IEC) is the leading global organization that prepares and publishes International Standards for all electrical, electronic and related technologies.

About IEC publications

The technical content of IEC publications is kept under constant review by the IEC. Please make sure that you have the latest edition, a corrigenda or an amendment might have been published.

Useful links:

IEC publications search - www.iec.ch/searchpub

The advanced search enables you to find IEC publications by a variety of criteria (reference number, text, technical committee,…).
It also gives information on projects, replaced and withdrawn publications.

IEC Just Published - webstore.iec.ch/justpublished

Stay up to date on all new IEC publications. Just Published details all new publications released. Available on-line and also once a month by email.

Electropedia - www.electropedia.org

The world's leading online dictionary of electronic and electrical terms containing more than 30 000 terms and definitions in English and French, with equivalent terms in additional languages. Also known as the International Electrotechnical Vocabulary (IEV) on-line.

Customer Service Centre - webstore.iec.ch/csc

If you wish to give us your feedback on this publication or need further assistance, please contact the Customer Service Centre: csc@iec.ch.

A propos de la CEI

La Commission Electrotechnique Internationale (CEI) est la première organisation mondiale qui élabore et publie des Normes internationales pour tout ce qui a trait à l'électricité, à l'électronique et aux technologies apparentées.

A propos des publications CEI

Le contenu technique des publications de la CEI est constamment revu. Veuillez vous assurer que vous possédez l'édition la plus récente, un corrigendum ou amendement peut avoir été publié.

Liens utiles:

Recherche de publications CEI - www.iec.ch/searchpub

La recherche avancée vous permet de trouver des publications CEI en utilisant différents critères (numéro de référence, texte, comité d'études,…).
Elle donne aussi des informations sur les projets et les publications remplacées ou retirées.

Just Published CEI - webstore.iec.ch/justpublished

Restez informé sur les nouvelles publications de la CEI. Just Published détaille les nouvelles publications parues. Disponible en ligne et aussi une fois par mois par email.

Electropedia - www.electropedia.org

Le premier dictionnaire en ligne au monde de termes électroniques et électriques. Il contient plus de 30 000 termes et définitions en anglais et en français, ainsi que les termes équivalents dans les langues additionnelles. Egalement appelé Vocabulaire Electrotechnique International (VEI) en ligne.

Service Clients - webstore.iec.ch/csc

Si vous désirez nous donner des commentaires sur cette publication ou si vous avez des questions contactez-nous: csc@iec.ch.

Withdrawn

Documents
Document Sharing Hub

Full document details: IEC 61185 2005

IEC 61185

Edition 2.0 2005-06

INTERNATIONAL STANDARD

NORME INTERNATIONALE

withdrawn

Ferrite cores (ETD-cores) Intended for use in power supply applications – Dimensions

Noyaux ferrites (noyaux ETD) destinés à être utilisés dans les alimentations – Dimensions

INTERNATIONAL
ELECTROTECHNICAL
COMMISSION

COMMISSION
ELECTROTECHNIQUE
INTERNATIONALE

PRICE CODE
CODE PRIX N

ICS 29.100.10

ISBN 978-2-83220-708-6

Warning! Make sure that you obtained this publication from an authorized distributor.
Attention! Veuillez vous assurer que vous avez obtenu cette publication via un distributeur agréé.

AVA Documents
Document Sharing Hub

® Registered trademark of the International Electrotechnical Commission
Marque déposée de la Commission Electrotechnique Internationale

Full document details: IEC 61185 2005

CONTENTS

FOREWORD 3

1 Scope 5
2 Normative references 5
3 Primary standards 5
3.1 Dimensions of ETD-cores 5
3.2 Dimensional limits for coil formers 5
3.3 Pin locations and base outlines 6
3.4 Pin diameter 6
4 Marking 6
5 Mounting 6

Annex A (normative) Derived standards 11
Annex B (normative) Example of a standard for gauges to check the dimensions of ETD-cores meeting this primary standard 14

Figure 1 – Dimensions of ETD-cores 6
Figure 2 – Essential dimensions of coil formers 8
Figure 3 – Pin locations and base outlines viewed from the upper-side of the board (see 3.3) 10
Figure A.1 – Main dimensions 12
Figure B.1 – Gauge dimensions 14

Table 1 – Dimensions of ETD-cores 7
Table 2 – Effective parameter and A_{min} values 7
Table 3 – Essential dimensions of coil formers 8
Table A.1 – Main dimensions 13
Table B.1 – Gauge dimensions 14

Withdrawn

Documents
Document Sharing Hub
Full document details: IEC 61185 2005

INTERNATIONAL ELECTROTECHNICAL COMMISSION

FERRITE CORES (ETD-CORES) INTENDED FOR USE IN POWER SUPPLY APPLICATIONS – DIMENSIONS

FOREWORD

1) The International Electrotechnical Commission (IEC) is a worldwide organization for standardization comprising all national electrotechnical committees (IEC National Committees). The object of the IEC is to promote international co-operation on all questions concerning standardization in the electrical and electronic fields. To this end and in addition to other activities, IEC publishes International Standards, Technical Specifications, Technical Reports, Publicly Available Specifications (PAS) and Guides (hereafter referred to as "IEC Publication(s)"). Their preparation is entrusted to technical committees; any IEC National Committee interested in the subject dealt with may participate in this preparatory work. International, governmental and non-governmental organizations liaising with the IEC also participate in this preparation. IEC collaborates closely with the International Organization for Standardization (ISO) in accordance with conditions determined by agreement between the two organizations.

2) The formal decisions or agreements of IEC on technical matters express, as nearly as possible, an international consensus of opinion on the relevant subjects since each technical committee has representation from all interested IEC National Committees.

3) IEC Publications have the form of recommendations for international use and are accepted by IEC National Committees in that sense. While all reasonable efforts are made to ensure that the technical content of IEC Publications is accurate, IEC cannot be held responsible for the way in which they are used or for any misinterpretation by any end user.

4) In order to promote international uniformity, IEC National Committees undertake to apply IEC Publications transparently to the maximum extent possible in their national and regional publications. Any divergence between any IEC Publication and the corresponding national or regional publication shall be clearly indicated in the latter.

5) IEC provides no marking procedure to indicate its approval and cannot be rendered responsible for any equipment declared to be in conformity with an IEC Publication.

6) All users should ensure that they have the latest edition of this publication.

7) No liability shall attach to IEC or its directors, employees, servants or agents including individual experts and members of its technical committees and IEC National Committees for any personal injury, property damage or other damage of any nature whatsoever, whether direct or indirect, or for costs (including legal fees) and expenses arising out of the publication, use of, or reliance upon, this IEC Publication or any other IEC Publications.

8) Attention is drawn to the Normative references cited in this publication. Use of the referenced publications is indispensable for the correct application of this publication.

9) Attention is drawn to the possibility that some of the elements of this IEC publication may be the subject of patent rights. IEC shall not be held responsible for identifying any or all such patent rights.

International Standard IEC 61185 has been prepared by IEC technical committee 51: Magnetic components and ferrite materials.

This second edition cancels and replaces the first edition published in 1992 and its amendment 1 (1995).

The main changes with respect to the previous edition consist in combining it with the amendment.

This bilingual version (2013-05) corresponds to the monolingual English version, published in 2005-06.

Withdrawn

Documents
Document Sharing Hub
Full document details: IEC 61185 2005

The text of this standard is based on the following documents:

FDIS	Report on voting
51/818FDIS	51/826/RVD

Full information on the voting for the approval of this standard can be found in the report on voting indicated in the above table.

The French version of this standard has not been voted upon.

This publication has been drafted in accordance with the ISO/IEC Directives, Part 2.

The committee has decided that the contents of this publication will remain unchanged until the maintenance result date indicated on the IEC web site under "http://webstore.iec.ch" in the data related to the specific publication. At this date, the publication will be

- reconfirmed;
- withdrawn;
- replaced by a revised edition, or
- amended.

withdrawn

Documents
Document Sharing Hub

Full document details: IEC 61185 2005

FERRITE CORES (ETD-CORES) INTENDED FOR USE IN POWER SUPPLY APPLICATIONS – DIMENSIONS

1 Scope

This International Standard specifies the dimensions that are of importance for mechanical interchangeability for ETD-cores made of ferrite, the essential dimensions of coil formers to be used with them, and the effective parameter values to be used in calculations involving them.

NOTE 1 Whilst this standard mainly applies to ferrite, its validity for iron powder cores should not be overlooked.

NOTE 2 The cores covered by this standard are designed for use in power transformers and chokes operating at high flux density and generally at frequencies higher than those feasible with EC-cores of the same material, due to a core proportioning more suitable for high-frequency applications. They are generally used in pairs.

The use of "derived" standards which give more detailed specifications of component parts whilst still permitting compliance with this standard is discussed in Annex A, which also contains an example of a derived standard for coil formers.

2 Normative references

The following referenced documents are indispensable for the application of this document. For dated references, only the edition cited applies. For undated references, the latest edition of the normative document (including any amendments) applies.

IEC 60205:2001, *Calculation of the effective parameters of magnetic piece parts*

3 Primary standards

Compliance with the following requirements ensures mechanical interchangeability of complete assemblies and coil formers.

3.1 Dimensions of ETD-cores

3.1.1 Principal dimensions

The principal dimensions of ETD-cores shall be as given in Table 1.

NOTE The dimensions of the cores may be checked by means of gauges. By way of example, a possible standard for these gauges is given in Annex B. In order to facilitate production it may be necessary to use gauges having dimensions differing from those given in Annex B, although no relaxation of the requirements for the dimensions of the cores given in Table 1 is permitted.

3.1.2 Effective parameter and A_{min} values

The effective parameter values of a pair of cores whose dimensions comply with 3.1.1 shall be as given in Table 2.

3.2 Dimensional limits for coil formers

The essential dimensions of coil formers suitable for use with a pair of ETD-cores shall be as given in Table 3.

Withdrawn

AVA Documents Document Sharing Hub

Full document details: IEC 61185 2005

3.3 Pin locations and base outlines

These shall be as shown in Figure 3, in which the base is viewed in the mounting direction, i.e. from the upper side of the printed wiring board.

NOTE The module, designated as m, shown in the grid plan may be 2,50 mm or 2,54 mm.

3.4 Pin diameter

Coil former terminations (pins) shall be accepted by a gauge having 1,2 mm holes on true position.

4 Marking

Where a coil former is fitted with termination pins conforming to a 2,50 mm module, it shall be clearly and indelibly marked with the letter m, in such a position that it can readily be seen in the completed component.

5 Mounting

According to their sizes and respective weights, it is recommended that two largest cores (ETD 54 and ETD 59) be fixed on the printed board by means of screws located at two opposite sides of their coil formers.

Concerning smaller sizes such as ETD 19 and ETD 24, no mounting assemblies are defined. It is recommended that the two cores be fixed by glue or adhesive tape.

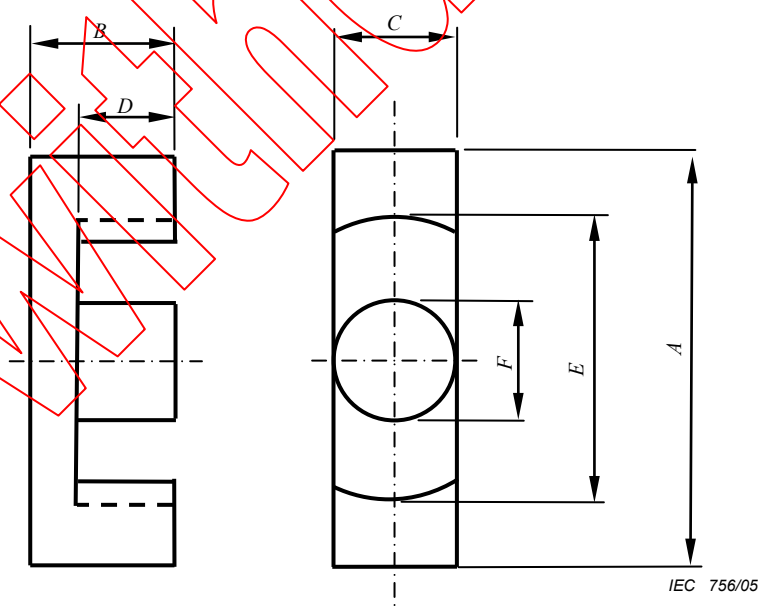

Figure 1 – Dimensions of ETD-cores

Withdrawn

Documents
Document Sharing Hub
Full document details: IEC 61185 2005

Table 1 – Dimensions of ETD-cores

Size	*A* mm		*B* mm		*C* mm		*D* mm		*E* mm		*F* mm	
	Min.	**Max.**	**Min.**	**Max.**	**Min.**	**Max.**	**Min.**	**Max.**	**Min.**	**Max.**	**Min.**	**Max.**
ETD 19	19,1	20,1	13,5	13,8	7,2	7,6	9,2	9,6	14,4	15,4	7,2	7,6
ETD 24	23,8	25,0	14,3	14,6	8,2	8,8	9,9	10,3	18,0	19,2	8,2	8,8
ETD 29	29,0	30,6	15,6	16,0	9,2	9,8	10,7	11,3	22,0	23,4	9,2	9,8
ETD 34	33,4	35,0	17,1	17,5	10,5	11,1	11,8	12,4	25,6	27,0	10,5	11,1
ETD 39	38,2	40,0	19,6	20,0	12,2	12,8	14,2	15,0	29,3	30,9	12,2	12,8
ETD 44	43,0	45,0	22,1	22,5	14,4	15,2	16,1	16,9	32,5	34,1	14,4	15,2
ETD 49	47,6	49,8	24,5	24,9	15,9	16,7	17,7	18,5	36,1	37,9	15,9	16,7
ETD 54	55,8	58,3	27,4	27,8	18,5	19,3	19,8	20,6	40,1	42,3	18,5	19,3
ETD 59	58,4	61,2	30,8	31,2	21,2	22,1	22,0	22,9	43,6	45,8	21,2	22,1

Table 2 – Effective parameter and A_{min} values

Size	C_1 mm^{-1}	C_2 mm^{-3}	l_e mm	A_e mm^2	V_e mm^3	A_{min} [a] mm^2
ETD 19	1,253 9	$28{,}412 \times 10^{-3}$	55,3	44,1	2 440	39,5
ETD 24	1,053 7	$17{,}811 \times 10^{-3}$	62,3	59,2	3 690	55,0
ETD 29	0,927 07	$12{,}139 \times 10^{-3}$	70,8	76,4	5 410	70,9
ETD 34	0,814 49	$8{,}387\,9 \times 10^{-3}$	79,1	97,1	7 680	91,6
ETD 39	0,742 00	$5{,}940\,1 \times 10^{-3}$	92,7	125	11 600	123
ETD 44	0,599 18	$3{,}462\,8 \times 10^{-3}$	104	173	17 900	172
ETD 49	0,542 45	$2{,}569\,2 \times 10^{-3}$	115	211	24 200	209
EDT 54	0,455 01	$1{,}625\,1 \times 10^{-3}$	127	280	35 700	280
ETD 59	0,382 24	$1{,}038\,9 \times 10^{-3}$	141	368	51 700	366

[a] See IEC 60205 sub-clause 2.2 for the definition of A_{min}.

NOTE 1 The manufacturers may indicate in their catalogues more precise values than those given in Table 2.

NOTE 2 The above values have been calculated using the method given in 3.5 of IEC 60205.

Withdrawn

Documents
Document Sharing Hub
Full document details: IEC 61185 2005

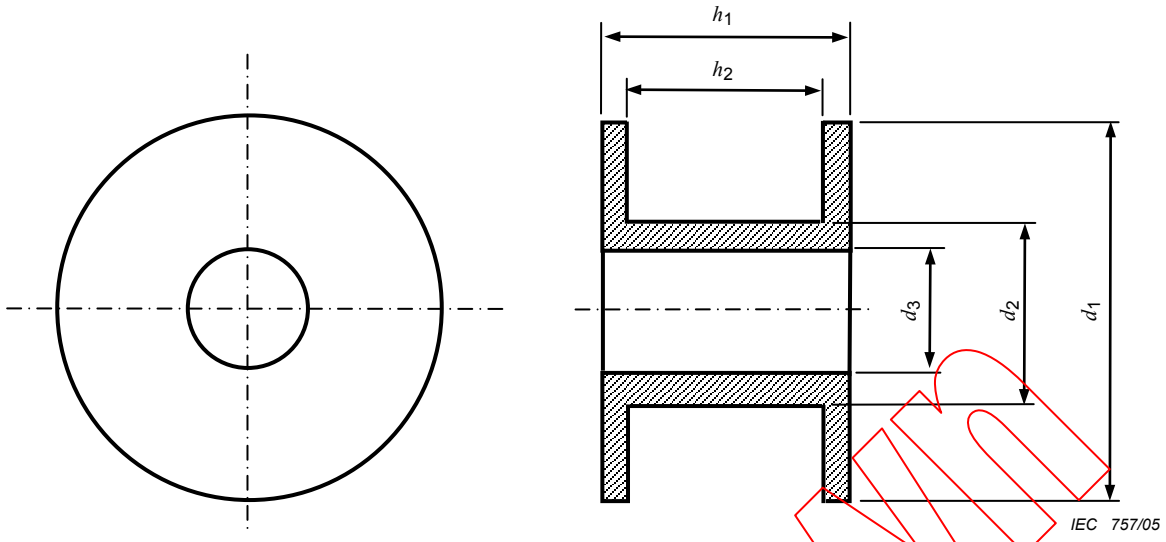

Figure 2 – Essential dimensions of coil formers

Table 3 – Essential dimensions of coil formers

Size	d_1 mm	d_2 mm	d_3 mm	h_1 mm	h_2 mm
	Max.	**Max.**	**Min.**	**Max.**	**Min.**
ETD 19	14,1	9,8	7,8	18,2	15,9
ETD 24	17,6	11,0	9,0	19,6	17,1
ETD 29	21,6	12,0	10,0	21,2	19,2
ETD 34	25,2	13,6	11,3	23,4	20,9
ETD 39	28,8	15,3	13,0	28,2	25,7
ETD 44	32,0	17,7	15,4	32,0	29,5
ETD 49	35,5	19,5	17,0	35,2	32,7
ETD 54	39,5	22,1	19,6	39,3	36,8
ETD 59	43,0	24,9	22,4	43,7	41,2

Withdrawn

Documents
Document Sharing Hub
Full document details: IEC 61185 2005