IEC 61189-2-721

Edition 1.0 2015-04

INTERNATIONAL STANDARD

NORME INTERNATIONALE

colour inside

Test methods for electrical materials, printed boards and other interconnection structures and assemblies – Part 2-721: Test methods for materials for interconnection structures – Measurement of relative permittivity and loss tangent for copper clad laminate at microwave frequency using split post dielectric resonator

Méthodes d'essai pour les matériaux électriques, les cartes imprimées et autres structures d'interconnexion et ensembles – Partie 2-721: Méthodes d'essai des matériaux pour structures d'interconnexion – Mesure de la permittivité relative et de la tangente de perte pour les stratifiés recouverts de cuivre en hyperfréquences à l'aide d'un résonateur diélectrique en anneaux fendus

IEC 61189-2-721:2015-04(en-fr)

AVA Documents
Document Sharing Hub

Full document details: IEC 61189-2-721 2015

THIS PUBLICATION IS COPYRIGHT PROTECTED

Copyright © 2015 IEC, Geneva, Switzerland

All rights reserved. Unless otherwise specified, no part of this publication may be reproduced or utilized in any form or by any means, electronic or mechanical, including photocopying and microfilm, without permission in writing from either IEC or IEC's member National Committee in the country of the requester. If you have any questions about IEC copyright or have an enquiry about obtaining additional rights to this publication, please contact the address below or your local IEC member National Committee for further information.

Droits de reproduction réservés. Sauf indication contraire, aucune partie de cette publication ne peut être reproduite ni utilisée sous quelque forme que ce soit et par aucun procédé, électronique ou mécanique, y compris la photocopie et les microfilms, sans l'accord écrit de l'IEC ou du Comité national de l'IEC du pays du demandeur. Si vous avez des questions sur le copyright de l'IEC ou si vous désirez obtenir des droits supplémentaires sur cette publication, utilisez les coordonnées ci-après ou contactez le Comité national de l'IEC de votre pays de résidence.

IEC Central Office
3, rue de Varembé
CH-1211 Geneva 20
Switzerland

Tel.: +41 22 919 02 11
Fax: +41 22 919 03 00
info@iec.ch
www.iec.ch

About the IEC
The International Electrotechnical Commission (IEC) is the leading global organization that prepares and publishes International Standards for all electrical, electronic and related technologies.

About IEC publications
The technical content of IEC publications is kept under constant review by the IEC. Please make sure that you have the latest edition, a corrigenda or an amendment might have been published.

IEC Catalogue - webstore.iec.ch/catalogue
The stand-alone application for consulting the entire bibliographical information on IEC International Standards, Technical Specifications, Technical Reports and other documents. Available for PC, Mac OS, Android Tablets and iPad.

IEC publications search - www.iec.ch/searchpub
The advanced search enables to find IEC publications by a variety of criteria (reference number, text, technical committee,…). It also gives information on projects, replaced and withdrawn publications.

IEC Just Published - webstore.iec.ch/justpublished
Stay up to date on all new IEC publications. Just Published details all new publications released. Available online and also once a month by email.

Electropedia - www.electropedia.org
The world's leading online dictionary of electronic and electrical terms containing more than 30 000 terms and definitions in English and French, with equivalent terms in 15 additional languages. Also known as the International Electrotechnical Vocabulary (IEV) online.

IEC Glossary - std.iec.ch/glossary
More than 60 000 electrotechnical terminology entries in English and French extracted from the Terms and Definitions clause of IEC publications issued since 2002. Some entries have been collected from earlier publications of IEC TC 37, 77, 86 and CISPR.

IEC Customer Service Centre - webstore.iec.ch/csc
If you wish to give us your feedback on this publication or need further assistance, please contact the Customer Service Centre: csc@iec.ch.

A propos de l'IEC
La Commission Electrotechnique Internationale (IEC) est la première organisation mondiale qui élabore et publie des Normes internationales pour tout ce qui a trait à l'électricité, à l'électronique et aux technologies apparentées.

A propos des publications IEC
Le contenu technique des publications IEC est constamment revu. Veuillez vous assurer que vous possédez l'édition la plus récente, un corrigendum ou amendement peut avoir été publié.

Catalogue IEC - webstore.iec.ch/catalogue
Application autonome pour consulter tous les renseignements bibliographiques sur les Normes internationales, Spécifications techniques, Rapports techniques et autres documents de l'IEC. Disponible pour PC, Mac OS, tablettes Android et iPad.

Recherche de publications IEC - www.iec.ch/searchpub

La recherche avancée permet de trouver des publications IEC en utilisant différents critères (numéro de référence, texte, comité d'études,…). Elle donne aussi des informations sur les projets et les publications remplacées ou retirées.

IEC Just Published - webstore.iec.ch/justpublished

Restez informé sur les nouvelles publications IEC. Just Published détaille les nouvelles publications parues. Disponible en ligne et aussi une fois par mois par email.

Electropedia - www.electropedia.org

Le premier dictionnaire en ligne de termes électroniques et électriques. Il contient plus de 30 000 termes et définitions en anglais et en français, ainsi que les termes équivalents dans 15 langues additionnelles. Egalement appelé Vocabulaire Electrotechnique International (IEV) en ligne.

Glossaire IEC - std.iec.ch/glossary
Plus de 60 000 entrées terminologiques électrotechniques, en anglais et en français, extraites des articles Termes et Définitions des publications IEC parues depuis 2002. Plus certaines entrées antérieures extraites des publications des CE 37, 77, 86 et CISPR de l'IEC.

Service Clients - webstore.iec.ch/csc

Si vous désirez nous donner des commentaires sur cette publication ou si vous avez des questions contactez-nous: csc@iec.ch.

Documents
Document Sharing Hub

Full document details: IEC 61189-2-721 2015

IEC 61189-2-721

Edition 1.0 2015-04

INTERNATIONAL STANDARD

NORME INTERNATIONALE

colour inside

Test methods for electrical materials, printed boards and other interconnection structures and assemblies – Part 2-721: Test methods for materials for interconnection structures – Measurement of relative permittivity and loss tangent for copper clad laminate at microwave frequency using split post dielectric resonator

Méthodes d'essai pour les matériaux électriques, les cartes imprimées et autres structures d'interconnexion et ensembles – Partie 2-721: Méthodes d'essai des matériaux pour structures d'interconnexion – Mesure de la permittivité relative et de la tangente de perte pour les stratifiés recouverts de cuivre en hyperfréquences à l'aide d'un résonateur diélectrique en anneaux fendus

INTERNATIONAL
ELECTROTECHNICAL
COMMISSION

COMMISSION
ELECTROTECHNIQUE
INTERNATIONALE

ICS 31.180

ISBN 978-2-8322-2648-3

Warning! Make sure that you obtained this publication from an authorized distributor.
Attention! Veuillez vous assurer que vous avez obtenu cette publication via un distributeur agréé.

AVA Documents
Document Sharing Hub

® Registered trademark of the International Electrotechnical Commission
Marque déposée de la Commission Electrotechnique Internationale

Full document details: IEC 61189-2-721 2015

CONTENTS

FOREWORD 4
1 Scope 6
2 Test specimens 6
2.1 Specimen size 6
2.2 Preparation 7
2.3 Marking 7
2.4 Thickness 7
3 Equipment/apparatus 7
3.1 General 7
3.2 Vector network analyzer (VNA) 8
3.3 SPDR test fixture 8
3.3.1 General 8
3.3.2 Parameters 8
3.3.3 Frequency 8
3.4 Verify unit 9
3.5 Micrometer 9
3.6 Circulating oven 9
3.7 Test chamber 9
4 Procedure 9
4.1 Preconditioning 9
4.2 Testing of relative permittivity and loss tangent at room temperature 9
4.2.1 Test conditions 9
4.2.2 Preparation 9
4.2.3 Fixture 10
4.2.4 Connection to VNA 10
4.2.5 VNA parameter 10
4.2.6 Frequency and Q-factor without specimen 10
4.2.7 Micrometer 10
4.2.8 Setting the specimen 10
4.2.9 Frequency and Q-factor with specimen 10
4.2.10 Comparison 10
4.2.11 Calculation 11
4.2.12 Change the specimen 12
4.2.13 Change in test frequency 12
4.3 Testing of relative permittivity and loss tangent at variable temperatures 12
4.3.1 Test conditions 12
4.3.2 Preparation 12
4.3.3 Fixture 12
4.3.4 Connection to VNA 12
4.3.5 VNA parameter 12
4.3.6 Temperature in the chamber 12
4.3.7 Frequency and Q-factor without specimen 12
4.3.8 Micrometer 12
4.3.9 Setting of the specimen 13
4.3.10 Frequency and Q-factor with specimen 13
4.3.11 Calculation 13

Documents
Document Sharing Hub
Full document details: IEC 61189-2-721 2015

4.3.12 Options 13
4.3.13 Thermal coefficient 13
4.3.14 Change in test frequency 14
5 Report 14
5.1 At room temperature 14
5.2 At variable temperature 14
6 Additional information 14
6.1 Accuracy 14
6.2 Maintenance 14
6.3 Matters to be attended 15
6.4 Additional information concerning fixtures and results 15
6.5 Additional information on $K_\varepsilon(\varepsilon_r,h)$ and p_{es} 15
Annex A (informative) Example of test fixture and test result 16
A.1 Example of test fixture 16
A.2 Example of test result 16
Annex B (informative) Additional information on K_ε (ε_r,h) and p_{es} 19
Bibliography 22

Figure 1 – Scheme of SPDR test fixture 6
Figure 2 – Component diagram of test system 8
Figure 3 – Scheme of the change of resonance frequency with or without the specimen 10
Figure A.1 – Test fixture 16
Figure A.2 – Relative permittivity versus frequency (laminate of Dk 3,8 and thickness 0,51 mm) 17
Figure A.3 – Loss tangent versus frequency (laminate of Dk 3,8 and thickness 0,51 mm) 17
Figure A.4 – Curve of relative permittivity and loss tangent at variable temperatures (laminate of Dk 3,8 and thickness 0,51 mm) 18
Figure B.1 – $K_\varepsilon(\varepsilon_r,h)$ versus relative permittivity at different sample thicknesses 19
Figure B.2 – Distribution of the electric field of the split dielectric resonator (side view of the dielectric resonators) 20
Figure B.3 – Distribution of the electric field of the split dielectric resonator (top view between the dielectric resonators) 21
Figure B.4 – p_{es} versus relative permittivity at different sample thicknesses 21

Table 1 – Specimen dimensions 7
Table 2 – SPDR test fixture's parameter 9
Table B.1 – Results of measurements of different materials using a 10 GHz SPDR 20

Documents
Document Sharing Hub
Full document details: IEC 61189-2-721 2015

INTERNATIONAL ELECTROTECHNICAL COMMISSION

TEST METHODS FOR ELECTRICAL MATERIALS, PRINTED BOARDS AND OTHER INTERCONNECTION STRUCTURES AND ASSEMBLIES –

Part 2-721: Test methods for materials for interconnection structures – Measurement of relative permittivity and loss tangent for copper clad laminate at microwave frequency using split post dielectric resonator

FOREWORD

1) The International Electrotechnical Commission (IEC) is a worldwide organization for standardization comprising all national electrotechnical committees (IEC National Committees). The object of IEC is to promote international co-operation on all questions concerning standardization in the electrical and electronic fields. To this end and in addition to other activities, IEC publishes International Standards, Technical Specifications, Technical Reports, Publicly Available Specifications (PAS) and Guides (hereafter referred to as "IEC Publication(s)"). Their preparation is entrusted to technical committees; any IEC National Committee interested in the subject dealt with may participate in this preparatory work. International, governmental and non-governmental organizations liaising with the IEC also participate in this preparation. IEC collaborates closely with the International Organization for Standardization (ISO) in accordance with conditions determined by agreement between the two organizations.
2) The formal decisions or agreements of IEC on technical matters express, as nearly as possible, an international consensus of opinion on the relevant subjects since each technical committee has representation from all interested IEC National Committees.
3) IEC Publications have the form of recommendations for international use and are accepted by IEC National Committees in that sense. While all reasonable efforts are made to ensure that the technical content of IEC Publications is accurate, IEC cannot be held responsible for the way in which they are used or for any misinterpretation by any end user.
4) In order to promote international uniformity, IEC National Committees undertake to apply IEC Publications transparently to the maximum extent possible in their national and regional publications. Any divergence between any IEC Publication and the corresponding national or regional publication shall be clearly indicated in the latter.
5) IEC itself does not provide any attestation of conformity. Independent certification bodies provide conformity assessment services and, in some areas, access to IEC marks of conformity. IEC is not responsible for any services carried out by independent certification bodies.
6) All users should ensure that they have the latest edition of this publication.
7) No liability shall attach to IEC or its directors, employees, servants or agents including individual experts and members of its technical committees and IEC National Committees for any personal injury, property damage or other damage of any nature whatsoever, whether direct or indirect, or for costs (including legal fees) and expenses arising out of the publication, use of, or reliance upon, this IEC Publication or any other IEC Publications.
8) Attention is drawn to the Normative references cited in this publication. Use of the referenced publications is indispensable for the correct application of this publication.
9) Attention is drawn to the possibility that some of the elements of this IEC Publication may be the subject of patent rights. IEC shall not be held responsible for identifying any or all such patent rights.

International Standard IEC 61189-2-721 has been prepared by IEC technical committee 91: Electronics assembly technology.

The text of this standard is based on the following documents:

FDIS	Report on voting
91/1246/FDIS	91/1258/RVD

Full information on the voting for the approval of this standard can be found in the report on voting indicated in the above table.

Documents
Document Sharing Hub

Full document details: IEC 61189-2-721 2015

A list of all parts in the IEC 61189 series, published under the general title *Test methods for electrical materials, printed boards and other interconnection structures and assemblies*, can be found on the IEC website.

Future standards in this series will carry the new general title as cited above. Titles of existing standards in this series will be updated at the time of the next edition.

This publication has been drafted in accordance with the ISO/IEC Directives, Part 2.

The committee has decided that the contents of this publication will remain unchanged until the stability date indicated on the IEC website under "http://webstore.iec.ch" in the data related to the specific publication. At this date, the publication will be

- reconfirmed,
- withdrawn,
- replaced by a revised edition, or
- amended.

IMPORTANT – The 'colour inside' logo on the cover page of this publication indicates that it contains colours which are considered to be useful for the correct understanding of its contents. Users should therefore print this document using a colour printer.

Documents
Document Sharing Hub

Full document details: IEC 61189-2-721 2015

TEST METHODS FOR ELECTRICAL MATERIALS, PRINTED BOARDS AND OTHER INTERCONNECTION STRUCTURES AND ASSEMBLIES –

Part 2-721: Test methods for materials for interconnection structures – Measurement of relative permittivity and loss tangent for copper clad laminate at microwave frequency using split post dielectric resonator

1 Scope

This part of IEC 61189 outlines a way to determine the relative permittivity (ε_r) and loss tangent (tanδ) (also called dielectric constant (*Dk*) and dissipation factor (*Df*)) of copper clad laminates at microwave frequencies (from 1,1 GHz to 20 GHz) using a split post dielectric resonator (SPDR).

This part of IEC 61189 is applicable to copper clad laminates and dielectric base materials.

2 Test specimens

2.1 Specimen size

The size of the specimen shall be larger than the internal diameter D of the metal enclosures, and the maximum thickness of the specimen shall be smaller than the distance h_g between the metal enclosures of the fixture. (See Figure 1.)

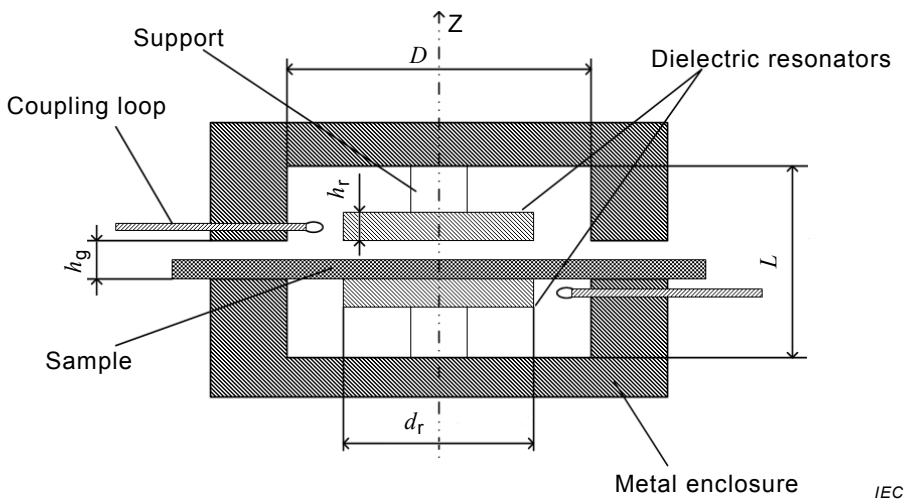

Key

h_g distance between the metal enclosures of the fixture;

D internal diameter of the metal enclosures;

L internal height of the metal enclosures;

d_r diameter of the dielectric resonator;

h_r thickness of the dielectric resonator.

Figure 1 – Scheme of SPDR test fixture

Documents
Document Sharing Hub
Full document details: IEC 61189-2-721 2015

Three specimens for the test at room temperature and one specimen for the test at variable temperatures are required for each SPDR test fixture for this test. Table 1 shows the supported specimen dimensions.

Table 1 – Specimen dimensions

SPDR test fixture's nominal frequency GHz	Supported specimen sizes mm	Maximum thickness of specimens mm
1,1	150 × 150	6,0
3	80 × 80	3,0
5 to 6	80 × 80	2,0
9 to 10	80 × 80	0,9
13 to 16	50 × 35	0,6
18 to 20	15 × 15	0,5

If applicable, a specimen size different from those given in Table 1 can be used. For example, specimen size "130 mm × 130 mm" can be used for 1,1 GHz.

2.2 Preparation

Copper clad laminates shall have all copper cladding removed by etching, and shall be thoroughly cleaned.

2.3 Marking

Mark each specimen in the upper left corner with an engraving pencil or other suitable method.

2.4 Thickness

Within the limits of the test fixture, the thicker the specimen is, the less error occurs in the measurements. Thin specimen can be stacked up to a minimum of 0,4 mm to improve measurement accuracy.

NOTE Air gaps between the sample and fixture do not affect the measurement.

3 Equipment/apparatus

3.1 General

The component diagram of the test system is shown in Figure 2.

Documents
Document Sharing Hub

Full document details: IEC 61189-2-721 2015

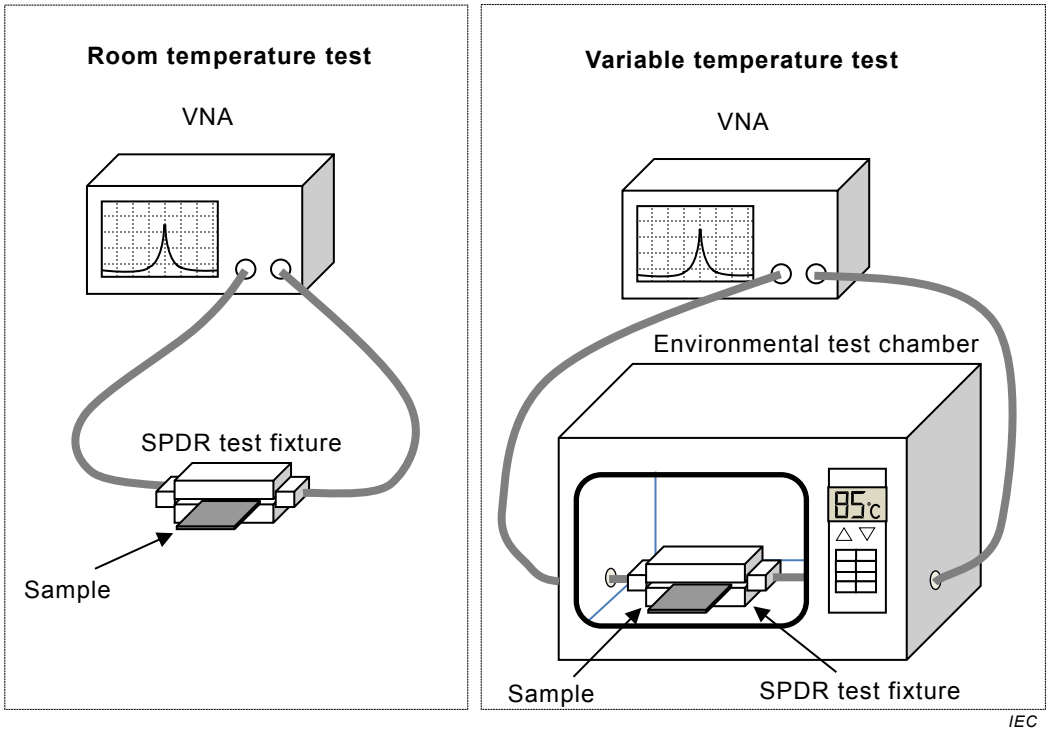

Figure 2 – Component diagram of test system

3.2 Vector network analyzer (VNA)

The following values are required:

a) The frequency range of VNA shall be 500 MHz to 20 GHz.

b) The dynamic range of VNA shall be more than 60 dB.

3.3 SPDR test fixture

3.3.1 General

Figure 1 shows the scheme of SPDR test fixture.

3.3.2 Parameters

Table 2 shows the typical relationship between the SPDR test fixture's nominal frequency and h_g and D.

3.3.3 Frequency

For different test frequencies, use a corresponding SPDR test fixture of nominal frequency.

Documents
Document Sharing Hub
Full document details: IEC 61189-2-721 2015

Table 2 – SPDR test fixture's parameter

SPDR test fixture's nominal frequency GHz	D mm	h_g mm
1,1	120	6,0
3	50	3,0
5 to 6	30	2,0
9 to 10	22	0,9
13 to 16	15	0,6
18 to 20	10	0,5

3.4 Verify unit

The verify unit includes the following:

a) Standard reference sample, for example, single-crystal quartz or equivalent sample.

b) A calibration assembly of VNA.

3.5 Micrometer

Micrometer with 0,001 mm resolution (or better).

3.6 Circulating oven

Circulating oven with stabilized temperature at 105^{+5}_{-2} °C.

3.7 Test chamber

For the environmental test chamber for variable temperature testing the following requirements apply:

a) Temperature ranges: –125 °C to +110 °C, other temperature range is as agreed between user and supplier.

b) Temperature accuracy-set point to actual: ±1 °C.

4 Procedure

4.1 Preconditioning

All specimens shall be conditioned at (23 ± 2) °C and (50 ± 5) % RH for at least 24 h prior to testing. However, if a specimen has recently been etched or exposed to excessive moisture, it should be dried in an air-circulating oven for 2 h at 105^{+5}_{-2} °C and then conditioned at the condition as mentioned above.

4.2 Testing of relative permittivity and loss tangent at room temperature

4.2.1 Test conditions

The ambient test temperature should be (23 ± 2) °C. The variation should not exceed 1 °C during the test.

4.2.2 Preparation

Allow at least 30 min for the VNA to warm up and stabilize.

Documents
Document Sharing Hub

Full document details: IEC 61189-2-721 2015

4.2.3 Fixture

Select an SPDR test fixture in accordance with the test frequency. The specimen size and thickness shall comply with the requirements specified in Table 1. For example, if the test frequency is 10 GHz, a SPDR test fixture with 10 GHz nominal frequency should be selected. The supported specimen size is 80 mm × 80 mm and the maximum thickness of specimens is no more than 0,9 mm.

4.2.4 Connection to VNA

Connect the SPDR test fixture to the VNA. The test fixture shall be kept horizontal.

4.2.5 VNA parameter

Set the VNA parameters according to the manufacturer's instructions and the nominal frequency of the SPDR fixture.

4.2.6 Frequency and Q-factor without specimen

Measure the resonance frequency (f_0) and Q-factor (Q_0) values of the empty resonator.

4.2.7 Micrometer

Utilize a micrometer to measure the thickness of the specimen and record as h.

4.2.8 Setting the specimen

Insert the specimen into the test fixture. The side with marking is face up and the edge of this side has to be aligned with the fixture edge.

4.2.9 Frequency and Q-factor with specimen

Measure the resonance frequency (f_s) and Q-factor (Q_s) of the resonator containing the specimen.

4.2.10 Comparison

The scheme of the change of resonance frequency with or without the specimen is shown in Figure 3.

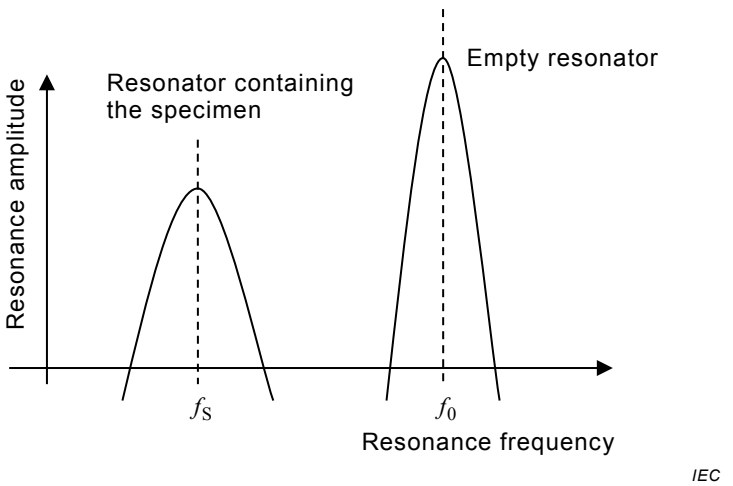

Figure 3 – Scheme of the change of resonance frequency with or without the specimen

Documents
Document Sharing Hub
Full document details: IEC 61189-2-721 2015

4.2.11 Calculation

4.2.11.1 General

Calculation of relative permittivity and loss tangent at room temperature.

Relative permittivity and loss tangent at room temperature shall be calculated as follows. It is recommended to use the computer software provided by the equipment supplier for calculation.

4.2.11.2 Relative permittivity

The relative permittivity (ε_r) shall be calculated according to Equation (1).

$$\varepsilon_r = 1 + \frac{f_0 - f_s}{h f_0 K_\varepsilon(\varepsilon_r, h)} \tag{1}$$

where

ε_r is relative permittivity;

h is the thickness of the specimen under test, in mm;

f_0 is the resonant frequency of the empty SPDR;

f_s is the resonant frequency of the resonator with the dielectric specimen;

$K_\varepsilon(\varepsilon_r, h)$ is a function of ε_r and h. For a fixed resonant cavity, its physical parameters (size, dielectric resonators ε_r) should have been identified. $K_\varepsilon(\varepsilon_r, h)$ is pre-computed and tabulated by electromagnetic field simulation with the strict Rayleigh-Ritz method. Put the empty SPDR frequency (f_0), the resonant frequency with dielectric specimen (f_s) and the thickness of the specimen (h) under test into Equation (1). Enter a similar arbitrary value of the relative permittivity of the sample, and use a successive approximation algorithm. After several iterations, end the calculation when the relative error of the last two calculated relative permittivities is less than 0,1 %. The last calculated data is taken as the relative permittivity of the specimen. Some additional information is shown in Annex B.

4.2.11.3 Loss tangent

The loss tangent shall be calculated according to Equation (2).

$$\tan\delta = \frac{\left(Q_S^{-1} - Q_{DR}^{-1} - Q_C^{-1}\right)}{p_{es}} \tag{2}$$

where

$\tan\delta$ is the loss tangent;

Q_s is the unloaded Q-factor of a resonant fixture containing the specimen;

Q_c is the Q-factor depending on metal losses for the resonant fixture containing the specimen;

Q_{DR} is the Q-factor depending on dielectric losses in the dielectric posts for the fixture containing the specimen;

p_{es} is the electromagnetic energy filling factor of the specimen. After identifying the physical parameters of the resonant cavity, the electromagnetic energy filling factor p_{es} can be determined by electromagnetic field simulation. For a fixed resonant cavity, p_{es} is a constant value. Some additional information is showed in Annex B.

Documents
Document Sharing Hub
Full document details: IEC 61189-2-721 2015

4.2.12 Change the specimen

Measure the two remaining specimens by repeating steps 4.2.6 through 4.2.11.

4.2.13 Change in test frequency

If another test frequency is selected, change the SPDR test fixture in accordance with the test frequency. Then repeat steps 4.2.3 through 4.2.12.

4.3 Testing of relative permittivity and loss tangent at variable temperatures

4.3.1 Test conditions

The ambient test temperature should be (23 ± 2) °C. The variation should not exceed 1 °C during the test.

4.3.2 Preparation

Allow at least 30 min for the VNA to warm up.

4.3.3 Fixture

Select an SPDR test fixture in accordance with the test frequency. The specimen size and thickness shall comply with the requirements specified in Table 1. For example, if the test frequency is 10 GHz, an SPDR test fixture with 10 GHz nominal frequency should be selected. The supported specimen size is 80 mm × 80 mm and the maximum thickness of the specimen is no more than 0,9 mm.

4.3.4 Connection to VNA

Connect the SPDR test fixture to the VNA. The test fixture shall be kept in a horizontal position in the test chamber.

4.3.5 VNA parameter

Set the VNA parameters according to the manufacturer's instructions and the nominal frequency of the SPDR fixture.

4.3.6 Temperature in the chamber

Adjust the test temperature of the test chamber. After reaching the set temperature (T), hold it for at least 15 min.

4.3.7 Frequency and Q-factor without specimen

Measure the resonance frequency $f_0(T)$ and Q-factor $Q_0(T)$ of the empty resonator.

The resonance peak should be between –40 dB and –45 dB; adjust the position of the coupling loops to achieve this whilst ensuring their position is symmetrical.

When measuring the Q-factor, the frequency span of the VNA should be adjusted such that it is between 110 % and 200 % of the full width at half maximum of the resonant curve.

4.3.8 Micrometer

Use a micrometer to measure the thickness of the specimen, and record as h.

Documents
Document Sharing Hub
Full document details: IEC 61189-2-721 2015

4.3.9 Setting of the specimen

The environmental test chamber shall be returned to room temperature. Insert the specimen into the test fixture. The side with marking is face up and the edge of this side has to be aligned with the fixture edge.

4.3.10 Frequency and Q-factor with specimen

Repeat step 4.3.6. Measure the resonance frequency $f_s(T)$ and Q-factor $Q_s(T)$ of the resonator with the specimen at temperature T.

When measuring the Q-factor, the frequency span of the VNA should be adjusted such that it is between 110 % and 200 % of the full width at half maximum of the resonant curve.

4.3.11 Calculation

Follow step 4.2.11 and calculate the value of the relative permittivity $Dk(T)$ and the loss tangent $Df(T)$ at temperature T.

4.3.12 Options

If another test temperature is selected, repeat steps 4.3.6 through 4.3.11.

4.3.13 Thermal coefficient

4.3.13.1 General

Thermal coefficient of relative permittivity and thermal coefficient of loss tangent.

4.3.13.2 Relative permittivity

The thermal coefficient of the relative permittivity ε_r (brief for $TC\varepsilon_r$) is the change rate of the relative permittivity per temperature change. The unit of $TC\varepsilon_r$ is 10^{-6}/°C. Generally, the relative permittivity of a specimen at its base temperature T_{ref} of 23 °C is used as the base relative permittivity $Dk(T_{ref})$. For temperature T, $TC\varepsilon_r$ shall be calculated according to Equation (3).

$$TC\varepsilon_r = \frac{Dk(T) - Dk(T_{ref})}{(T - T_{ref}) \times Dk(T_{ref})} \tag{3}$$

where

$TC\varepsilon_r$ is the thermal coefficient of ε_r, 10^{-6}/°C;

T is the test temperature, in °C;

T_{ref} is the base temperature, in °C;

$Dk(T)$ is the relative permittivity at temperature T;

$Dk(T_{ref})$ is the relative permittivity at temperature T_{ref}.

4.3.13.3 Loss tangent

The Thermal coefficient of tanδ (TC tanδ) is the change rate of the loss tangent per temperature (every increase or decrease 1 °C). The unit of TC tanδ is 10^{-6}/°C. Generally, the loss tangent of the specimen at base temperature T_{ref} of 23 °C is used as the base loss tangent $Df(T_{ref})$. For temperature T, TC tanδ is calculated according to Equation (4).

$$TC \tan\delta = \frac{Df(T) - Df(T_{ref})}{(T - T_{ref}) \times Df(T_{ref})} \tag{4}$$

AVA Documents
Document Sharing Hub
Full document details: IEC 61189-2-721 2015