IEC 61191-2

Edition 2.0 2013-06

# INTERNATIONAL STANDARD

# NORME INTERNATIONALE

Withdrawn

## Printed board assemblies – Part 2: Sectional specification – Requirements for surface mount soldered assemblies

## Ensembles de cartes imprimées – Partie 2: Spécification intermédiaire – Exigences relatives à l'assemblage par brasage pour montage en surface

IEC 61191-2:2013

Documents
Document Sharing Hub

Full document details: IEC 61191-2 2013

**THIS PUBLICATION IS COPYRIGHT PROTECTED**

**Copyright © 2013 IEC, Geneva, Switzerland**

All rights reserved. Unless otherwise specified, no part of this publication may be reproduced or utilized in any form or by any means, electronic or mechanical, including photocopying and microfilm, without permission in writing from either IEC or IEC's member National Committee in the country of the requester.
If you have any questions about IEC copyright or have an enquiry about obtaining additional rights to this publication, please contact the address below or your local IEC member National Committee for further information.

Droits de reproduction réservés. Sauf indication contraire, aucune partie de cette publication ne peut être reproduite ni utilisée sous quelque forme que ce soit et par aucun procédé, électronique ou mécanique, y compris la photocopie et les microfilms, sans l'accord écrit de la CEI ou du Comité national de la CEI du pays du demandeur.
Si vous avez des questions sur le copyright de la CEI ou si vous désirez obtenir des droits supplémentaires sur cette publication, utilisez les coordonnées ci-après ou contactez le Comité national de la CEI de votre pays de résidence.

IEC Central Office
3, rue de Varembé
CH-1211 Geneva 20
Switzerland

Tel.: +41 22 919 02 11
Fax: +41 22 919 03 00
info@iec.ch
www.iec.ch

## About the IEC

The International Electrotechnical Commission (IEC) is the leading global organization that prepares and publishes International Standards for all electrical, electronic and related technologies.

## About IEC publications

The technical content of IEC publications is kept under constant review by the IEC. Please make sure that you have the latest edition, a corrigenda or an amendment might have been published.

**Useful links:**

IEC publications search - www.iec.ch/searchpub

The advanced search enables you to find IEC publications by a variety of criteria (reference number, text, technical committee,…).
It also gives information on projects, replaced and withdrawn publications.

IEC Just Published - webstore.iec.ch/justpublished

Stay up to date on all new IEC publications. Just Published details all new publications released. Available on-line and also once a month by email.

Electropedia - www.electropedia.org

The world's leading online dictionary of electronic and electrical terms containing more than 30 000 terms and definitions in English and French, with equivalent terms in additional languages. Also known as the International Electrotechnical Vocabulary (IEV) on-line.

Customer Service Centre - webstore.iec.ch/csc

If you wish to give us your feedback on this publication or need further assistance, please contact the Customer Service Centre: csc@iec.ch.

---

## A propos de la CEI

La Commission Electrotechnique Internationale (CEI) est la première organisation mondiale qui élabore et publie des Normes internationales pour tout ce qui a trait à l'électricité, à l'électronique et aux technologies apparentées.

## A propos des publications CEI

Le contenu technique des publications de la CEI est constamment revu. Veuillez vous assurer que vous possédez l'édition la plus récente, un corrigendum ou amendement peut avoir été publié.

**Liens utiles:**

Recherche de publications CEI - www.iec.ch/searchpub

La recherche avancée vous permet de trouver des publications CEI en utilisant différents critères (numéro de référence, texte, comité d'études,…).
Elle donne aussi des informations sur les projets et les publications remplacées ou retirées.

Just Published CEI - webstore.iec.ch/justpublished

Restez informé sur les nouvelles publications de la CEI. Just Published détaille les nouvelles publications parues. Disponible en ligne et aussi une fois par mois par email.

Electropedia - www.electropedia.org

Le premier dictionnaire en ligne au monde de termes électroniques et électriques. Il contient plus de 30 000 termes et définitions en anglais et en français, ainsi que les termes équivalents dans les langues additionnelles. Egalement appelé Vocabulaire Electrotechnique International (VEI) en ligne.

Service Clients - webstore.iec.ch/csc

Si vous désirez nous donner des commentaires sur cette publication ou si vous avez des questions contactez-nous: csc@iec.ch.

Withdrawn

Documents
Document Sharing Hub

Full document details: IEC 61191-2 2013

# IEC 61191-2

Edition 2.0 2013-06

# INTERNATIONAL STANDARD

# NORME INTERNATIONALE

Withdrawn

## Printed board assemblies – Part 2: Sectional specification – Requirements for surface mount soldered assemblies

## Ensembles de cartes imprimées – Partie 2: Spécification intermédiaire – Exigences relatives à l'assemblage par brasage pour montage en surface

INTERNATIONAL ELECTROTECHNICAL COMMISSION

COMMISSION ELECTROTECHNIQUE INTERNATIONALE

PRICE CODE
CODE PRIX U

ICS 31.190; 31.240

ISBN 978-2-83220-856-4

**Warning! Make sure that you obtained this publication from an authorized distributor.**
**Attention! Veuillez vous assurer que vous avez obtenu cette publication via un distributeur agréé.**

AVA Documents
Document Sharing Hub

® Registered trademark of the International Electrotechnical Commission
Marque déposée de la Commission Electrotechnique Internationale

Full document details: IEC 61191-2 2013

CONTENTS

FOREWORD ..... 4
1 Scope ..... 6
2 Normative references ..... 6
3 Conventions ..... 6
4 General requirements ..... 6
5 Classification ..... 6
6 Surface mounting of components ..... 7
6.1 General ..... 7
6.2 Alignment requirements ..... 7
6.3 Process control ..... 7
6.4 Surface mounted component requirements ..... 7
6.5 Flatpack lead forming ..... 7
6.5.1 General ..... 7
6.5.2 Surface mounted device lead bends ..... 8
6.5.3 Surface mounted device lead deformation ..... 8
6.5.4 Flattened leads ..... 8
6.5.5 Dual-in-line packages (DIPs) ..... 8
6.5.6 Parts not configured for surface mounting ..... 9
6.6 Small devices with two terminations ..... 9
6.6.1 General ..... 9
6.6.2 Stack mounting ..... 9
6.6.3 Devices with external deposited elements ..... 9
6.7 Lead component body positioning ..... 9
6.7.1 General ..... 9
6.7.2 Axial-leaded components ..... 9
6.7.3 Other components ..... 9
6.8 Parts configured for butt lead mounting ..... 9
6.9 Non-conductive adhesive coverage limits ..... 10
7 Acceptance requirements ..... 10
7.1 General ..... 10
7.2 Control and corrective actions ..... 10
7.3 Surface soldering of leads and terminations ..... 10
7.3.1 General ..... 10
7.3.2 Solder fillet height and heel fillets ..... 10
7.3.3 Flat ribbon L and gull-wing leads ..... 13
7.3.4 Round or flattened (coined) leads ..... 13
7.3.5 J leads ..... 15
7.3.6 Rectangular or square end components ..... 16
7.3.7 Cylindrical end cap terminations ..... 17
7.3.8 Bottom only terminations ..... 18
7.3.9 Leadless chip carriers with castellated terminations ..... 19
7.3.10 Butt joints ..... 20
7.3.11 Inward L-shaped ribbon leads ..... 21
7.3.12 Flat lug leads ..... 22
7.4 General post-soldering requirements applicable to all surface-mounted assemblies ..... 23

Withdrawn

AVA Documents
Document Sharing Hub

7.4.1 Dewetting ... 23
7.4.2 Leaching ... 23
7.4.3 Pits, voids, blowholes, and cavities ... 23
7.4.4 Solder wicking ... 23
7.4.5 Solder webs and skins ... 23
7.4.6 Bridging ... 23
7.4.7 Degradation of marking ... 23
7.4.8 Solder spikes ... 23
7.4.9 Disturbed joint ... 23
7.4.10 Component damage ... 24
7.4.11 Open circuit, non-wetting ... 24
7.4.12 Component tilting ... 24
7.4.13 Non-conducting adhesive encroachment ... 24
7.4.14 Open circuit, no solder available (skip) ... 24
7.4.15 Component on edge ... 24
8 Rework and repair ... 24
Annex A (normative) Placement requirements for surface mounted devices ... 26

Figure 1 – Lead formation for surface mounted device ... 8
Figure 2 – Fillet height ... 12
Figure 3 – Flat ribbon L and gull-wing leads ... 13
Figure 4 – Round or flattened (coined) lead joint ... 14
Figure 5 – J lead joint ... 15
Figure 6 – Rectangular or square end components ... 16
Figure 7 – Cylindrical end-cap terminations ... 17
Figure 8 – Bottom only terminations ... 18
Figure 9 – Leadless chip carriers with castellated terminations ... 19
Figure 10 – Butt joints ... 20
Figure 11 – Inward L-shaped ribbon leads ... 21
Figure 12 – Flat lug leads ... 22

Table 1 – Surface mounted solder joint defects ... 25

Withdrawn

Documents
Document Sharing Hub
Full document details: IEC 61191-2 2013

INTERNATIONAL ELECTROTECHNICAL COMMISSION

# PRINTED BOARD ASSEMBLIES –

## Part 2: Sectional specification – Requirements for surface mount soldered assemblies

## FOREWORD

1) The International Electrotechnical Commission (IEC) is a worldwide organization for standardization comprising all national electrotechnical committees (IEC National Committees). The object of IEC is to promote international co-operation on all questions concerning standardization in the electrical and electronic fields. To this end and in addition to other activities, IEC publishes International Standards, Technical Specifications, Technical Reports, Publicly Available Specifications (PAS) and Guides (hereafter referred to as "IEC Publication(s)"). Their preparation is entrusted to technical committees; any IEC National Committee interested in the subject dealt with may participate in this preparatory work. International, governmental and non-governmental organizations liaising with the IEC also participate in this preparation. IEC collaborates closely with the International Organization for Standardization (ISO) in accordance with conditions determined by agreement between the two organizations.
2) The formal decisions or agreements of IEC on technical matters express, as nearly as possible, an international consensus of opinion on the relevant subjects since each technical committee has representation from all interested IEC National Committees.
3) IEC Publications have the form of recommendations for international use and are accepted by IEC National Committees in that sense. While all reasonable efforts are made to ensure that the technical content of IEC Publications is accurate, IEC cannot be held responsible for the way in which they are used or for any misinterpretation by any end user.
4) In order to promote international uniformity, IEC National Committees undertake to apply IEC Publications transparently to the maximum extent possible in their national and regional publications. Any divergence between any IEC Publication and the corresponding national or regional publication shall be clearly indicated in the latter.
5) IEC itself does not provide any attestation of conformity. Independent certification bodies provide conformity assessment services and, in some areas, access to IEC marks of conformity. IEC is not responsible for any services carried out by independent certification bodies.
6) All users should ensure that they have the latest edition of this publication.
7) No liability shall attach to IEC or its directors, employees, servants or agents including individual experts and members of its technical committees and IEC National Committees for any personal injury, property damage or other damage of any nature whatsoever, whether direct or indirect, or for costs (including legal fees) and expenses arising out of the publication, use of, or reliance upon, this IEC Publication or any other IEC Publications.
8) Attention is drawn to the Normative references cited in this publication. Use of the referenced publications is indispensable for the correct application of this publication.
9) Attention is drawn to the possibility that some of the elements of this IEC Publication may be the subject of patent rights. IEC shall not be held responsible for identifying any or all such patent rights.

International Standard IEC 61191-2 has been prepared by IEC technical committee 91: Electronics assembly technology.

This second edition cancels and replaces the first edition, published in 1998, and constitutes a technical revision.

This edition includes the following significant technical changes with respect to the previous edition:

– IPC-A-610 on workmanship has been included as a normative reference;
– some of the terminology used in the document has been updated;
– references to IEC standards have been corrected;
– the use of lead-free solder paste and plating are addressed.

Withdrawn

Documents
Document Sharing Hub

The text of this standard is based on the following documents:

| FDIS | Report on voting |
|---|---|
| 91/1091/FDIS | 91/1103/RVD |

Full information on the voting for the approval of this standard can be found in the report on voting indicated in the above table.

This publication has been drafted in accordance with the ISO/IEC Directives, Part 2.

A list of all parts of IEC 61191 under the general title *Printed board assemblies* can be found in the IEC website.

The committee has decided that the contents of this publication will remain unchanged until the stability date indicated on the IEC web site under "http://webstore.iec.ch" in the data related to the specific publication. At this date, the publication will be

- reconfirmed,
- withdrawn,
- replaced by a revised edition, or
- amended.

withdrawn

Documents
Document Sharing Hub

Full document details: IEC 61191-2 2013

# PRINTED BOARD ASSEMBLIES –

## Part 2: Sectional specification – Requirements for surface mount soldered assemblies

Withdrawn

## 1 Scope

This part of IEC 61191 gives the requirements for surface mount solder connections. The requirements pertain to those assemblies that are totally surface mounted or to the surface mounted portions of those assemblies that include other related technologies (e.g. through-hole, chip mounting, terminal mounting, etc.).

## 2 Normative references

The following documents, in whole or in part, are normatively referenced in this document and are indispensable for its application. For dated references, only the edition cited applies. For undated references, the latest edition of the referenced document (including any amendments) applies.

IEC 61191-1:2013, *Printed board assemblies – Part 1: Generic specification – Requirements for soldered electrical and electronic assemblies using surface mount and related assembly technologies*

IPC-A-610E:2010, *Acceptability of Electronic Assemblies*

## 3 Conventions

Unless otherwise specified by the user, the word "shall" signifies that the requirement is mandatory. Deviations from any "shall" requirement requires written acceptance by the user, e.g. via assembly drawing, specification or contract provision.

The word “should” is used to indicate a recommendation or guidance statement. The word “may” indicates an optional situation. Both “should” and “may” express non-mandatory situations. “Will” is used to express a declaration of purpose.

## 4 General requirements

Clause 4 of IEC 61191-1:2013 is a mandatory part of this standard.

Workmanship of surface mount assemblies shall meet the requirements of IPC-A-610E in accordance with the classification requirements of this standard.

## 5 Classification

This standard recognizes that electrical and electronic assemblies are subject to classifications by intended end-item use. Three general end-product classes have been established to reflect differences in producibility, complexity, functional performance requirements, and verification (inspection/test) frequency. These are the following:

Level A: General electronic products

Level B: Dedicated service electronic products

Documents
Document Sharing Hub

Full document details: IEC 61191-2 2013

Level C: High performance electronic products

The user of the assemblies is responsible for determining the level to which his product belongs. It should be recognized that there may be overlaps of equipment between levels. The contract shall specify the level required and indicate any exceptions or additional requirements to the parameters, where appropriate (see 4.3 of IEC 61191-1:2013).

## 6 Surface mounting of components

### 6.1 General

This clause covers assembly of components that are placed on the surface to be manually or machine soldered and includes components designed for surface mounting as well as through-hole components that have been adapted for surface mounting technology.

### 6.2 Alignment requirements

Sufficient process control at all stages of design and assembly shall be in place to enable the post-soldering alignments and solder joint fillet controls specified in 7.3 to be achieved.

Relevant factors affecting the requirements include land and conductor design, component proximities, component and land solderability, solder paste/adhesive quantity and alignment and component placement accuracy.

### 6.3 Process control

If suitable process controls are not in place to ensure compliance with 6.2 and the intent of Annex A, the detailed requirements of Annex A shall be mandatory.

### 6.4 Surface mounted component requirements

The leads of lead surface mounted components shall be formed to their final configuration prior to mounting. Leads shall be formed in such a manner that the lead-to-body seal is not damaged or degraded and that they may be soldered into place by subsequent processes which do not result in residual stresses decreasing reliability. When the leads of dual-in-line packages, flatpacks, and other multilead devices become misaligned during processing or handling, they may be straightened to ensure parallelism and alignment prior to mounting, while maintaining the lead-to-body seal integrity.

### 6.5 Flatpack lead forming

#### 6.5.1 General

Leads on opposite sides of surface mounted flatpacks shall be formed such that the non-parallelism between the base surface of the component and the surface of the printed board (i.e. component cant) is minimal. Component cant is permissible provided the final configuration does not exceed the maximum spacing limit of 2,0 mm (see Figure 1).

Withdrawn

Documents
Document Sharing Hub

Full document details: IEC 61191-2 2013

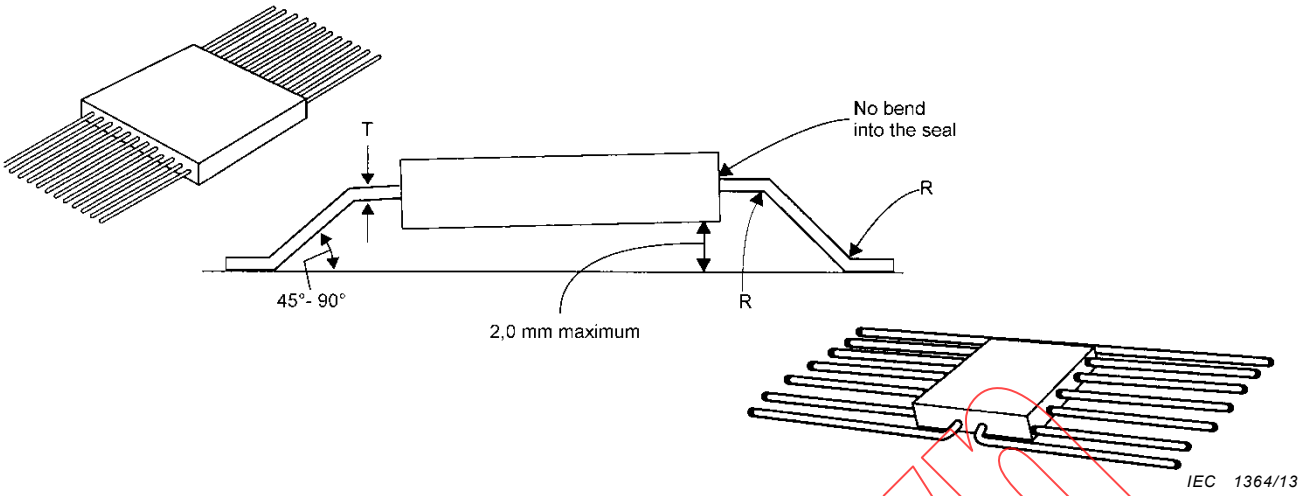


**Figure 1 – Lead formation for surface mounted device**

### 6.5.2 Surface mounted device lead bends

Leads shall be supported during forming to protect the lead-to-body seal. Bends shall not extend into the seal (see Figure 1). The lead-bend radius (*R*) shall be >1 *T* (*T* = nominal lead thickness). The angle of that part of the lead between the upper and lower bends in relation to the mounting land shall be 45° minimum and 90° maximum.

### 6.5.3 Surface mounted device lead deformation

Lead deformation (unintentional bending) may be allowed when

a) no evidence of a short circuit or potential short circuit exists,

b) lead-to-body seal or weld is not damaged by the deformation,

c) does not violate minimum electrical spacing requirement,

d) top of lead does not extend beyond the top of body; preformed stress loops may extend above the top of the body; however, stand-off height limit shall not be exceeded,

e) toe curl, if present on bends, shall not exceed two times the thickness of the lead (2 *T*),

f) coplanarity limits are not exceeded.

### 6.5.4 Flattened leads

Components with axial leads of round cross-section may be flattened (coined) for positive seating in surface mounting. If flattening is used, the flattened thickness shall be not less than 40 % of the original diameter. Flattened areas of leads shall be excluded from the 10 % deformation requirement in 6.5.3 of IEC 61191-1:2013.

Flattened leads on opposite sides of a surface mount part shall be formed such that the non-parallelism between the base surface of the component and the surface of the printed board (e.g., component cant) is minimal.

### 6.5.5 Dual-in-line packages (DIPs)

Dual-in-line packages may be surface mounted provided the leads are configured to meet the mounting requirements for surface mounted loaded parts. The lead preparation operation shall be performed using die forming/cutting systems. Hand forming and trimming of leads are prohibited.

Withdrawn

Documents
Document Sharing Hub
Full document details: IEC 61191-2 2013

### 6.5.6 Parts not configured for surface mounting

Flatpacks of the through-hole configuration, transistors, metal power packages, and other non-axial lead components shall not be surface mounted unless the leads are formed to meet the surface mounted device lead forming requirements. Such applications shall be agreed on between user and manufacturer.

## 6.6 Small devices with two terminations

### 6.6.1 General

The detailed requirements for mounting of small devices with two lead terminations are defined in the following subclauses.

### 6.6.2 Stack mounting

When part stacking is permitted by the assembly drawing, parts shall not bridge spacing between other parts or components such as terminals or other chip components.

### 6.6.3 Devices with external deposited elements

Components with electrical elements deposited on an external surface (such as chip resistors) shall be mounted with that surface facing away from the printed board or substrate.

## 6.7 Lead component body positioning

### 6.7.1 General

Parts mounted over protected surfaces and insulated parts that are positioned over circuitry or parts mounted over surfaces without exposed circuitry may be flush mounted (i.e. no stand-off height). Parts mounted over exposed circuitry shall have their leads formed to provide a minimum of 0,25 mm between the bottom of the component body and the exposed circuitry. The maximum clearance between the bottom of the leaded component body and the printed wiring surface shall not exceed 2,0 mm.

### 6.7.2 Axial-leaded components

The body of a surface mounted axial-leaded component should be spaced from the surface of the printed board at a maximum of 2,0 mm unless the component is mechanically attached to the substrate by adhesive or other means. Leads on opposite sides of surface mounted axial-leaded components shall be formed such that component cant (non-parallelism between the base surface of the mounted component and the surface of the printed board) is minimal and in no instance shall body cant result in non-conformance with maximum spacing limits.

### 6.7.3 Other components

TO-can devices, tall profile components (i.e. over 15 mm), transformers, and metal power packages may be surface mounted provided the parts are bonded or otherwise secured to the board in a manner which enables the part to withstand the end-item shock, vibration and environmental stresses.

## 6.8 Parts configured for butt lead mounting

Components designed for through hole (pin-in-hole) applications and modified for butt joint attachment, or stiff leaded dual-in-line packages may be butt mounted on level A and B products. Butt mounting is not permitted on level C products unless the component is designed for surface mounting.

Withdrawn

AVA Documents
Document Sharing Hub

Full document details: IEC 61191-2 2013

### 6.9 Non-conductive adhesive coverage limits

Non-conductive adhesive materials, when used for component mounting, shall not flow onto, or obscure, areas to be soldered or into vias or plated-through holes.

## 7 Acceptance requirements

### 7.1 General

Materials, processes, and procedures described and specified in IEC 61191-1 provide for soldered interconnections that are better than the minimum surface mount acceptance requirements in this clause. Processes and their control should be capable of producing product meeting or exceeding the acceptance criteria for defined product levels.

### 7.2 Control and corrective actions

The detailed requirements for acceptance, corrective action limits, control limit determination, and general assembly criteria described in IEC 61191-1 are a mandatory part of this standard. In addition, the following subclause shall be met for all surface mount assembly and for connection acceptability.

### 7.3 Surface soldering of leads and terminations

#### 7.3.1 General

Solder joints or terminations on components designed for surface mounting shall exhibit solder joints that meet the general descriptions of Clause 10 of IEC 61191-1:2013 with the specific measurements defined in 7.3.3 through 7.3.12 of this standard. Some surface mounted components will self-align during reflow soldering but a degree of misalignment is permitted to the extent specified. However, minimum design conductor spacing shall not be violated.

In the following paragraphs, certain joint features are unspecified in size and the only requirement is that a properly wetted fillet to both lead/termination and lands be visible. Geometric dimensions not called out with any requirements are considered non-critical to the performance of the interconnection.

Surface mounted joints formed to connector, socket, and other leads or terminations without mechanical support, subject to stress from insertion and withdrawal of components or printed boards shall meet the requirements of level C.

#### 7.3.2 Solder fillet height and heel fillets

##### 7.3.2.1 General

The height *F* of solder fillets, including heel fillets, as required in the following subclauses shall be judged by the distance the applied solder has risen up the joined surface. Figure 2 illustrates this measurement for joints of equal height but having different solder volume. In 7.3.3 to 7.3.12, for some lead configurations, the minimum acceptable fillet height criteria is referenced to the lead thickness *T*, or one half the thickness (0,5 *T*). When referenced to *T*, the height of the heel fillet to a formed lead shall be measured at the lowest point of the inside bend radius of the lead, as indicated by point A of Figure 2b (e.g. level C in Figures 3 to 5). When referenced to 0,5 *T*, the fillet may be 0,5 *T* lower (e.g. level B in Figures 3 to 5).

NOTE Subclause 7.3.3 provides an organization that combines the requirement paragraph, the appropriate Figure and a dimensional table that describes the specific details.

Withdrawn

Documents
Document Sharing Hub

Full document details: IEC 61191-2 2013

#### 7.3.2.2 Solder connection contours

A mounting technique shall be used to compensate for the coefficient of thermal expansion (CTE) mismatch of the part and board. This mounting technique shall be limited to part leads, specialized mounting devices, and normal solder connections. The use of specialized stand-offs mounted between the part and the land is permissible. Leadless components shall not be soldered into place utilizing redundant interconnect wiring between the component castellation and the land. When CTE mismatch compensation is provided, bottom only terminations and leadless chip carriers (see 7.3.8 and 7.3.9) are not required to have 0,2 mm solder thickness.

Designs which utilize special solder connection contours as part of a CTE mismatch compensation system shall be identified on the approval assembly drawing. The mounting technique shall be capable of performing with a solder connection which meets the requirements of this standard.

#### 7.3.2.3 Surface mount device lead heel position

The heel of a leaded component shall not overhang the land.

NOTE The heel begins where the lead starts to curve at the lead bend.

#### 7.3.2.4 Break-away tie bars

Components (e.g. connectors and flexible circuits) which incorporate break-away tie bars in their design may be installed or soldered in place prior to removal of the tie bar. Exposed basis metal resulting from tie bar removal is permissible.

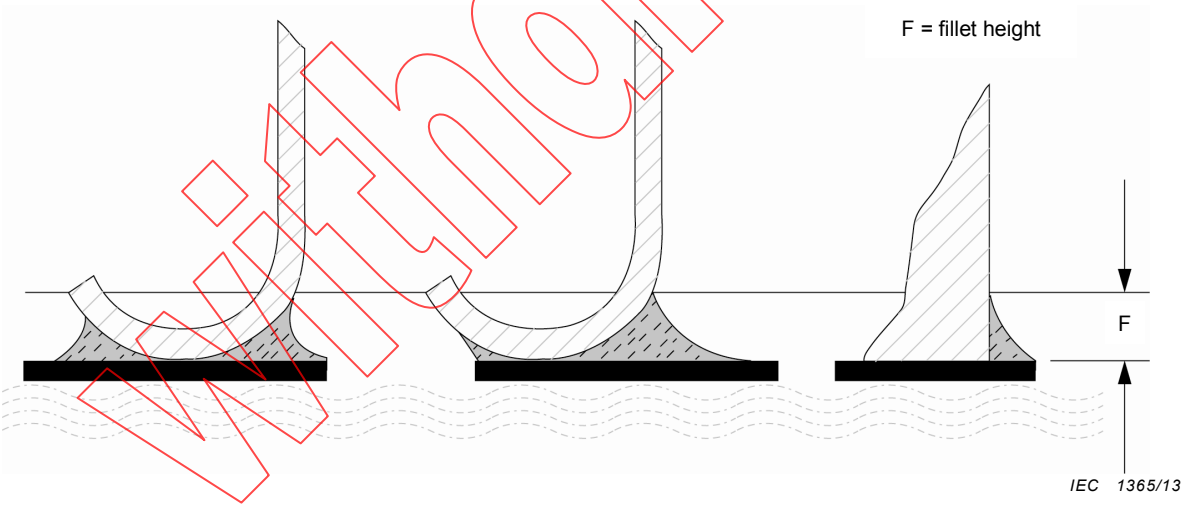


**Figure 2a – Fillet height**

Withdrawn

Documents
Document Sharing Hub
Full document details: IEC 61191-2 2013

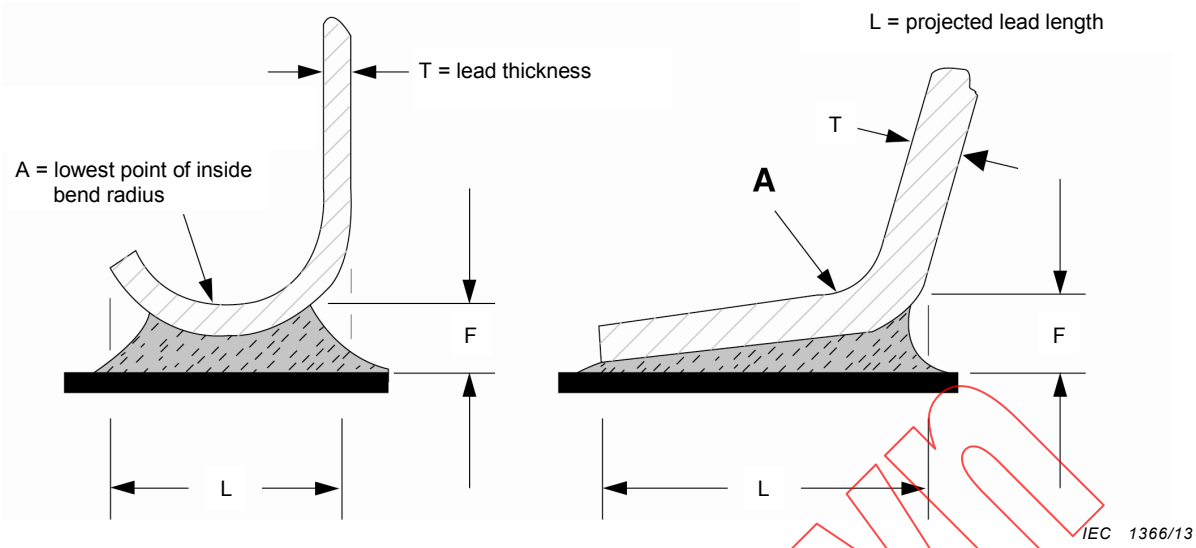


**Figure 2b – Fillet height referenced to lead thickness**

**Figure 2 – Fillet height**

Withdrawn

Documents
Document Sharing Hub
Full document details: IEC 61191-2 2013

### 7.3.3 Flat ribbon L and gull-wing leads

Solder joints between substrate lands and flat ribbon leads formed into L, and gull wing shape component leads of either stiff or flexible materials shall meet the alignment and solder fillet requirements of Figure 3 for each product level.

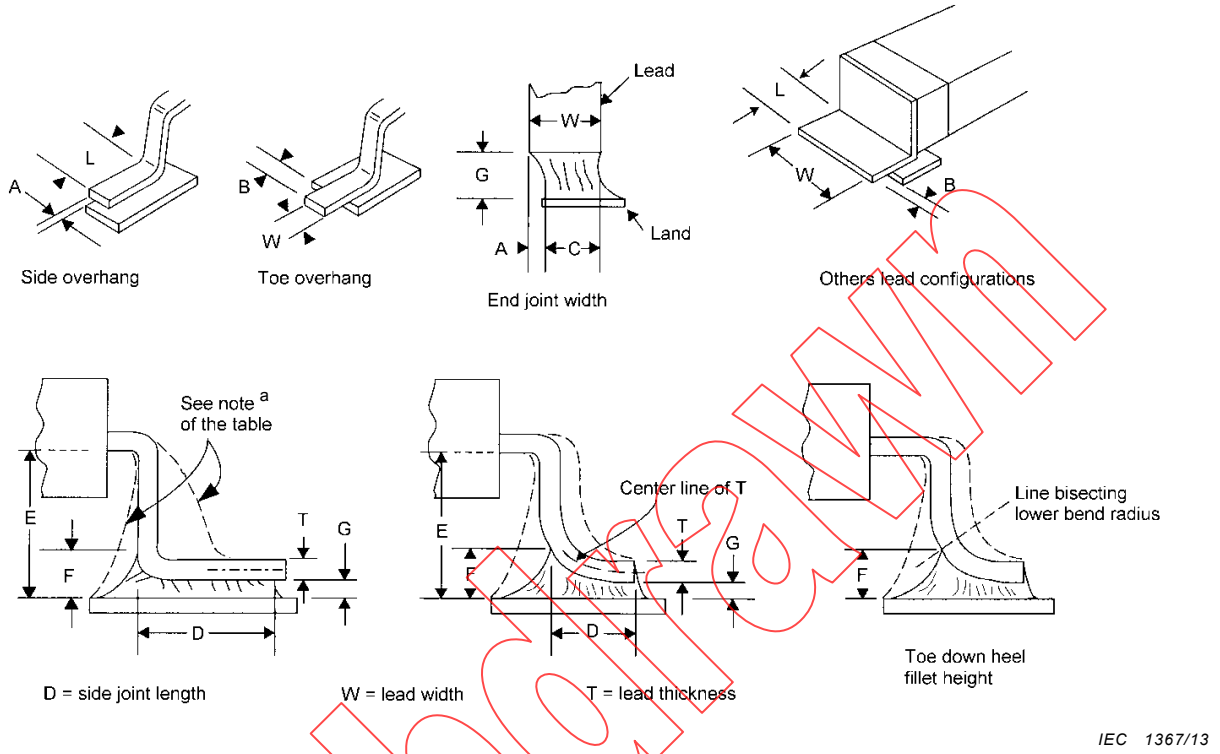


*Dimensions in millimetres*

| Feature | Dimension | Level A | Level B | Level C |
|---|---|---|---|---|
| Maximum side overhang | *A* | 1/2 *W* or 0,5 [d] whichever is less; 1/3 *W* below 0,5 mm pitch devices | 1/2 W or 0,5 [d] whichever is less; 1/3 W below 0,5 mm pitch devices | 1/4 W or 0,5 [d] whichever is less |
| Maximum toe overhang | *B* | 1/2 *W* [d] | Not permitted | Not permitted |
| Minimum end joint width [c] | *C* | *W* – *A* | *W* – *A* | *W* – *A* |
| Minimum side joint length [b, c] | *D* | 1/2 *L* | 2/3 *L* | 3/4 *L* |
| Maximum heel fillet height | *E* | e a | a | a |
| Minimum heel fillet height | *F* | e | *G* + 1/2 *T* | *G* + *T* |
| Minimum solder thickness | *G* | e | e | e |
| For lead frames made of Fe-Ni alloy 42 the next higher level should be chosen. | | | | |

[a] Solder fillets for levels A and B may extend through the top bend.

[b] Leads not having wettable sides or ends by design (such as leads stamped or sheared from prepared stock) are not required to have side or end fillets, but side overhang is not permitted (all levels).

[c] Devices with *W* greater than *D* shall be exempted from the side joint requirements of this table.

[d] Shall not violate minimum design conductor spacing.

[e] Properly wetted fillet evident.

**Figure 3 – Flat ribbon L and gull-wing leads**

### 7.3.4 Round or flattened (coined) leads

Joints formed to round or flattened (coined) leads shall meet the dimensional and fillet requirements of Figure 4 for each product level.

Withdrawn
AVA Documents Document Sharing Hub
Full document details: IEC 61191-2 2013

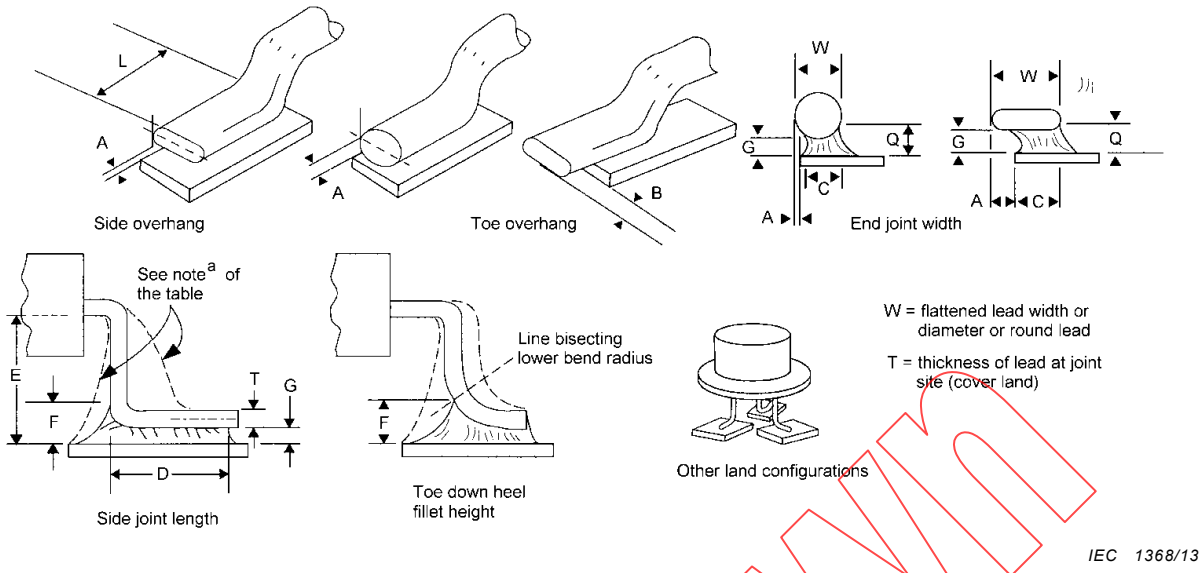


*Dimensions in millimetres*

| Feature | Dimension | Level [a] | Level B [b] | Level C |
|---|---|---|---|---|
| Maximum side overhang | *A* | 1/3 *W* | 1/3 *W* | 1/4 *W* |
| Maximum toe overhang | *B* | [b] | [b] | [b] |
| Minimum end joint width | *C* | [c] | [c] | *W* – *A* |
| Minimum side joint length | *D* | 1/2 *L* | 2/3 *L* | 3/4 *L* |
| Maximum heel fillet height | *E* | [a] | [a] | [a] |
| Minimum heel fillet height | *F* | [c] | *G* + 1/2 *T* | *G* + *T* |
| Minimum solder thickness | *G* | [c] | [c] | [c] |
| Minimum side joint height | *Q* | [c] | *G* + 1/2 *T* or *G* + 0,5 whichever is less | *G* + 1/2 T or *G* + 0,5 whichever is less |

[a] Solder fillet for levels A and B may extend through the top bend. Solder should not extend under the body of low profile surface mount components whose leads are made of Fe-Ni alloy 42 or similar metals.

[b] Shall not violate minimum design conductor spacing.

[c] Properly wetted fillet evident.

**Figure 4 – Round or flattened (coined) lead joint**

Withdrawn

AVA Documents Document Sharing Hub

### 7.3.5 J leads

Joints formed to leads having a J shape at the joint site shall meet the dimensional and fillet requirements of Figure 5 for each product level.

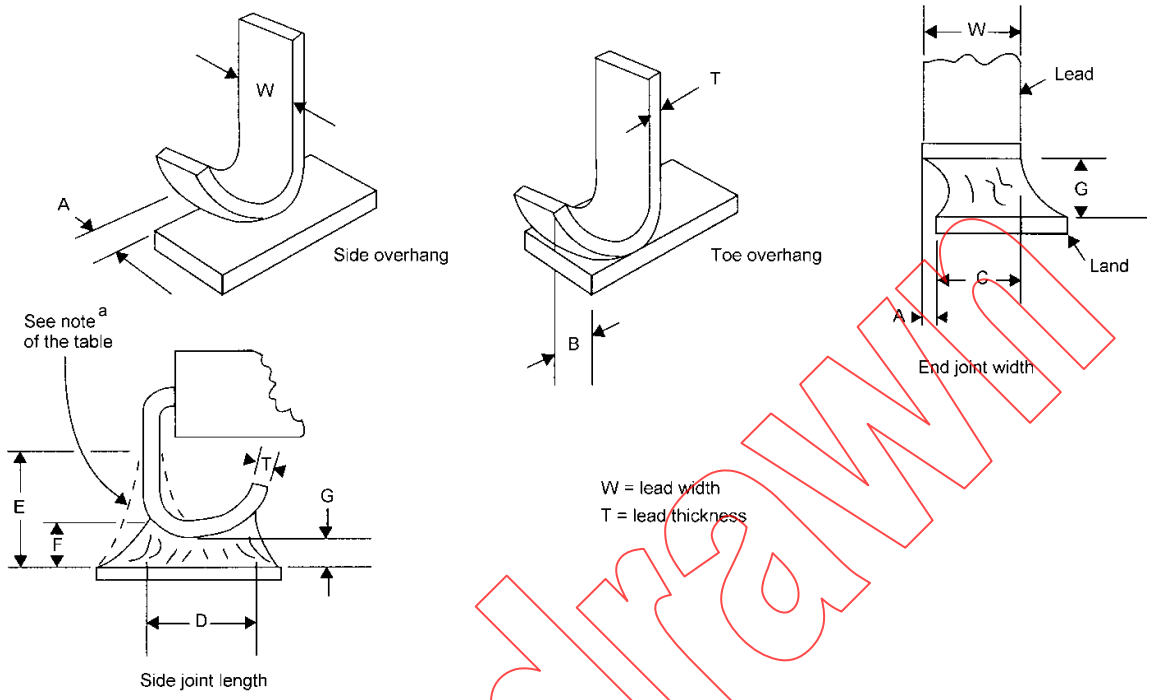


IEC 1369/13

*Dimensions in millimetres*

| Feature | Dimension | Level A | Level B | Level C |
|---|---|---|---|---|
| Maximum side overhang [f] | *A* | 1/2 *W* | 1/2 *W* | 1/4 *W* |
| Maximum toe overhang | *B* | [c f] | [a f] | [a f] |
| Minimum end joint width | *C* | [d] | *W* – *A* | *W* – *A* |
| Minimum side joint length [e] | *D* | [d] | 1 1/2 *W* | 1 1/2 *W* |
| Maximum fillet height | *E* | [a] | [a] | [a] |
| Minimum fillet height | *F* | [b, d] | $G + 1/2\ T^2$ | $G + T^2$ |
| Minimum solder thickness | *G* | [d] | [d] | [d] |

[a] Maximum solder fillet should not touch package body.

[b] Maximum height to bend radius shall not exceed 2 *T*. Fillets shall be furnished on both toe and heel area of J-lead.

[c] Unspecified parameter.

[d] Properly wetted fillet evident.

[e] Leads not having wettable sides by design (such as leads stamped from pre-plated stock) are not required to have side fillets.

[f] Shall not violate minimum design conductor spacing.

**Figure 5 – J lead joint**

Withdrawn

Documents
Document Sharing Hub
Full document details: IEC 61191-2 2013

### 7.3.6 Rectangular or square end components

Solder joints to components having terminations of a square or rectangular configuration shall meet the dimensional and solder fillet requirements of Figure 6 for each product level.

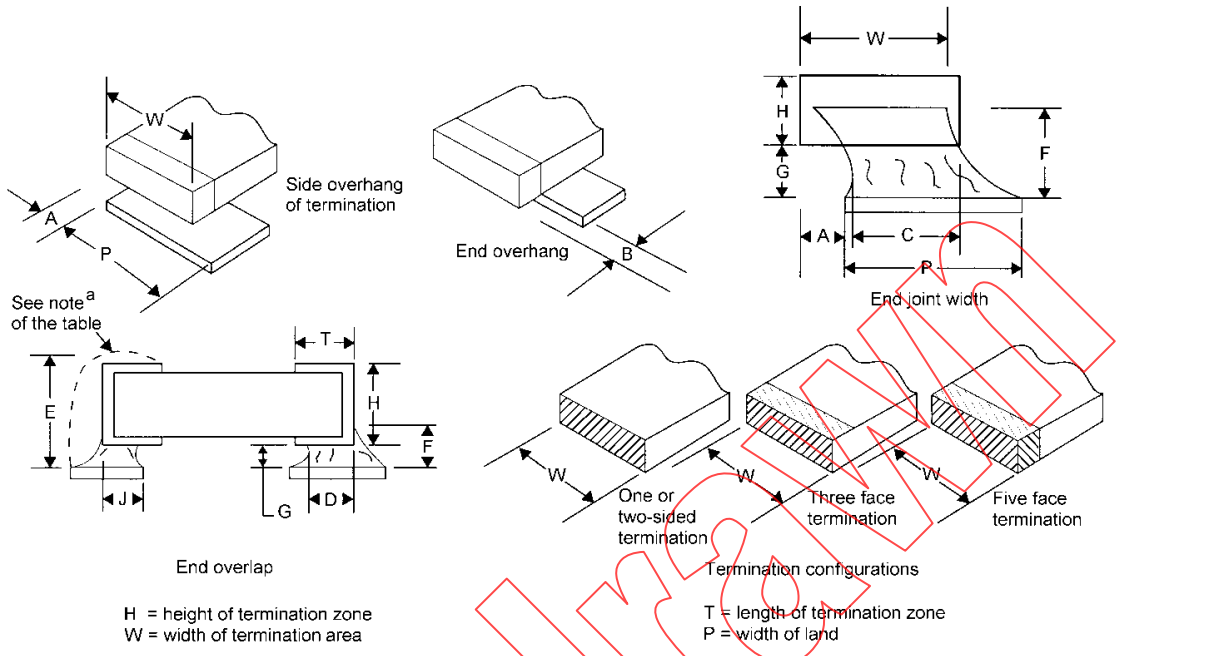


*Dimensions in millimetres*

| Feature | Dimension | Level A | Level B | Level C |
|---|---|---|---|---|
| Maximum side overhang [e] | *A* | 1/2 *W* or 1,5 whichever is less | 1/3 W or 1,5 whichever is less | 1/4 *W* or 1,5 whichever is less |
| End overhang | *B* | Not permitted | Not permitted | Not permitted |
| Minimum end joint width | *C* | 1/2 *W* | 1/2 *W* | 3/4 *W* |
| Minimum side joint length [c] | *D* | [d] | 1/2 *T* | 3/4 *T* |
| Maximum fillet height [a] | *E* | [a] | [a] | [a] |
| Minimum fillet height | *F* | [d] | *G* + 1/4 *H* or *G* + 0,5 whichever is less | *G* + 1/4 *H* or *G* + 0,5 whichever is less |
| Minimum solder thickness [b] | *G* | [d] | [d] | 0,2 [b] |
| Minimum end overlap [c] | *J* | 2/3 *T* | 2/3 *T* | 3/4 *T* |

[a] The maximum fillet may overhang the land or extend onto the top of the end cap metallization; however, the solder shall not extend further onto the component body.

[b] Unless satisfactory cleaning can be demonstrated with reduced clearance. *G* is not specified when cleaning is not required.

[c] Not required for one face only termination type components.

[d] Properly wetted fillet evident.

[e] Shall not violate minimum design conductor spacing.

**Figure 6 – Rectangular or square end components**

Withdrawn

AVA Documents Document Sharing Hub

Full document details: IEC 61191-2 2013