IEC 61191-3

Edition 2.0 2017-05

INTERNATIONAL STANDARD

NORME INTERNATIONALE

Printed board assemblies – Part 3: Sectional specification – Requirements for through-hole mount soldered assemblies

Ensembles de cartes imprimées – Partie 3: Spécification intermédiaire – Exigences relatives à l'assemblage par brasage de trous traversants

IEC 61191-3:2017-05(en-fr)

Documents
Document Sharing Hub
Full document details: IEC 61191-3-2017

THIS PUBLICATION IS COPYRIGHT PROTECTED
Copyright © 2017 IEC, Geneva, Switzerland

All rights reserved. Unless otherwise specified, no part of this publication may be reproduced or utilized in any form or by any means, electronic or mechanical, including photocopying and microfilm, without permission in writing from either IEC or IEC's member National Committee in the country of the requester. If you have any questions about IEC copyright or have an enquiry about obtaining additional rights to this publication, please contact the address below or your local IEC member National Committee for further information.

Droits de reproduction réservés. Sauf indication contraire, aucune partie de cette publication ne peut être reproduite ni utilisée sous quelque forme que ce soit et par aucun procédé, électronique ou mécanique, y compris la photocopie et les microfilms, sans l'accord écrit de l'IEC ou du Comité national de l'IEC du pays du demandeur. Si vous avez des questions sur le copyright de l'IEC ou si vous désirez obtenir des droits supplémentaires sur cette publication, utilisez les coordonnées ci-après ou contactez le Comité national de l'IEC de votre pays de résidence.

IEC Central Office
3, rue de Varembé
CH-1211 Geneva 20
Switzerland

Tel.: +41 22 919 02 11
info@iec.ch
www.iec.ch

About the IEC
The International Electrotechnical Commission (IEC) is the leading global organization that prepares and publishes International Standards for all electrical, electronic and related technologies.

About IEC publications
The technical content of IEC publications is kept under constant review by the IEC. Please make sure that you have the latest edition, a corrigendum or an amendment might have been published.

IEC publications search - webstore.iec.ch/advsearchform
The advanced search enables to find IEC publications by a variety of criteria (reference number, text, technical committee,…). It also gives information on projects, replaced and withdrawn publications.

IEC Just Published - webstore.iec.ch/justpublished
Stay up to date on all new IEC publications. Just Published details all new publications released. Available online and once a month by email.

IEC Customer Service Centre - webstore.iec.ch/csc
If you wish to give us your feedback on this publication or need further assistance, please contact the Customer Service Centre: sales@iec.ch.

Electropedia - www.electropedia.org
The world's leading online dictionary on electrotechnology, containing more than 22 000 terminological entries in English and French, with equivalent terms in 16 additional languages. Also known as the International Electrotechnical Vocabulary (IEV) online.

IEC Glossary - std.iec.ch/glossary
67 000 electrotechnical terminology entries in English and French extracted from the Terms and Definitions clause of IEC publications issued since 2002. Some entries have been collected from earlier publications of IEC TC 37, 77, 86 and CISPR.

A propos de l'IEC
La Commission Electrotechnique Internationale (IEC) est la première organisation mondiale qui élabore et publie des Normes internationales pour tout ce qui a trait à l'électricité, à l'électronique et aux technologies apparentées.

A propos des publications IEC
Le contenu technique des publications IEC est constamment revu. Veuillez vous assurer que vous possédez l'édition la plus récente, un corrigendum ou amendement peut avoir été publié.

Recherche de publications IEC - webstore.iec.ch/advsearchform
La recherche avancée permet de trouver des publications IEC en utilisant différents critères (numéro de référence, texte, comité d'études,…). Elle donne aussi des informations sur les projets et les publications remplacées ou retirées.

IEC Just Published - webstore.iec.ch/justpublished
Restez informé sur les nouvelles publications IEC. Just Published détaille les nouvelles publications parues. Disponible en ligne et une fois par mois par email.

Service Clients - webstore.iec.ch/csc
Si vous désirez nous donner des commentaires sur cette publication ou si vous avez des questions contactez-nous: sales@iec.ch.

Electropedia - www.electropedia.org
Le premier dictionnaire d'électrotechnologie en ligne au monde, avec plus de 22 000 articles terminologiques en anglais et en français, ainsi que les termes équivalents dans 16 langues additionnelles. Egalement appelé Vocabulaire Electrotechnique International (IEV) en ligne.

Glossaire IEC - std.iec.ch/glossary
67 000 entrées terminologiques électrotechniques, en anglais et en français, extraites des articles Termes et Définitions des publications IEC parues depuis 2002. Plus certaines entrées antérieures extraites des publications des CE 37, 77, 86 et CISPR de l'IEC.

Documents
Document Sharing Hub

Full document details: IEC 61191-3-2017

IEC 61191-3

Edition 2.0 2017-05

INTERNATIONAL STANDARD

NORME INTERNATIONALE

Printed board assemblies – Part 3: Sectional specification – Requirements for through-hole mount soldered assemblies

Ensembles de cartes imprimées – Partie 3: Spécification intermédiaire – Exigences relatives à l'assemblage par brasage de trous traversants

INTERNATIONAL
ELECTROTECHNICAL
COMMISSION

COMMISSION
ELECTROTECHNIQUE
INTERNATIONALE

ICS 31.240

ISBN 978-2-8322-7389-0

Warning! Make sure that you obtained this publication from an authorized distributor.
Attention! Veuillez vous assurer que vous avez obtenu cette publication via un distributeur agréé.

® Registered trademark of the International Electrotechnical Commission
Marque déposée de la Commission Electrotechnique Internationale

Documents
Document Sharing Hub

Full document details: IEC 61191-3-2017

CONTENTS

FOREWORD 4
1 Scope 6
2 Normative references 6
3 Terms and definitions 6
4 General requirements 6
5 Through-hole mounting of components 7
5.1 General 7
5.2 Placement accuracy 7
5.3 Through-hole component requirements 7
5.3.1 Lead preforming 7
5.3.2 Tempered leads 7
5.3.3 Lead forming requirements 7
5.3.4 Stress relief requirements 8
5.3.5 Lead termination requirements 8
6 Acceptance requirements 10
6.1 General 10
6.2 Control and corrective actions 10
6.2.1 General 10
6.2.2 Interfacial connections (vias) 10
6.3 Through-hole component lead soldering 11
6.3.1 General 11
6.3.2 Clinched leads 12
6.3.3 Exposed basis metal 13
7 Rework of unsatisfactory solder connections 13
Annex A (normative) Placement requirements for through-hole mount devices 14
A.1 General 14
A.2 Horizontal mounting, free-standing 14
A.3 Axial lead components 14
A.4 Radial lead components 14
A.5 Perpendicular mounting, free-standing 14
A.5.1 General 14
A.5.2 Mounting of components 15
A.5.3 Radial lead components 15
A.6 Side- and end-mounting 15
A.7 Supported component mounting 16
A.7.1 General 16
A.7.2 Stand-off positioning 17
A.7.3 Non-resilient footed stand-offs 17
A.8 Stress relief lead configuration 17
A.9 Flat pack lead configuration 18
Bibliography 19

Figure 1 – Lead bends 8
Figure 2 – Hole obstruction 10
Figure 3 – Through-hole component lead soldering 11

AVA Documents
Document Sharing Hub

Full document details: IEC 61191-3-2017

Figure 4 – Lead-to-land fillet requirements for clinched leads and wires in non-plated through-holes 11
Figure 5 – Lead-to-land fillet requirements for clinched leads and wires in plated through-holes 12
Figure A.1 – Mounting of free-standing components 14
Figure A.2 – Typical configuration of components with dual non-axial leads 15
Figure A.3 – Mounting of components with dual non-axial leads 15
Figure A.4 – Side mounting 16
Figure A.5 – End mounting 16
Figure A.6 – Mounting with footed stand-offs 17
Figure A.7 – Non-resilient footed stand-offs 17
Figure A.8 – Acceptable lead configurations 18
Figure A.9 – Configuration of ribbon leads for through-hole mounting 18

Table 1 – Plated through-holes with component leads, minimum acceptable conditions[1)] 12
Table 2 – Through-hole solder joint defects 13

Documents
Document Sharing Hub

Full document details: IEC 61191-3-2017

INTERNATIONAL ELECTROTECHNICAL COMMISSION

PRINTED BOARD ASSEMBLIES –

Part 3: Sectional specification – Requirements for through-hole mount soldered assemblies

FOREWORD

1) The International Electrotechnical Commission (IEC) is a worldwide organization for standardization comprising all national electrotechnical committees (IEC National Committees). The object of IEC is to promote international co-operation on all questions concerning standardization in the electrical and electronic fields. To this end and in addition to other activities, IEC publishes International Standards, Technical Specifications, Technical Reports, Publicly Available Specifications (PAS) and Guides (hereafter referred to as "IEC Publication(s)"). Their preparation is entrusted to technical committees; any IEC National Committee interested in the subject dealt with may participate in this preparatory work. International, governmental and non-governmental organizations liaising with the IEC also participate in this preparation. IEC collaborates closely with the International Organization for Standardization (ISO) in accordance with conditions determined by agreement between the two organizations.
2) The formal decisions or agreements of IEC on technical matters express, as nearly as possible, an international consensus of opinion on the relevant subjects since each technical committee has representation from all interested IEC National Committees.
3) IEC Publications have the form of recommendations for international use and are accepted by IEC National Committees in that sense. While all reasonable efforts are made to ensure that the technical content of IEC Publications is accurate, IEC cannot be held responsible for the way in which they are used or for any misinterpretation by any end user.
4) In order to promote international uniformity, IEC National Committees undertake to apply IEC Publications transparently to the maximum extent possible in their national and regional publications. Any divergence between any IEC Publication and the corresponding national or regional publication shall be clearly indicated in the latter.
5) IEC itself does not provide any attestation of conformity. Independent certification bodies provide conformity assessment services and, in some areas, access to IEC marks of conformity. IEC is not responsible for any services carried out by independent certification bodies.
6) All users should ensure that they have the latest edition of this publication.
7) No liability shall attach to IEC or its directors, employees, servants or agents including individual experts and members of its technical committees and IEC National Committees for any personal injury, property damage or other damage of any nature whatsoever, whether direct or indirect, or for costs (including legal fees) and expenses arising out of the publication, use of, or reliance upon, this IEC Publication or any other IEC Publications.
8) Attention is drawn to the Normative references cited in this publication. Use of the referenced publications is indispensable for the correct application of this publication.
9) Attention is drawn to the possibility that some of the elements of this IEC Publication may be the subject of patent rights. IEC shall not be held responsible for identifying any or all such patent rights.

International Standard IEC 61191-3 has been prepared by WG 2: Requirements for electronics assemblies, of IEC technical committee 91: Electronics assembly technology.

This bilingual version (2019-09) corresponds to the monolingual English version, published in 2017-05.

This second edition cancels and replaces the first edition published in 1998. This edition constitutes a technical revision.

This edition includes the following significant technical changes with respect to the previous edition:

a) The requirements have been updated to be compliant with the acceptance criteria in IPC-A-610F.

Documents
Document Sharing Hub

Full document details: IEC 61191-3-2017

The text of this standard is based on the following documents:

CDV	Report on voting
91/1375/CDV	91/1435/RVC

Full information on the voting for the approval of this International Standard can be found in the report on voting indicated in the above table.

The French version of this standard has not been voted upon.

This document has been drafted in accordance with the ISO/IEC Directives, Part 2.

A list of all parts in the IEC 61191 series, published under the general title *Printed board assemblies*, can be found on the IEC website.

The committee has decided that the contents of this document will remain unchanged until the stability date indicated on the IEC website under "http://webstore.iec.ch" in the data related to the specific document. At this date, the document will be

- reconfirmed,
- withdrawn,
- replaced by a revised edition, or
- amended.

Documents
Document Sharing Hub

Full document details: IEC 61191-3-2017

PRINTED BOARD ASSEMBLIES –

Part 3: Sectional specification – Requirements for through-hole mount soldered assemblies

1 Scope

This part of IEC 61191 prescribes requirements for lead and hole solder assemblies. The requirements pertain to those assemblies that totally use through-hole mounting technology (THT), or the THT portions of those assemblies that include other related technologies (i.e. surface mount, chip mounting, terminal mounting).

2 Normative references

The following documents are referred to in the text in such a way that some or all of their content constitutes requirements of this document. For dated references, only the edition cited applies. For undated references, the latest edition of the referenced document (including any amendments) applies.

IEC 60194, *Printed board design, manufacture and assembly – Terms and definitions*

IEC 61191-1:2013, *Printed board assemblies – Part 1: Generic specification – Requirements for soldered electrical and electronic assemblies using surface mount and related assembly technologies*

IPC-A-610, *Acceptability of Electronic Assemblies*

3 Terms and definitions

For the purposes of this document, the terms and definitions given in IEC 60194 apply.

ISO and IEC maintain terminological databases for use in standardization at the following addresses:

- IEC Electropedia: available at http://www.electropedia.org/
- ISO Online browsing platform: available at http://www.iso.org/obp

3.1
THT
through-hole technology
technology that permits an electrical connection of components to a conductive pattern by the use of plated or non-plated holes with annular rings in the mounting substrate

4 General requirements

Requirements of IEC 61191-1 are a mandatory part of this specification. Workmanship shall meet the requirements of IPC-A-610 in accordance with the classification requirements of this document.

Documents
Document Sharing Hub

Full document details: IEC 61191-3-2017

5 Through-hole mounting of components

5.1 General

This clause covers the assembly of components with leads inserted into through-holes and soldered by machine and/or manual processes.

5.2 Placement accuracy

Placement accuracy for components inserted either manually or by machine methods shall be sufficient to insure that components are properly positioned after soldering. If suitable process controls are not in place to ensure compliance with this requirement and the intent of Annex A, the detailed requirements of Annex A shall be applicable.

5.3 Through-hole component requirements

5.3.1 Lead preforming

Part and component leads shall be pre-formed to the final configuration, excluding the final clinch or retention bend, before assembly or installation.

5.3.2 Tempered leads

When it is necessary to cut tempered leads, the governing work instructions shall specify cutting tools that do not impart detrimental shocks to internal connections of the components.

5.3.3 Lead forming requirements

Leads shall be formed in such a manner that the lead-to-body seal is not damaged or degraded. Leads shall extend at least one lead diameter or thickness but not less than 0,8 mm from the body or weld before the start of the bend radius (see Figure 1).

Exposed core metal is acceptable if reduction in the cross-sectional area does not exceed 10 % of the diameter of the lead. Occurrence of exposed core metal in the formed area of the lead shall be treated as a process indicator.

Measurement shall be made from the end of the part. The end of the part is defined to include any coating meniscus, solder seal, solder or weld bead, or any other extension.

The span for components mounted with a conventional lead form is 7,6 mm minimum, and 33 mm maximum.

Documents
Document Sharing Hub

Full document details: IEC 61191-3-2017

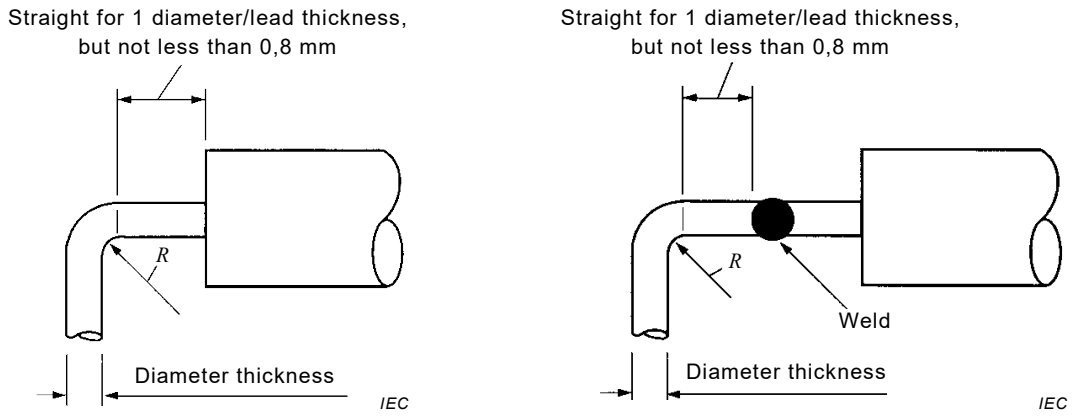

a) Standard bend **b) Welded bend**

Maximum lead diameter mm	**Minimum bend radius** *R*
Up to 0,8 0,8 to 1,2 Larger than 1,2	1 diameter/thickness 1,5 diameters/thicknesses 2 diameters/thicknesses

Figure 1 – Lead bends

5.3.4 Stress relief requirements

Component leads shall be formed in such a manner that the lead compliancy is not restricted in providing the natural stress relief of the lead material. Special lead formations are permitted to enhance stress relief properties.

5.3.5 Lead termination requirements

5.3.5.1 General

To ensure part retention during soldering operations, lead terminations in printed board plated through-holes shall be one of the following configurations: full clinch, partially clinched, or straight-through lead termination, as specified on the assembly drawing. In the event that nothing is specified, the manufacturer shall conform to the requirements in 5.3.5.2 to 5.3.5.10 as appropriate.

5.3.5.2 Clinched lead termination

Leads in unsupported holes and class C shall be clinched a minimum of 45°. The lead end should not extend beyond the edge of the land; however, if overhang does occur, the lead extension shall not violate minimum electrical spacing requirements. Leads formed of alloy 42 or comparable iron bearing alloys shall not be terminated with a full clinch.

NOTE Alloy 42 has the composition of Fe-Ni 41-Mn 0,8-Co 0,5.

5.3.5.3 Clinched lead orientation

When manually clinched, the clinched portion of the wire or lead should be directed along a printed conductor connected to the land. The leads on opposite ends or sides of a component should be directed in opposite directions. When automatically clinched, the orientation of the clinch relative to any conductor is optional. Manually formed clinches for non-axial leaded components should be directed radially from the centre of the component when the termination area array on the printed board is patterned for such radial orientation.

Documents
Document Sharing Hub
Full document details: IEC 61191-3-2017

5.3.5.4 Partially clinched leads

Partially clinched leads shall be bent sufficiently to provide the necessary mechanical restraint during the soldering process. Alternate bend directions may be used. Diagonally opposite corner leads on dual-in-line packages (DIPs) may be partially clinched to retain parts during soldering operations. DIP leads should be bent outwards away from the longitudinal axis of the body.

5.3.5.5 Straight-through lead terminations

Component leads terminated straight through shall not extend in excess of 1,5 mm for level C, or 2,5 mm for level B, and no danger of shorts for level C, beyond the conductor surface, and as a minimum shall be visible in the completed solder connection. The lead protrusion for unsupported holes shall be discernible in the solder joint for levels A and B, and sufficient to clinch for level C. The maximum protrusion in all levels shall not create the risk of shorts. Assembly designs that necessitate different lead extensions are considered to have unique mounting requirements to be noted on the approved assembly drawing.

5.3.5.6 Meniscus spacing and trimming

Components shall be mounted to provide a visible clearance between the coating meniscus on each lead and the solder connection. Trimming of the component coating meniscus is prohibited.

5.3.5.7 Lead trimming

Leads may be trimmed after soldering, provided the cutters do not damage the component or solder connection due to physical shock. When lead cutting is performed after soldering, the solder terminations shall either be reflowed or visually inspected at 10 times magnification to ensure that the original solder connection has not been damaged (e.g. fractured) or deformed. If the solder connection is reflowed, this shall be considered a part of the soldering process and shall not be considered rework. This requirement is not intended to apply to components that are designed so that a portion of the lead is intended to be removed after soldering (e.g. breakaway tie bars).

NOTE This inspection at 10 times magnification is to evaluate the soldered termination for evidence of physical damage or deformation, indicated by fractures that are smaller than the land sizes inspected in accordance with IEC 61191-1, provided that the breakpoint does not expose lead material that is corrodible (e.g. Kovar™ [1] [Fe 54/Ni 29/Co 17])

5.3.5.8 Hole obstruction

Components shall be mounted so that they do not obstruct solder flow onto the upper side lands of plated through-holes required to be soldered (see Figure 2).

[1] Kovar is an example of a suitable product available commercially. This information is given for the convenience of users of this document and does not constitute an endorsement by IEC of this product.

AVA Documents
Document Sharing Hub

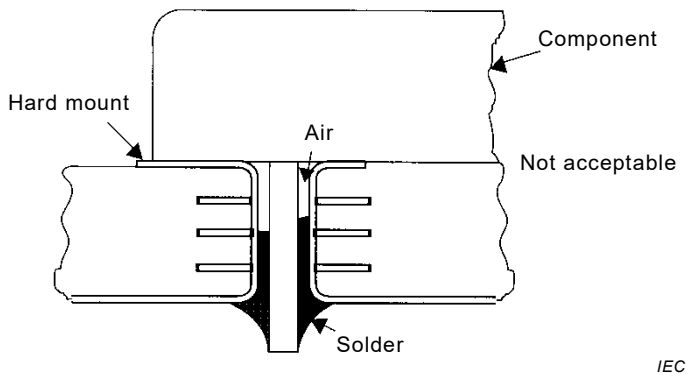

Figure 2 – Hole obstruction

5.3.5.9 Metal-cased component insulation

Metal-cased components shall be insulated from adjacent electrically conductive elements. Insulation material shall be compatible with the circuit and printed board material.

5.3.5.10 Jumper wires

Jumper wires shall conform to the applicable design specification(s) and shall be documented on the assembly drawing.

6 Acceptance requirements

6.1 General

Materials, processes and procedures described and specified in IEC 61191-1 provide for soldered interconnections that are better than the minimum acceptance requirements in this clause. Processes and their controls should be capable of producing products meeting or exceeding the acceptance criteria for a level C product.

6.2 Control and corrective actions

6.2.1 General

The detailed requirements for acceptance, corrective action limits, control limit determination and general assembly criteria described in IEC 61191-1 are a mandatory part of this standard. In addition, the criteria defined in Subclauses 6.2.2 to 6.3.3 shall meet the requirements for all through-hole assembly and connection acceptability.

6.2.2 Interfacial connections (vias)

Unsupported holes with leads, or plated through-holes not subjected to mass soldering and used for interfacial connections, need not be filled with solder. Exposed copper on via pads is permitted. Plated through-holes that are not exposed to solder, because of permanent or temporary maskants, and which are used for interfacial connections, need not be filled with solder.

Plated through-holes without leads, including vias, after exposure to reflow, wave, dip, or drag solder processing shall meet the acceptability requirements of IEC 61191-1.

Documents
Document Sharing Hub
Full document details: IEC 61191-3-2017

6.3 Through-hole component lead soldering

6.3.1 General

The solder joint shall provide evidence of good wetting, and the plated through-hole solder fill shall meet the requirements of Table 1 and Figures 3 and 5, with solder wetted to the hole's wall. Single-sided boards shall meet conditions C and E of Table 1 and Figure 4.

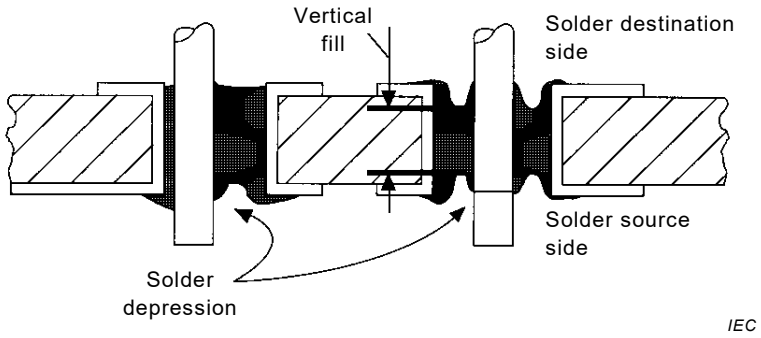

Minimum acceptable for all levels as in Table 1.

Outline of the lead or wire shall be visible in the solder fillet.

Figure 3 – Through-hole component lead soldering

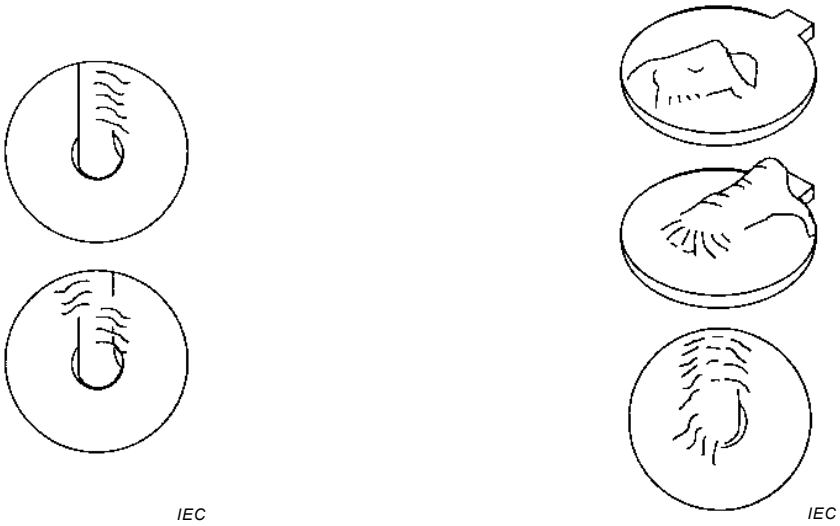

Levels A and B

Level C

Figure 4 – Lead-to-land fillet requirements for clinched leads and wires in non-plated through-holes

Documents
Document Sharing Hub
Full document details: IEC 61191-3-2017

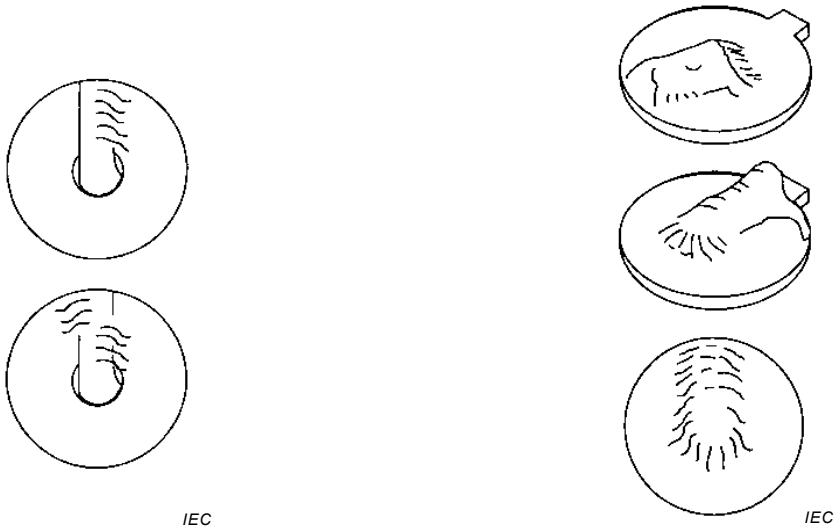

Levels A and B

Level C

Figure 5 – Lead-to-land fillet requirements for clinched leads and wires in plated through-holes

Table 1 – Plated through-holes with component leads, minimum acceptable conditions[1)]

Criteria	Level A	Level B	Level C
A. Circumferential wetting-solder, destination side – lead and barrel	Not specified	180°	270°
B. Vertical fill of solder [2)]	Not specified	75 %[3)]	75 %
C. Circumferential fillet and wetting – solder source side	270°	270°	330°
D. Percentage of original land area covered with wetted solder – solder destination side	0 %	0 %	0 %
E. Percentage of original land area covered with wetted solder – solder source side	75 %	75 %	75 %

1) Wetted solder refers to solder applied by the solder process.

2) A total maximum of 25 % depression, including both solder source and destination sides, is permitted.

3) For level B solder fill of 50% or 1.2mm, whichever is less, is acceptable when the plated hole is connected to a heatsink layer, the lead is discernible on the solder source side, and the solder joint shows 360° circumferential wetting of barrel and lead on the solder source side.

The connection for level A and B may have one or two fillets corresponding in length to 270° of the overlap of the lead on the termination land.

A connection in level C shall show circumferential fillet of 330° complete. Heel of leads shall be wetted with solder. Solder shall fill the hole in accordance with table 1.

6.3.2 Clinched leads

If a lead or wire is clinched, the lead or wire may make contact with the conductor pattern before soldering. The outline of the lead or wire shall be visible in the solder fillet. See Figures 4 and 5.

Documents
Document Sharing Hub
Full document details: IEC 61191-3-2017