IEC 61196-12

Edition 1.0 2024-05

INTERNATIONAL STANDARD

colour inside

Coaxial communication cables –
Part 12: Specification for spacer clamps for radiating cables

IEC 61196-12:2024-05(en)

Documents
Document Sharing Hub

Full document details: IEC 61196-12-2024

THIS PUBLICATION IS COPYRIGHT PROTECTED
Copyright © 2024 IEC, Geneva, Switzerland

All rights reserved. Unless otherwise specified, no part of this publication may be reproduced or utilized in any form or by any means, electronic or mechanical, including photocopying and microfilm, without permission in writing from either IEC or IEC's member National Committee in the country of the requester. If you have any questions about IEC copyright or have an enquiry about obtaining additional rights to this publication, please contact the address below or your local IEC member National Committee for further information.

IEC Secretariat
3, rue de Varembé
CH-1211 Geneva 20
Switzerland

Tel.: +41 22 919 02 11
info@iec.ch
www.iec.ch

About the IEC
The International Electrotechnical Commission (IEC) is the leading global organization that prepares and publishes International Standards for all electrical, electronic and related technologies.

About IEC publications
The technical content of IEC publications is kept under constant review by the IEC. Please make sure that you have the latest edition, a corrigendum or an amendment might have been published.

IEC publications search - webstore.iec.ch/advsearchform
The advanced search enables to find IEC publications by a variety of criteria (reference number, text, technical committee, …). It also gives information on projects, replaced and withdrawn publications.

IEC Just Published - webstore.iec.ch/justpublished
Stay up to date on all new IEC publications. Just Published details all new publications released. Available online and once a month by email.

IEC Customer Service Centre - webstore.iec.ch/csc
If you wish to give us your feedback on this publication or need further assistance, please contact the Customer Service Centre: sales@iec.ch.

IEC Products & Services Portal - products.iec.ch
Discover our powerful search engine and read freely all the publications previews, graphical symbols and the glossary. With a subscription you will always have access to up to date content tailored to your needs.

Electropedia - www.electropedia.org
The world's leading online dictionary on electrotechnology, containing more than 22 500 terminological entries in English and French, with equivalent terms in 25 additional languages. Also known as the International Electrotechnical Vocabulary (IEV) online.

Documents
Document Sharing Hub

Full document details: IEC 61196-12-2024

IEC 61196-12

Edition 1.0 2024-05

INTERNATIONAL STANDARD

colour inside

Coaxial communication cables –
Part 12: Specification for spacer clamps for radiating cables

INTERNATIONAL
ELECTROTECHNICAL
COMMISSION

ICS 33.120.10

ISBN 978-2-8322-8975-4

Warning! Make sure that you obtained this publication from an authorized distributor.

® Registered trademark of the International Electrotechnical Commission

Documents
Document Sharing Hub

Full document details: IEC 61196-12-2024

CONTENTS

FOREWORD 4
1 Scope 6
2 Normative references 6
3 Terms and definitions 6
4 Design and construction 7
4.1 Ratings and characteristics 7
4.2 Material and design 7
5 IEC type designation 8
5.1 Type 8
5.2 Variant 8
5.3 Marking 9
5.4 Packaging 9
6 Requirements and test procedures 9
6.1 General conditions for the tests 9
6.2 Visual inspection 10
6.2.1 Requirements 10
6.2.2 Test procedure 10
6.3 Structural dimensions 10
6.3.1 Requirements 10
6.3.2 Test procedure 10
6.4 Mechanical performance 10
6.4.1 Clamping force 10
6.4.2 Normal tensile force 14
6.4.3 Shear force 16
6.5 Environmental characteristics 17
6.5.1 Cold temperature installation 17
6.5.2 Climatic sequence 18
6.5.3 Salt mist 19
6.5.4 High cycle fatigue (optional) 20
6.5.5 Fire-resistance (fireproof clamp) 22
6.5.6 Solar radiation (outdoor spacer clamp with non-metallic material) 24
7 Type test 24
Annex A (informative) Recommended mechanical characteristics for spacer clamps 26
Annex B (informative) Cable dummy 27
Annex C (informative) Suitability test of spacer clamps of non-self-supporting cable 28
C.1 Objective 28
C.2 Test procedure 28
C.3 Requirements 28
C.4 Information to be given in the product detail specification 28
Bibliography 29

Figure 1 – The dimensions of the integrated messenger wire 8
Figure 2 – Schematic diagram of test for clamping force 13
Figure 3 – Schematic diagram of normal tensile force 15
Figure 4 – Schematic diagram of shear force 16

AVA Documents
Document Sharing Hub
Full document details: IEC 61196-12-2024

Figure 5 – Schematic diagram of cold temperature installation 17
Figure 6 – Installation for climatic sequence test 18
Figure 7 – Schematic diagram of test for high cycle fatigue 21
Figure 8 – Swelling load 22
Figure 9 – Schematic diagram of fire resistance test 23
Figure B.1 – Structure for a cable dummy 27

Table 1 – Type test 25
Table A.1 – Recommended mechanical characteristics for spacer clamps 26

Documents
Document Sharing Hub

Full document details: IEC 61196-12-2024

INTERNATIONAL ELECTROTECHNICAL COMMISSION

COAXIAL COMMUNICATION CABLES –

Part 12: Specification for spacer clamps for radiating cables

FOREWORD

1) The International Electrotechnical Commission (IEC) is a worldwide organization for standardization comprising all national electrotechnical committees (IEC National Committees). The object of IEC is to promote international co-operation on all questions concerning standardization in the electrical and electronic fields. To this end and in addition to other activities, IEC publishes International Standards, Technical Specifications, Technical Reports, Publicly Available Specifications (PAS) and Guides (hereafter referred to as "IEC Publication(s)"). Their preparation is entrusted to technical committees; any IEC National Committee interested in the subject dealt with may participate in this preparatory work. International, governmental and non-governmental organizations liaising with the IEC also participate in this preparation. IEC collaborates closely with the International Organization for Standardization (ISO) in accordance with conditions determined by agreement between the two organizations.
2) The formal decisions or agreements of IEC on technical matters express, as nearly as possible, an international consensus of opinion on the relevant subjects since each technical committee has representation from all interested IEC National Committees.
3) IEC Publications have the form of recommendations for international use and are accepted by IEC National Committees in that sense. While all reasonable efforts are made to ensure that the technical content of IEC Publications is accurate, IEC cannot be held responsible for the way in which they are used or for any misinterpretation by any end user.
4) In order to promote international uniformity, IEC National Committees undertake to apply IEC Publications transparently to the maximum extent possible in their national and regional publications. Any divergence between any IEC Publication and the corresponding national or regional publication shall be clearly indicated in the latter.
5) IEC itself does not provide any attestation of conformity. Independent certification bodies provide conformity assessment services and, in some areas, access to IEC marks of conformity. IEC is not responsible for any services carried out by independent certification bodies.
6) All users should ensure that they have the latest edition of this publication.
7) No liability shall attach to IEC or its directors, employees, servants or agents including individual experts and members of its technical committees and IEC National Committees for any personal injury, property damage or other damage of any nature whatsoever, whether direct or indirect, or for costs (including legal fees) and expenses arising out of the publication, use of, or reliance upon, this IEC Publication or any other IEC Publications.
8) Attention is drawn to the Normative references cited in this publication. Use of the referenced publications is indispensable for the correct application of this publication.
9) IEC draws attention to the possibility that the implementation of this document may involve the use of (a) patent(s). IEC takes no position concerning the evidence, validity or applicability of any claimed patent rights in respect thereof. As of the date of publication of this document, IEC had not received notice of (a) patent(s), which may be required to implement this document. However, implementers are cautioned that this may not represent the latest information, which may be obtained from the patent database available at https://patents.iec.ch. IEC shall not be held responsible for identifying any or all such patent rights.

IEC 61196-12 has been prepared by subcommittee 23A: Cable management systems, of IEC technical committee 23: Electrical accessories. It is an International Standard.

The text of this International Standard is based on the following documents:

Draft	Report on voting
23A/1073/FDIS	23A/1076/RVD

Full information on the voting for its approval can be found in the report on voting indicated in the above table.

The language used for the development of this International Standard is English.

Documents
Document Sharing Hub

Full document details: IEC 61196-12-2024

This document was drafted in accordance with ISO/IEC Directives, Part 2, and developed in accordance with ISO/IEC Directives, Part 1 and ISO/IEC Directives, IEC Supplement, available at www.iec.ch/members_experts/refdocs. The main document types developed by IEC are described in greater detail at www.iec.ch/publications.

A list of all parts in the IEC 61196 series, published under the general title *Coaxial communication cables*, can be found on the IEC website.

The committee has decided that the contents of this document will remain unchanged until the stability date indicated on the IEC website under webstore.iec.ch in the data related to the specific document. At this date, the document will be

- reconfirmed,
- withdrawn, or
- revised.

IMPORTANT – The "colour inside" logo on the cover page of this document indicates that it contains colours which are considered to be useful for the correct understanding of its contents. Users should therefore print this document using a colour printer.

Documents
Document Sharing Hub

Full document details: IEC 61196-12-2024

COAXIAL COMMUNICATION CABLES –

Part 12: Specification for spacer clamps for radiating cables

1 Scope

This part of IEC 61196 defines general requirements for spacer clamps for radiating cables, including terms and definitions, design and construction, IEC type designation, requirements and test procedures and type tests.

The contents of this document are suitable for spacer clamps for installation of radiating cables. These cables and their spacer clamps are widely used in tunnels, subways, underpasses, and shafts. Their intended application is in weather-protected environments and, optionally, outdoors.

2 Normative references

The following documents are referred to in the text in such a way that some or all of their content constitutes requirements of this document. For dated references, only the edition cited applies. For undated references, the latest edition of the referenced document (including any amendments) applies.

IEC 60068-2-1, *Environmental testing – Part 2-1: Tests – Test A: Cold*

IEC 60068-2-5, *Environmental testing – Part 2-5: Tests – Test S: Simulated solar radiation at ground level and guidance for solar radiation testing and weathering*

IEC 60068-2-30, *Environmental testing – Part 2-30: Tests – Test Db: Damp heat, cyclic (12 h + 12 h cycle)*

IEC 61196-4, *Coaxial communication cables – Part 4: Sectional specification for radiating cables*

ISO 834-1:1999, *Fire-resistance tests – Elements of building construction – Part 1: General requirements*

ISO 9227, *Corrosion tests in artificial atmospheres – Salt spray tests*

3 Terms and definitions

For the purposes of this document, the terms and definitions given in IEC 61196-4 and the following apply.

ISO and IEC maintain terminology databases for use in standardization at the following addresses:

- IEC Electropedia: available at https://www.electropedia.org/
- ISO Online browsing platform: available at https://www.iso.org/obp

Documents
Document Sharing Hub

Full document details: IEC 61196-12-2024

3.1
spacer clamp
mechanical device to install a radiating cable at a certain distance from the base or from a steel rope

3.2
suspended clamp
spacer clamp to install a radiating cable on suspended steel ropes

3.3
cantilever clamp
spacer clamp to install a radiating cable at a certain distance from the base

3.4
fireproof clamp
spacer clamp with a fireproof device that can prevent the radiating cable from falling if it catches fire

3.5
fireproof device
device that can prevent the radiating cable from falling when a fire happens

4 Design and construction

4.1 Ratings and characteristics

Spacer clamps shall be designed and built to satisfy the environmental requirements as follows:

a) Temperature range: −40 °C to +85 °C

b) Humidity: 5 % to 95 %

4.2 Material and design

Spacer clamps shall be designed and built to meet the following requirements:

a) Spacer clamps shall be made of metallic, non-metallic or composite materials.

NOTE Spacer clamps that are made of metal or comprise metallic components can cause the creation of external passive intermodulation.

b) The structure and dimensions of spacer clamps shall be matched to the cable to be fastened.

c) For radiating cables with a radial direction marking line, the spacer clamp shall be designed with a structure to locate the radiating direction, which shall be consistent with the marking line of the radiating cable.

d) Minimum vertical distance from the surface of the radiating cable installed to that of the base after installation shall be in accordance with the stated requirements of the corresponding cable.

e) Spacer clamps and their fireproof devices, if any, shall be designed so that they cannot influence radiating performance of the cable, and shall be compatible with the climate and mechanical environments during operation.

f) Fasteners and fixings for spacer clamps shall be specified in the product detail specification.

Spacer clamps may be assembled from various components of a modular system. Depending on the combination of components, different features may be made available, for example different spacing to the base and fire retardancy. In this case, the spacer clamp shall also be understood to be a specific combination of system elements.

Documents
Document Sharing Hub
Full document details: IEC 61196-12-2024

5 IEC type designation

5.1 Type

The type designation of spacer clamps for radiating cables shall be as follows:

a) SC: the code of the spacer clamp;

b) minimum outer diameter for clamping the cable, expressed by an integer, in mm;

c) maximum outer diameter for clamping the cable, expressed by an integer, in mm.

For example, SC38-41 represents spacer clamps for radiating cables with the outer diameter range from 38 mm to 41 mm for clamping the cables.

5.2 Variant

The variant designation of spacer clamps shall be as follows:

a) Fireproof type – expressed as follows:
   - F: for fireproof clamp;
   - omitted for non-fireproof clamp.

b) Installation type – expressed as follows:
   - C: cantilever type;
   - S: suspended type;
   - CM: cantilever type for self-supporting radiating cable with messenger;
   - SM: suspended type for self-supporting radiating cable with messenger.

c) The space distance of cable surface to the base or wire, in mm; for example, 80 means 80 mm.

d) Nominal dimensions of the integrated messenger wire for self-supporting radiating cables – expressed as follows:

   d*w*h: d, w and h are the nominal dimensions of the integrated messenger wire, expressed by an integer, in mm, as shown in Figure 1.

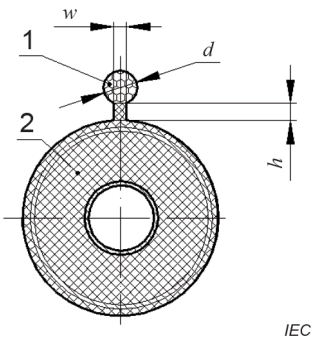

Key

1 integrated messenger wire of the radiating cable

2 self-supporting radiating cable

Figure 1 – The dimensions of the integrated messenger wire

For example, SC38-41FCM80 9*2*3 represents spacer clamps, the outer diameter range from 38 mm to 41 mm for clamping the cables, fireproof cantilever clamp, the space distance of cable surface to the base or wire is 80 mm, for self-supporting radiating cables with the nominal dimensions of the integrated messenger wire d = 9, w = 2 and h = 3.

Documents
Document Sharing Hub
Full document details: IEC 61196-12-2024

5.3 Marking

A marking on the product shall enable the user to unambiguously assign the product to the technical data provided by the manufacturer and the IEC standard applied.

The marking on the product itself does not have to include the full designation in accordance with this standard.

A marking on the product shall allow clear identification of the responsible supplier.

5.4 Packaging

Packaging boxes of spacer clamps shall be marked with manufacturer name (or code), trademark, type designation of the spacer clamps, quantity, production lot number, and IEC standard number.

6 Requirements and test procedures

6.1 General conditions for the tests

Spacer clamps shall be tested in the following general conditions:

a) Tests in accordance with this document are type tests.

b) Unless otherwise specified, the tests shall be carried out in standard atmospheric conditions as follows:

   – temperature: (23 ± 2)° C;

   – relative humidity: (45 to 55) %;

   – air pressure: (86 to 106) kPa.

c) Unless otherwise specified, tests shall be carried out with the spacer clamps assembled and installed as in normal use according to the manufacturer's or responsible vendor's instructions.

d) Tests on non-metallic spacer clamps or composite spacer clamps shall not be commenced earlier than 168 h after manufacture.

e) When toxic or hazardous processes are used, precautions shall be taken to safeguard the person performing the test.

f) If there are different sizes for each type series of spacer clamps, the size (e.g. clamping diameter) that is most critical for tests is to be used for the respective test. The result obtained then also applies to all other sizes of this type of series by similarity.

   If it cannot be technically determined which size is the critical one, all sizes shall be tested individually. All sizes shall be checked individually if the manufacturer or distributor wishes to specify different performances per size.

g) The test samples shall be taken as a random sample from series production. Unless otherwise defined, the sample size to be tested per test is at least 3.

h) The test requirement is considered fulfilled when all test samples have successfully passed the test.

i) If one of the samples does not satisfy a test, that test and any preceding ones that might have influenced the results of the test shall be repeated, and also the tests that follow shall be made in the required sequence on another full set of samples, all of which shall comply with the requirements.

j) If relative humidity or the ambient temperature has a significant effect on performance data obtained under the conditions of 6.1d), these shall be determined and declared. If necessary, the limits of use of the product shall be restricted compared to 4.1.

Documents
Document Sharing Hub
Full document details: IEC 61196-12-2024