IEC 61228

Edition 3.0 2020-11

INTERNATIONAL STANDARD

NORME INTERNATIONALE

colour inside

Fluorescent ultraviolet lamps used for tanning – Measurement and specification method

Lampes fluorescentes à ultraviolet utilisées pour le bronzage – Méthode de mesure et de spécification

IEC 61228:2020-11(en-fr)

Documents
Document Sharing Hub

Full document details: IEC 61228-2020

THIS PUBLICATION IS COPYRIGHT PROTECTED
Copyright © 2020 IEC, Geneva, Switzerland

All rights reserved. Unless otherwise specified, no part of this publication may be reproduced or utilized in any form or by any means, electronic or mechanical, including photocopying and microfilm, without permission in writing from either IEC or IEC's member National Committee in the country of the requester. If you have any questions about IEC copyright or have an enquiry about obtaining additional rights to this publication, please contact the address below or your local IEC member National Committee for further information.

Droits de reproduction réservés. Sauf indication contraire, aucune partie de cette publication ne peut être reproduite ni utilisée sous quelque forme que ce soit et par aucun procédé, électronique ou mécanique, y compris la photocopie et les microfilms, sans l'accord écrit de l'IEC ou du Comité national de l'IEC du pays du demandeur. Si vous avez des questions sur le copyright de l'IEC ou si vous désirez obtenir des droits supplémentaires sur cette publication, utilisez les coordonnées ci-après ou contactez le Comité national de l'IEC de votre pays de résidence.

IEC Central Office
3, rue de Varembé
CH-1211 Geneva 20
Switzerland

Tel.: +41 22 919 02 11
info@iec.ch
www.iec.ch

About the IEC
The International Electrotechnical Commission (IEC) is the leading global organization that prepares and publishes International Standards for all electrical, electronic and related technologies.

About IEC publications
The technical content of IEC publications is kept under constant review by the IEC. Please make sure that you have the latest edition, a corrigendum or an amendment might have been published.

IEC publications search - webstore.iec.ch/advsearchform
The advanced search enables to find IEC publications by a variety of criteria (reference number, text, technical committee,…). It also gives information on projects, replaced and withdrawn publications.

IEC Just Published - webstore.iec.ch/justpublished
Stay up to date on all new IEC publications. Just Published details all new publications released. Available online and once a month by email.

IEC Customer Service Centre - webstore.iec.ch/csc
If you wish to give us your feedback on this publication or need further assistance, please contact the Customer Service Centre: sales@iec.ch.

Electropedia - www.electropedia.org
The world's leading online dictionary on electrotechnology, containing more than 22 000 terminological entries in English and French, with equivalent terms in 16 additional languages. Also known as the International Electrotechnical Vocabulary (IEV) online.

IEC Glossary - std.iec.ch/glossary
67 000 electrotechnical terminology entries in English and French extracted from the Terms and Definitions clause of IEC publications issued since 2002. Some entries have been collected from earlier publications of IEC TC 37, 77, 86 and CISPR.

A propos de l'IEC
La Commission Electrotechnique Internationale (IEC) est la première organisation mondiale qui élabore et publie des Normes internationales pour tout ce qui a trait à l'électricité, à l'électronique et aux technologies apparentées.

A propos des publications IEC
Le contenu technique des publications IEC est constamment revu. Veuillez vous assurer que vous possédez l'édition la plus récente, un corrigendum ou amendement peut avoir été publié.

Recherche de publications IEC - webstore.iec.ch/advsearchform
La recherche avancée permet de trouver des publications IEC en utilisant différents critères (numéro de référence, texte, comité d'études,…). Elle donne aussi des informations sur les projets et les publications remplacées ou retirées.

IEC Just Published - webstore.iec.ch/justpublished
Restez informé sur les nouvelles publications IEC. Just Published détaille les nouvelles publications parues. Disponible en ligne et une fois par mois par email.

Service Clients - webstore.iec.ch/csc
Si vous désirez nous donner des commentaires sur cette publication ou si vous avez des questions contactez-nous: sales@iec.ch.

Electropedia - www.electropedia.org
Le premier dictionnaire d'électrotechnologie en ligne au monde, avec plus de 22 000 articles terminologiques en anglais et en français, ainsi que les termes équivalents dans 16 langues additionnelles. Egalement appelé Vocabulaire Electrotechnique International (IEV) en ligne.

Glossaire IEC - std.iec.ch/glossary
67 000 entrées terminologiques électrotechniques, en anglais et en français, extraites des articles Termes et Définitions des publications IEC parues depuis 2002. Plus certaines entrées antérieures extraites des publications des CE 37, 77, 86 et CISPR de l'IEC.

Documents
Document Sharing Hub

Full document details: IEC 61228-2020

IEC 61228

Edition 3.0 2020-11

INTERNATIONAL STANDARD

NORME INTERNATIONALE

colour inside

Fluorescent ultraviolet lamps used for tanning – Measurement and specification method

Lampes fluorescentes à ultraviolet utilisées pour le bronzage – Méthode de mesure et de spécification

INTERNATIONAL
ELECTROTECHNICAL
COMMISSION

COMMISSION
ELECTROTECHNIQUE
INTERNATIONALE

ICS 17.240; 29.140.01; 97.170

ISBN 978-2-8322-9009-5

Warning! Make sure that you obtained this publication from an authorized distributor.
Attention! Veuillez vous assurer que vous avez obtenu cette publication via un distributeur agréé.

AVA Documents
Document Sharing Hub

® Registered trademark of the International Electrotechnical Commission
Marque déposée de la Commission Electrotechnique Internationale

Full document details: IEC 61228-2020

CONTENTS

FOREWORD 3
1 Scope 5
2 Normative references 5
3 Terms and definitions 5
4 General test conditions 7
4.1 Ageing 7
4.2 Operating position 7
4.3 Ambient temperature 8
4.4 Test voltage 8
4.5 Ballast 9
5 Test requirements 9
5.1 General 9
5.2 Spectroradiometric measuring system 9
6 Measurement and evaluation procedure 9
6.1 Measurement 9
6.1.1 General 9
6.1.2 Double capped fluorescent UV Lamps 9
6.1.3 Single capped fluorescent UV Lamps 10
6.2 Calculation of the total effective UV irradiance 10
6.3 Ambient temperature adjustment 11
6.4 Reflector angle 11
6.5 Determination of the lamp maintenance code 11
7 Lamp specification 11
8 Lamp marking 12
Annex A (normative) Determination of the optimum UV irradiance of fluorescent UV lamps 13
Annex B (normative) Ultraviolet action spectra 14
Annex C (normative) Method of test for irradiance maintenance 16
C.1 General 16
C.2 Lamps for operation on AC mains frequencies 16
C.3 Lamps for operation on high frequency 16
Annex D (normative) Reflector gauge 17
Annex E (normative) Lamp datasheets for measurement 18
Bibliography 19

Figure 1 – Measurement position of single capped lamps 8
Figure 2 – Test circuit 8
Figure 3 – Location of measurement points on lamps with more than one layer 10
Figure B.1 – UV action spectra for erythema and NMSC 14
Figure D.1 – Reflector gauge 17

Table B.1 – Weighting factors S(λ) for erythema and NMSC action spectrum 15
Table E.1 – Lamp dimensions 18

Documents
Document Sharing Hub

Full document details: IEC 61228-2020

INTERNATIONAL ELECTROTECHNICAL COMMISSION

FLUORESCENT ULTRAVIOLET LAMPS USED FOR TANNING – MEASUREMENT AND SPECIFICATION METHOD

FOREWORD

1) The International Electrotechnical Commission (IEC) is a worldwide organization for standardization comprising all national electrotechnical committees (IEC National Committees). The object of IEC is to promote international co-operation on all questions concerning standardization in the electrical and electronic fields. To this end and in addition to other activities, IEC publishes International Standards, Technical Specifications, Technical Reports, Publicly Available Specifications (PAS) and Guides (hereafter referred to as "IEC Publication(s)"). Their preparation is entrusted to technical committees; any IEC National Committee interested in the subject dealt with may participate in this preparatory work. International, governmental and non-governmental organizations liaising with the IEC also participate in this preparation. IEC collaborates closely with the International Organization for Standardization (ISO) in accordance with conditions determined by agreement between the two organizations.
2) The formal decisions or agreements of IEC on technical matters express, as nearly as possible, an international consensus of opinion on the relevant subjects since each technical committee has representation from all interested IEC National Committees.
3) IEC Publications have the form of recommendations for international use and are accepted by IEC National Committees in that sense. While all reasonable efforts are made to ensure that the technical content of IEC Publications is accurate, IEC cannot be held responsible for the way in which they are used or for any misinterpretation by any end user.
4) In order to promote international uniformity, IEC National Committees undertake to apply IEC Publications transparently to the maximum extent possible in their national and regional publications. Any divergence between any IEC Publication and the corresponding national or regional publication shall be clearly indicated in the latter.
5) IEC itself does not provide any attestation of conformity. Independent certification bodies provide conformity assessment services and, in some areas, access to IEC marks of conformity. IEC is not responsible for any services carried out by independent certification bodies.
6) All users should ensure that they have the latest edition of this publication.
7) No liability shall attach to IEC or its directors, employees, servants or agents including individual experts and members of its technical committees and IEC National Committees for any personal injury, property damage or other damage of any nature whatsoever, whether direct or indirect, or for costs (including legal fees) and expenses arising out of the publication, use of, or reliance upon, this IEC Publication or any other IEC Publications.
8) Attention is drawn to the Normative references cited in this publication. Use of the referenced publications is indispensable for the correct application of this publication.
9) Attention is drawn to the possibility that some of the elements of this IEC Publication may be the subject of patent rights. IEC shall not be held responsible for identifying any or all such patent rights.

International Standard IEC 61228 has been prepared by subcommittee 34A: Electric light sources, of IEC technical committee 34: Lighting.

This third edition cancels and replaces the second edition published in 2008. This edition constitutes a technical revision.

This edition includes the following significant technical changes with respect to the previous edition:

a) maintenance code: description of the depreciation of the UV irradiance lamp during operation;
b) operating position: information added for single capped lamps;
c) spectroradiometric measuring system: new information about distance between sensor and lamp axis;
d) measurement and evaluation procedure: separated detailed information for double capped fluorescent UV lamps and single capped fluorescent UV lamps;
e) Annex C (normative), Method of test for irradiance maintenance: new information added;
f) Annex D (normative), Reflector gauge: new information added;

Documents
Document Sharing Hub

g) Annex E (normative), Lamp datasheets for measurement: complementary information added.

The text of this International Standard is based on the following documents:

FDIS	Report on voting
34A/2213/FDIS	34A/2220/RVD

Full information on the voting for the approval of this International Standard can be found in the report on voting indicated in the above table.

This document has been drafted in accordance with the ISO/IEC Directives, Part 2.

The committee has decided that the contents of this document will remain unchanged until the stability date indicated on the IEC website under "http://webstore.iec.ch" in the data related to the specific document. At this date, the document will be

- reconfirmed,
- withdrawn,
- replaced by a revised edition, or
- amended.

IMPORTANT – The 'colour inside' logo on the cover page of this publication indicates that it contains colours which are considered to be useful for the correct understanding of its contents. Users should therefore print this document using a colour printer.

Documents
Document Sharing Hub

Full document details: IEC 61228-2020

FLUORESCENT ULTRAVIOLET LAMPS USED FOR TANNING – MEASUREMENT AND SPECIFICATION METHOD

1 Scope

This document describes the method of measuring, evaluating and specifying the UV irradiation characteristics of fluorescent ultraviolet lamps that are used in appliances for tanning purposes. It includes specific requirements regarding the marking of such lamps.

These requirements relate only to type testing.

Lamps complying with the requirements of this document comply with the electrical and mechanical safety requirements of IEC 61195 and IEC 61199 with the exception of the requirements for maximum limits of UV radiation.

2 Normative references

The following documents are referred to in the text in such a way that some or all of their content constitutes requirements of this document. For dated references, only the edition cited applies. For undated references, the latest edition of the referenced document (including any amendments) applies.

IEC 60061-1, *Lamp caps and holders together with gauges for the control of interchangeability and safety – Part 1: Lamp caps*

IEC 60081, *Double-capped fluorescent lamps – Performance specifications*

IEC 60155, *Glow-starters for fluorescent lamps*

IEC 60335-2-27, *Household and similar electrical appliances – Safety – Part 2-27: Particular requirements for appliances for skin exposure to optical radiation*

IEC 60921, *Ballasts for tubular fluorescent lamps – Performance requirements*

IEC 60929, *AC and/or DC-supplied electronic control gear for tubular fluorescent lamps – Performance requirements*

IEC 61049, *Capacitors for use in tubular fluorescent and other discharge lamp circuits. Performance requirements*

ISO/CIE 28077:2016, *Photocarcinogenesis action spectrum (non-melanoma skin cancers)*

CIE 63:1984, *The spectroradiometric measurement of light sources*

3 Terms and definitions

For the purposes of this document, the following terms and definitions apply.

Documents
Document Sharing Hub

Full document details: IEC 61228-2020

ISO and IEC maintain terminological databases for use in standardization at the following addresses:

- IEC Electropedia: available at http://www.electropedia.org/
- ISO Online browsing platform: available at http://www.iso.org/obp

3.1
ultraviolet lamp
lamp which radiates especially strongly in the ultraviolet, the visible radiation produced, if any, not being of direct interest

[SOURCE: IEC 60050-845:1987, 845-07-52, modified – Note deleted.]

3.2
fluorescent lamp
discharge lamp of the low-pressure mercury type in which most of the light is emitted by one or several layers of phosphors excited by the ultraviolet radiation from the discharge

[SOURCE: IEC 60050-845:1987, 845-07-26, modified – Note deleted.]

3.3
spectroradiometer
instrument for measuring radiometric quantities in narrow wavelength intervals over a given spectral region

[SOURCE: IEC 60050-845:1987, 845-05-07]

3.4
bandwidth at a given wavelength
width at half-amplitude points of the transmittance function of a monochromator

Note 1 to entry: The bandwidth is expressed in nm.

3.5
spectral
adjective that, when applied to a quantity X pertaining to electromagnetic radiation, indicates:

– either that X is a function of the wavelength λ, symbol: $X(\lambda)$;
– or that the quantity referred to is the spectral concentration of X, symbol: $X_\lambda = \mathrm{d}X/\mathrm{d}\lambda$.

X_λ is also a function of λ and in order to stress this, it may be written $X_\lambda(\lambda)$ without any change of meaning

[SOURCE: IEC 60050-845:1987, 845-01-16, modified – Note deleted.]

3.6
irradiance
quotient of the radiant flux $\mathrm{d}\phi_e$ incident on an element of the surface containing the point, by the area $\mathrm{d}A$ of that element

Note 1 to entry: Irradiance is expressed in W/m^2.

[SOURCE: IEC 60050-845:1987, 845-01-37, modified – Domain and equivalent definition deleted.]

Documents
Document Sharing Hub
Full document details: IEC 61228-2020

3.7
action spectrum
efficiency of monochromatic radiations for producing a specified phenomenon in a specified system

[SOURCE: IEC 60050-845:1987, 845-06-14, modified – Definition revised.]

3.8
effective
adjective that, when applied to a quantity pertaining to electromagnetic radiation, indicates that the quantity referred to is weighed according to a specified action spectrum

3.9
nominal value
approximate quantity value used to designate or identify a lamp

[SOURCE: IEC 60050-151:2001, 151-16-09, modified – Definition revised and note deleted.]

3.10
rated value
quantity value for a characteristic of a lamp for specified operating conditions

Note 1 to entry: The value and/or conditions are specified in this document or assigned by the manufacturer or responsible vendor.

3.11
irradiance maintenance ratio
r
rated value of the ratio of the effective UV irradiance weighed according to the erythema action spectrum (250 nm to 400 nm) at a specified time to initial values

3.12
initial value
electrical and radiometric characteristics measured at the end of a 5 h ageing period

3.13
maintenance code
description of the depreciation of the UV irradiance lamp during operation between 5 h and 500 h

4 General test conditions

4.1 Ageing

Before the initial measurements, lamps shall be aged for a period of 5 h ± 0,25 h.

The ageing shall be performed in accordance with Annex C.

4.2 Operating position

During measurement, lamps shall be operated in a horizontal position. Ageing is preferably in a horizontal position; a vertical position may also be applied.

Single capped lamps shall be positioned such that the sensor sees both legs of the lamp (see Figure 1). If the lamp has more than two limbs, the manufacturer or responsible vendor shall specify the measurement position.

Documents
Document Sharing Hub
Full document details: IEC 61228-2020

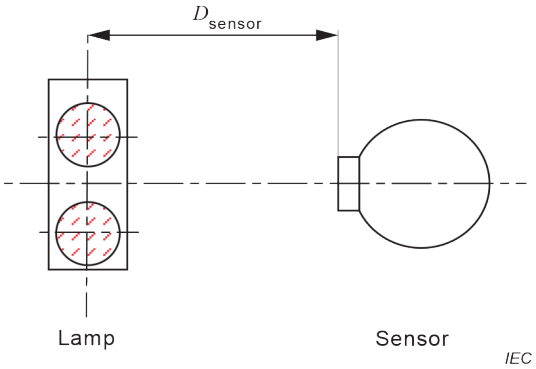

Figure 1 – Measurement position of single capped lamps

NOTE The lamp orientation in appliances used for skin exposure to ultraviolet radiation (sunbeds) can differ from the measuring position and hence the irradiance values can also differ.

4.3 Ambient temperature

The measurement shall be made in a draught-free atmosphere at an ambient temperature of 25 °C ± 1 °C.

If applicable, lamps may also be measured under conditions different from the above standard ambient temperature conditions to establish the optimum UV irradiance, as described in Annex A.

4.4 Test voltage

All measurements shall be made by applying the test circuit in Figure 2 (preheat start).

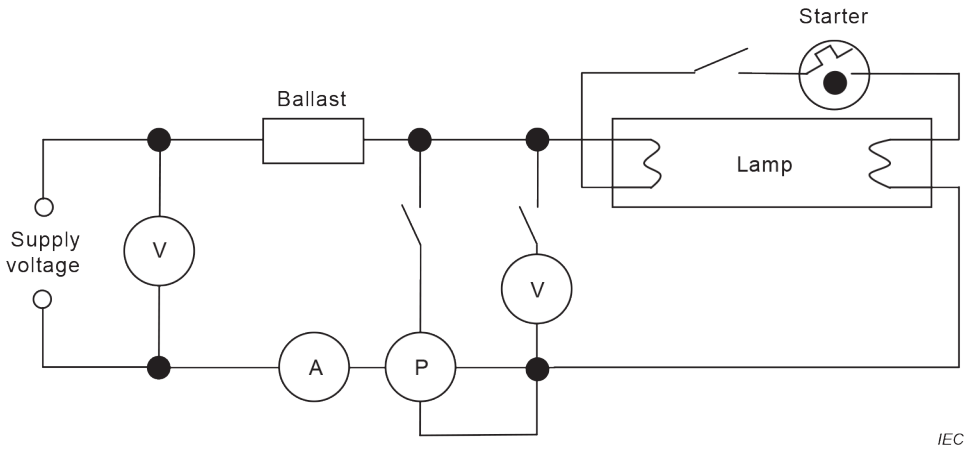

Figure 2 – Test circuit

The test voltage applied to the circuit shall be 110 % of the rated voltage of the reference ballast with the starter circuit continuously closed.

The AC mains/supply voltage for the irradiance measurements shall maintain a tolerance of ±0,2 %.

The AC mains/supply frequency shall be 50 Hz ± 0,1 % or 60 Hz ± 0,1 % for each measurement.

Documents
Document Sharing Hub
Full document details: IEC 61228-2020

4.5 Ballast

Lamps shall be operated with a ballast that generates electrical values for the operation of the respective lamp that match the values given by the corresponding lamp manufacturer or responsible vendor.

The ballast shall be operated at a frequency of 50 Hz or 60 Hz. The frequency shall be specified for each measurement.

5 Test requirements

5.1 General

Spectroradiometric measurements shall be made in accordance with the relevant recommendations of the CIE (International commission on illumination), as given in CIE 63.

NOTE 1 Additional information about UV measurements is given in Annex B of IEC 62471:2006.

NOTE 2 Additional requirements for electrical measurements are given in Annex B of IEC 60081:1997, Annex B of IEC 60081:1997/AMD2:2003, Annex B of IEC 60081:1997/AMD4:2010, Annex B of IEC 60081:1997/AMD5:2013 and Annex B of IEC 60901:1996, Annex B of IEC 60901:1996/AMD2:2000, Annex B of IEC 60901:1996/AMD5:2011 and Annex B of IEC 60901:1996/AMD6:2014.

5.2 Spectroradiometric measuring system

Lamps shall be measured in a spectroradiometer system to obtain the spectral irradiance.

The system input optics shall have a cosine response to accurately measure irradiance.

The spectroradiometer shall have a bandwidth at a given wavelength not exceeding 2,5 nm and its wavelength resolution shall not be higher than 1 nm.

The distance between sensor and lamp axis, D_{sensor}, shall be (25 ± 0,5) cm (see Figure 1).

NOTE A bandwidth at a given wavelength of 1 nm is preferred for greater measurement accuracy in cases where a rapid change of the spectral irradiance occurs within a small bandwidth area.

6 Measurement and evaluation procedure

6.1 Measurement

6.1.1 General

The spectral irradiance shall be measured at intervals of 1 nm from 250 nm to 400 nm. Under the test conditions, the lamp power, current and voltage shall be recorded. The lamp shall be in stable electric and radiometric conditions.

6.1.2 Double capped fluorescent UV Lamps

Double capped UV fluorescent lamps shall be operated during measurement such that the lamp axis is at the same height as the centre of the entrance aperture of the sensor. The sensor shall be placed in front of the middle of the lamp (see Figure 1).

Reflector lamps shall be operated such that the non-reflecting side is directed towards the entrance aperture of the spectroradiometer. Lamps having a portion with no phosphor layer shall be positioned, such that the uncoated portion is directed centrally towards the entrance aperture of the spectroradiometer.

Documents
Document Sharing Hub
Full document details: IEC 61228-2020

UV Lamps having more than one phosphor layer along the lamp axis (see Figure 3) shall be measured in front of the middle of that layer, which shows the highest erythema effective irradiance.

NOTE For determining the layer showing the highest erythema effective irradiance, a spectral broad band radiometer can be used.

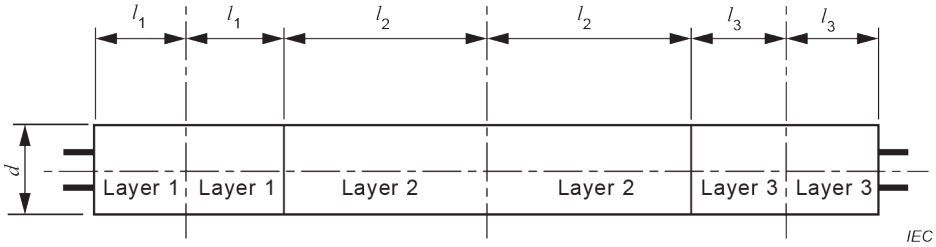

The drawing shows three layers.

Figure 3 – Location of measurement points on lamps with more than one layer

6.1.3 Single capped fluorescent UV Lamps

Single capped UV fluorescent lamps shall be operated during measurement such that the middle of the lamp bulb is at the same height as the centre of the entrance aperture of the sensor.

Single capped UV fluorescent lamps shall be operated during measurement such that both limbs have the same distance to the centre of the entrance aperture of the spectroradiometer (see 4.2 and Figure 1).

For single capped fluorescent UV lamps having more than two limbs, the measurement position that results in the highest measured erythema effective irradiance shall be specified by the manufacturer or responsible vendor.

6.2 Calculation of the total effective UV irradiance

The total effective UV irradiance shall be calculated from the spectral irradiance using the following formula:

$$E_{\text{eff}} = \Sigma\, E_{\lambda} \cdot S(\lambda) \cdot \Delta\lambda$$

where

E_{eff} is the total effective irradiance (W/m^2);

E_{λ} is the spectral irradiance (W/(m^2 · nm));

$S(\lambda)$ is the weighting factor according to the applicable action spectrum;

$\Delta\lambda$ is the wavelength interval (nm).

The wavelength interval for the calculation shall be 1 nm.

The applicable action spectra for erythema and non-melanoma skin cancer (NMSC) are given in Annex B.

For the total effective UV irradiance weighted according to the erythema action spectrum, the summation shall be performed over the following wavelength range: 250 nm ≤ λ ≤ 400 nm.

Documents
Document Sharing Hub
Full document details: IEC 61228-2020

For the total effective UV irradiance weighted according to the NMSC action spectrum, the summation shall be performed over two wavelength ranges: 250 nm ≤ λ ≤ 320 nm, and 320 nm ≤ λ ≤ 400 nm. The separate sums will be used in the specification of the equivalency code in Clause 8.

NOTE 1 The limit of 320 nm is chosen in accordance with IEC 60335-2-27, where, for this application, the CIE nomenclature UV-A and UV-B with a limit of 315 nm is not used.

NOTE 2 For evaluating the border wavelength of each wavelength interval accurate for calculating the total effective irradiance values, the trapezoid formula is used:

$$E_{\text{eff}} = 0{,}5 \cdot E_{\lambda}\left(\lambda = \lambda_{\text{u}}\right) \cdot S\left(\lambda = \lambda_{\text{u}}\right) + \sum_{\lambda_{\text{u}+1}}^{\lambda_{\text{o}-1}} E_{\lambda}\left(\lambda\right) \cdot S\left(\lambda\right) \cdot \Delta\lambda + 0{,}5 \cdot E_{\lambda}\left(\lambda = \lambda_{\text{o}}\right) \cdot S\left(\lambda = \lambda_{\text{o}}\right)$$

where

λ_{u} is the lower border wavelength of the wavelength interval;

λ_{o} is the upper border wavelength of the wavelength interval.

6.3 Ambient temperature adjustment

In order to arrive at the final total effective UV irradiance values, the following correction factor may have to be applied.

For lamps having the optimum UV irradiance at an ambient temperature other than 25 °C, a factor shall be applied to obtain the optimum UV irradiance, as specified in Annex A.

6.4 Reflector angle

The reflector angle of fluorescent UV lamps shall be measured by using a reflector angle gauge, in accordance with Annex D. The measurement of the reflector angle shall be performed in the middle of the lamp.

If the lamp to be measured is not covered by the gauge shown in Annex D (see Figure D.1), the measurement of the reflector angle shall be specified by the manufacturer or the responsible vendor.

6.5 Determination of the lamp maintenance code

Lamps shall be designated by a maintenance code in accordance with the ratio, r, of UV radiance measured at 500 h divided by the UV radiance measured at 5 h.

For expression in the equivalency code IR, (see Clause 8), the UV irradiance ratio, r, shall be multiplied by ten and the result rounded down to the next integer value.

7 Lamp specification

The following information shall be given for each lamp type in the manufacturer's documentation:

a) lamp dimensions;

b) for reflector lamps, the reflector angle α, i.e. the angle subtended at the lamp axis by the reflector coating;

c) the ballast (operation frequency, nominal wattage) for which the lamp is designed;

NOTE Operation frequency can either be 50 Hz/60 Hz and/or HF.

d) the rated electrical characteristics:

– lamp wattage;

Documents
Document Sharing Hub

Full document details: IEC 61228-2020