IEC 61290-10-5

Edition 1.0 2014-05

INTERNATIONAL STANDARD

NORME INTERNATIONALE

colour inside

Optical amplifiers – Test methods – Part 10-5: Multichannel parameters – Distributed Raman amplifier gain and noise figure

Amplificateurs optiques – Méthodes d'essai – Partie 10-5: Paramètres à canaux multiples – Gain et facteur de bruit des amplificateurs Raman répartis

IEC 61290-10-5:2014-05(en-fr)

Documents
Document Sharing Hub

Full document details: IEC 61290-10-5 2014

THIS PUBLICATION IS COPYRIGHT PROTECTED

Copyright © 2014 IEC, Geneva, Switzerland

All rights reserved. Unless otherwise specified, no part of this publication may be reproduced or utilized in any form or by any means, electronic or mechanical, including photocopying and microfilm, without permission in writing from either IEC or IEC's member National Committee in the country of the requester. If you have any questions about IEC copyright or have an enquiry about obtaining additional rights to this publication, please contact the address below or your local IEC member National Committee for further information.

Droits de reproduction réservés. Sauf indication contraire, aucune partie de cette publication ne peut être reproduite ni utilisée sous quelque forme que ce soit et par aucun procédé, électronique ou mécanique, y compris la photocopie et les microfilms, sans l'accord écrit de l'IEC ou du Comité national de l'IEC du pays du demandeur. Si vous avez des questions sur le copyright de l'IEC ou si vous désirez obtenir des droits supplémentaires sur cette publication, utilisez les coordonnées ci-après ou contactez le Comité national de l'IEC de votre pays de résidence.

IEC Central Office
3, rue de Varembé
CH-1211 Geneva 20
Switzerland

Tel.: +41 22 919 02 11
Fax: +41 22 919 03 00
info@iec.ch
www.iec.ch

About the IEC
The International Electrotechnical Commission (IEC) is the leading global organization that prepares and publishes International Standards for all electrical, electronic and related technologies.

About IEC publications
The technical content of IEC publications is kept under constant review by the IEC. Please make sure that you have the latest edition, a corrigenda or an amendment might have been published.

IEC Catalogue - webstore.iec.ch/catalogue
The stand-alone application for consulting the entire bibliographical information on IEC International Standards, Technical Specifications, Technical Reports and other documents. Available for PC, Mac OS, Android Tablets and iPad.

IEC publications search - www.iec.ch/searchpub
The advanced search enables to find IEC publications by a variety of criteria (reference number, text, technical committee,…). It also gives information on projects, replaced and withdrawn publications.

IEC Just Published - webstore.iec.ch/justpublished
Stay up to date on all new IEC publications. Just Published details all new publications released. Available online and also once a month by email.

Electropedia - www.electropedia.org
The world's leading online dictionary of electronic and electrical terms containing more than 30 000 terms and definitions in English and French, with equivalent terms in 14 additional languages. Also known as the International Electrotechnical Vocabulary (IEV) online.

IEC Glossary - std.iec.ch/glossary
More than 55 000 electrotechnical terminology entries in English and French extracted from the Terms and Definitions clause of IEC publications issued since 2002. Some entries have been collected from earlier publications of IEC TC 37, 77, 86 and CISPR.

IEC Customer Service Centre - webstore.iec.ch/csc
If you wish to give us your feedback on this publication or need further assistance, please contact the Customer Service Centre: csc@iec.ch.

A propos de l'IEC
La Commission Electrotechnique Internationale (IEC) est la première organisation mondiale qui élabore et publie des Normes internationales pour tout ce qui a trait à l'électricité, à l'électronique et aux technologies apparentées.

A propos des publications IEC
Le contenu technique des publications IEC est constamment revu. Veuillez vous assurer que vous possédez l'édition la plus récente, un corrigendum ou amendement peut avoir été publié.

Catalogue IEC - webstore.iec.ch/catalogue
Application autonome pour consulter tous les renseignements bibliographiques sur les Normes internationales, Spécifications techniques, Rapports techniques et autres documents de l'IEC. Disponible pour PC, Mac OS, tablettes Android et iPad.

Recherche de publications IEC - www.iec.ch/searchpub

La recherche avancée permet de trouver des publications IEC en utilisant différents critères (numéro de référence, texte, comité d'études,…). Elle donne aussi des informations sur les projets et les publications remplacées ou retirées.

IEC Just Published - webstore.iec.ch/justpublished

Restez informé sur les nouvelles publications IEC. Just Published détaille les nouvelles publications parues. Disponible en ligne et aussi une fois par mois par email.

Electropedia - www.electropedia.org

Le premier dictionnaire en ligne de termes électroniques et électriques. Il contient plus de 30 000 termes et définitions en anglais et en français, ainsi que les termes équivalents dans 14 langues additionnelles. Egalement appelé Vocabulaire Electrotechnique International (IEV) en ligne.

Glossaire IEC - std.iec.ch/glossary
Plus de 55 000 entrées terminologiques électrotechniques, en anglais et en français, extraites des articles Termes et Définitions des publications IEC parues depuis 2002. Plus certaines entrées antérieures extraites des publications des CE 37, 77, 86 et CISPR de l'IEC.

Service Clients - webstore.iec.ch/csc

Si vous désirez nous donner des commentaires sur cette publication ou si vous avez des questions contactez-nous: csc@iec.ch.

Documents
Document Sharing Hub

Full document details: IEC 61290-10-5 2014

IEC 61290-10-5

Edition 1.0 2014-05

INTERNATIONAL STANDARD

NORME INTERNATIONALE

colour inside

Optical amplifiers – Test methods – Part 10-5: Multichannel parameters – Distributed Raman amplifier gain and noise figure

Amplificateurs optiques – Méthodes d'essai – Partie 10-5: Paramètres à canaux multiples – Gain et facteur de bruit des amplificateurs Raman répartis

INTERNATIONAL ELECTROTECHNICAL COMMISSION

COMMISSION ELECTROTECHNIQUE INTERNATIONALE

PRICE CODE
CODE PRIX S

ICS 33.180.30

ISBN 978-2-8322-1581-4

Warning! Make sure that you obtained this publication from an authorized distributor.
Attention! Veuillez vous assurer que vous avez obtenu cette publication via un distributeur agréé.

AVA Documents
Document Sharing Hub

® Registered trademark of the International Electrotechnical Commission
Marque déposée de la Commission Electrotechnique Internationale

Full document details: IEC 61290-10-5 2014

CONTENTS

FOREWORD 3
1 Scope and object 5
2 Normative references 5
3 Terms, definitions and abbreviations 6
3.1 Terms and definitions 6
3.2 Abbreviated terms 7
4 DRA gain and noise figure parameters – Overview 7
5 Apparatus 9
5.1 General 9
5.2 Multi-channel signal source 10
5.3 Polarization controller 11
5.4 Optical spectrum analyser 11
5.5 Optical power meter 12
5.6 Tuneable narrowband source 12
5.7 Broadband optical source 12
5.8 Optical connectors and jumpers 12
6 Test sample 12
7 Procedure 12
7.1 Overview 12
7.1.1 Channel on-off gain 12
7.1.2 Pump module channel insertion loss and channel net gain 13
7.1.3 Channel equivalent noise figure (NF) 13
7.2 Calibration 13
7.2.1 Calibration of optical bandwidth 13
7.2.2 Calibration of OSA power correction factor 15
7.3 Measurement 15
7.4 Calculation 17
7.4.1 Channel on-off gain 17
7.4.2 Channel net gain 17
7.4.3 Channel equivalent NF 17
8 Test results 17
Annex A (informative) Field measurements versus laboratory measurements 19
Annex B (informative) Pump depletion and channel-to-channel Raman scattering 20
Bibliography 21

Figure 1 – Distributed Raman amplification in co-propagating (left) and count-propagating (right) configurations 9
Figure 2 – Measurement set-up without a pump module 10
Figure 3 – Measurement set-up for counter-propagating configuration 10
Figure 4 – Measurement set-up for co-propagating configuration 10
Figure 5 – Possible implementation of a multi-channel signal source 11

Documents
Document Sharing Hub
Full document details: IEC 61290-10-5 2014

INTERNATIONAL ELECTROTECHNICAL COMMISSION

OPTICAL AMPLIFIERS – TEST METHODS –

Part 10-5: Multichannel parameters – Distributed Raman amplifier gain and noise figure

FOREWORD

1) The International Electrotechnical Commission (IEC) is a worldwide organization for standardization comprising all national electrotechnical committees (IEC National Committees). The object of IEC is to promote international co-operation on all questions concerning standardization in the electrical and electronic fields. To this end and in addition to other activities, IEC publishes International Standards, Technical Specifications, Technical Reports, Publicly Available Specifications (PAS) and Guides (hereafter referred to as "IEC Publication(s)"). Their preparation is entrusted to technical committees; any IEC National Committee interested in the subject dealt with may participate in this preparatory work. International, governmental and non-governmental organizations liaising with the IEC also participate in this preparation. IEC collaborates closely with the International Organization for Standardization (ISO) in accordance with conditions determined by agreement between the two organizations.
2) The formal decisions or agreements of IEC on technical matters express, as nearly as possible, an international consensus of opinion on the relevant subjects since each technical committee has representation from all interested IEC National Committees.
3) IEC Publications have the form of recommendations for international use and are accepted by IEC National Committees in that sense. While all reasonable efforts are made to ensure that the technical content of IEC Publications is accurate, IEC cannot be held responsible for the way in which they are used or for any misinterpretation by any end user.
4) In order to promote international uniformity, IEC National Committees undertake to apply IEC Publications transparently to the maximum extent possible in their national and regional publications. Any divergence between any IEC Publication and the corresponding national or regional publication shall be clearly indicated in the latter.
5) IEC itself does not provide any attestation of conformity. Independent certification bodies provide conformity assessment services and, in some areas, access to IEC marks of conformity. IEC is not responsible for any services carried out by independent certification bodies.
6) All users should ensure that they have the latest edition of this publication.
7) No liability shall attach to IEC or its directors, employees, servants or agents including individual experts and members of its technical committees and IEC National Committees for any personal injury, property damage or other damage of any nature whatsoever, whether direct or indirect, or for costs (including legal fees) and expenses arising out of the publication, use of, or reliance upon, this IEC Publication or any other IEC Publications.
8) Attention is drawn to the Normative references cited in this publication. Use of the referenced publications is indispensable for the correct application of this publication.
9) Attention is drawn to the possibility that some of the elements of this IEC Publication may be the subject of patent rights. IEC shall not be held responsible for identifying any or all such patent rights.

International Standard IEC 61290-10-5 has been prepared by 86C: Fibre optic systems and active devices, of IEC technical committee 86: Fibre optics.

The text of this standard is based on the following documents:

CDV	Report on voting
86C/1142/CDV	86C/1233/RVC

Full information on the voting for the approval of this standard can be found in the report on voting indicated in the above table.

This publication has been drafted in accordance with the ISO/IEC Directives, Part 2.

AVA Documents
Document Sharing Hub

Full document details: IEC 61290-10-5 2014

A list of all parts in the IEC 61290 series, published under the general title *Optical amplifiers – Test methods*, can be found on the IEC website.

The committee has decided that the contents of this publication will remain unchanged until the stability date indicated on the IEC web site under "http://webstore.iec.ch" in the data related to the specific publication. At this date, the publication will be

- reconfirmed,
- withdrawn,
- replaced by a revised edition, or
- amended.

IMPORTANT – The 'colour inside' logo on the cover page of this publication indicates that it contains colours which are considered to be useful for the correct understanding of its contents. Users should therefore print this document using a colour printer.

Documents
Document Sharing Hub

Full document details: IEC 61290-10-5 2014

OPTICAL AMPLIFIERS – TEST METHODS –

Part 10-5: Multichannel parameters – Distributed Raman amplifier gain and noise figure

1 Scope and object

This part of IEC 61290 applies to distributed Raman amplifiers (DRAs). DRAs are based on the process whereby Raman pump power is introduced into the transmission fibre, leading to signal amplification within the transmission fibre through stimulated Raman scattering. A detailed overview of the technology and applications of DRAs can be found in IEC TR 61292-6.

A fundamental difference between these amplifiers and discrete amplifiers, such as EDFAs, is that the latter can be described using a black box approach with well-defined input and output ports. On the other hand, a DRA is basically a pump module, with the actual amplification process taking place along the transmission fibre. This difference means that standard methods described in other parts of IEC 61290 for measuring amplifier parameters, such as gain and noise figure, cannot be applied without modification.

The object of this standard is to establish uniform requirements for accurate and reliable measurements, using an optical spectrum analyser (OSA), of the following DRA parameters:

a) channel on-off gain;

b) pump unit insertion loss;

c) channel net gain;

d) channel signal-spontaneous noise figure.

The measurement method is largely based on the interpolated source subtraction (ISS) method using an optical spectrum analyser, as described and elaborated in IEC 61290-10-4, with relevant modifications relating to a DRA.

All numerical values followed by (‡) are suggested values for which the measurement is assured. Other values may be acceptable but should be verified.

NOTE General aspects of noise figure test methods are reported in IEC 61290-3.

2 Normative references

The following documents, in whole or in part, are normatively referenced in this document and are indispensable for its application. For dated references, only the edition cited applies. For undated references, the latest edition of the referenced document (including any amendments) applies.

IEC 60825-1, *Safety of laser products – Part 1: Equipment classification and requirements*

IEC 61291-1, *Optical amplifiers – Part 1: Generic specification*

IEC 61291-4, *Optical amplifiers – Part 4: Multichannel applications – Performance specification template*

Documents
Document Sharing Hub

Full document details: IEC 61290-10-5 2014

IEC TR 61292-4, *Optical amplifiers – Part 4: Maximum permissible optical power for the damage-free and safe use of optical amplifiers, including Raman amplifiers*

3 Terms, definitions and abbreviations

3.1 Terms and definitions

3.1.1
Raman pump power
optical power produced by the DRA to enable Raman amplification of signal channels

Note 1 to entry: The Raman pump power shall be at a lower wavelength than the signal channels.

3.1.2
fibre span
length of fibre into which signal channels and Raman pump power are introduced, and Raman amplification of the signal channels takes place via stimulated Raman scattering

3.1.3
co-propagating configuration
forward pumping configuration
configuration whereby the Raman pump power is coupled to the input of the fibre span such that the signal channels and Raman pump power propagate in the same (forward) direction

3.1.4
counter-propagating configuration
backward pumping configuration
configuration whereby the Raman pump power is coupled to the output of the fibre span such that the signal channels and Raman pump power propagate in opposite directions

3.1.5
pump module
module that produces Raman pump power and couples it into the connected fibre span

Note 1 to entry: If the pump module is connected to the input of the fibre span, then both the incoming signal channels and Raman pump power are coupled to the fibre span.

Note 2 to entry: If the pump module is connected to the output of the fibre span, then the pump power is coupled into the fibre span, while the signal channels exiting the fibre span pass through the pump module from the input port to the output port.

Note 3 to entry: In this standard, the convention will be used whereby the input port of the pump module is defined as the port into which the signal channels enter, while the output port is defined as the port through which the signal channels exit. Thus, in co-propagating configuration the Raman pump power exits the pump module from the output port, while in counter-propagating configuration the Raman pump power exits the pump module from the input port.

3.1.6
channel on-off gain
$G_{\text{on-off}}$
ratio of the channel power at the output of the fibre span when the pump module is operational to the channel power at the same point when the pump module is not operational

3.1.7
pump module channel insertion loss
IL
ratio of the channel power at the input of the pump module to the channel power at the output of the pump module

Documents
Document Sharing Hub
Full document details: IEC 61290-10-5 2014

3.1.8
channel net gain
G_{net}
channel on-off gain minus the pump module channel insertion loss, in dB

3.1.9
channel equivalent noise figure
$NF_{sig\text{-}ASE,eq}$
channel noise figure due to signal-spontaneous beat noise (see IEC 61290-3) of an equivalent discrete amplifier placed at the output of the fibre span which has the same channel gain as the DRA channel on-off gain, and generates the same amount of ASE as that generated by the DRA at the output of the fibre span.

3.2 Abbreviated terms

ASE	amplified spontaneous emission
DRA	distributed Raman amplifier
EDFA	Erbium doped fibre amplifier
FWHM	full-width half-maximum
GFF	gain flattening filter
ISS	interpolated source subtraction
NF	noise figure
RBW	resolution bandwidth
OSA	optical spectrum analyser
OSNR	optical signal-to-noise ratio
PCF	power correction factor
SMF	single-mode fibre
SSE	source spontaneous emission
VOA	variable optical attenuator

4 DRA gain and noise figure parameters – Overview

NOTE Unless specifically stated otherwise, all equation and definitions in this clause and onwards are given in linear units, and not dB.

Figure 1 shows the application of DRAs in co-propagating (forward pumping) and counter-propagating (backward pumping) configurations. As a general rule, counter propagating configuration is much more widely used compared to co-propagating configuration.

As with any amplifier, one of the main parameters of interest is the channel gain (see IEC 61291-1 and IEC 61291-4). However, unlike discrete amplifiers, where the channel gain is simply defined as the ratio of the channel power at the output port to the channel power at the input port, with a DRA, the situation is more complex. In principle, the DRA includes both the pump module, which supplies the pump power, and the fibre span, where the actual amplification takes place. Thus, one option for defining channel gain is to define it as the ratio of the channel power at point C (Figure 1) to the channel power at point A, while the pumps are operational. However, since this definition also include the fibre span loss, which is often larger than the gain supplied by the Raman pumps, this definition is not very useful.

A much more useful quantity is the channel on-off gain, which is defined as the ratio of the channel power at the output of the fibre span when the Raman pumps are on to the channel power at the same point but when the pumps are off (see the graphs in Figure 1).

Documents
Document Sharing Hub
Full document details: IEC 61290-10-5 2014

$$G_{\text{on-off}} = \frac{P_{\text{on}}}{P_{\text{off}}} \tag{1}$$

In practice, the channel on-off gain may be measured at any point following the fibre span, for example point C for co-propagating configuration, or points B and C for the counter-propagating configuration.

Another parameter of interest for DRAs is the pump module channel insertion loss, which is defined as the ratio of the channel power at the input port of the pump module to the channel power at the output port of the pump module (points A and B for co-propagating configuration, and points B and C for counter propagating configuration).

$$IL = \frac{P_{\text{pump unit input}}}{P_{\text{pump unit output}}} \tag{2}$$

Since no amplification takes place within the pump module, this is just passive insertion loss, and is not affected by the status of the pumps (on or off).

The channel on-off gain and pump module channel insertion loss can be combined into a single quantity, the channel net gain, which is defined in dB as

$$G_{\text{net}}(\text{dB}) = G_{\text{on-off}}(\text{dB}) - IL(\text{dB}) \tag{3}$$

The channel net gain is particularly useful for counter-propagating configuration, as it may be directly measured in linear units as the ratio of the channel power at point C when the pumps are on to the channel power at point B when the pumps are off. When the pump module includes a gain flattening filter (GFF) to tailor the spectral shape of the Raman gain, then the channel net gain includes the effect of the GFF, as opposed to the channel on-off gain which does not (i.e. the channel on-off gain has a non-flat dependence on the channel wavelength). For the co-propagating configuration, the channel net gain has less physical meaning, and it is more common to separately define the channel on-off gain and pump module channel insertion loss.

Another important parameter relevant to a DRA is the channel equivalent noise figure (NF) due to signal-spontaneous beat noise. This quantity is only relevant to counter-propagating configuration. The channel equivalent NF of a DRA is defined as the NF of an equivalent discrete amplifier placed at the output of the fibre span, which provides the same amount of channel gain as the DRA channel on-off gain, and generates the same amount of amplified spontaneous emission (ASE) as that generated at the fibre span output by the DRA. The channel equivalent noise figure (in dB) due to signal-spontaneous beat noise is given by (see IEC 61290-3):

$$NF_{\text{sig-ASE,eq}} = 10\log_{10}\left(\rho_{\text{ASE,B}} / \left(G_{\text{on-off}} h\nu\right)\right) \tag{4}$$

where

$\rho_{\text{ASE,B}}$ is the ASE spectral density at the channel wavelength λ (in both polarization modes) measured at the output of the fibre span (point B in the counter-propagating configuration of Figure 1);

$\nu = c / \lambda$ is the channel frequency;

h is Planck's constant.

Using the relation between the channel on-off gain and the channel net gain, it is easily shown that the channel equivalent NF is also given by

AVA Documents Document Sharing Hub

Full document details: IEC 61290-10-5 2014

$$NF_{\text{sig-ASE,eq}} = 10\log_{10}\left(\rho_{\text{ASE,C}} / \left(G_{\text{net}} h\nu\right)\right) \quad (5)$$

where

$\rho_{\text{ASE,C}}$ is now measured at point C.

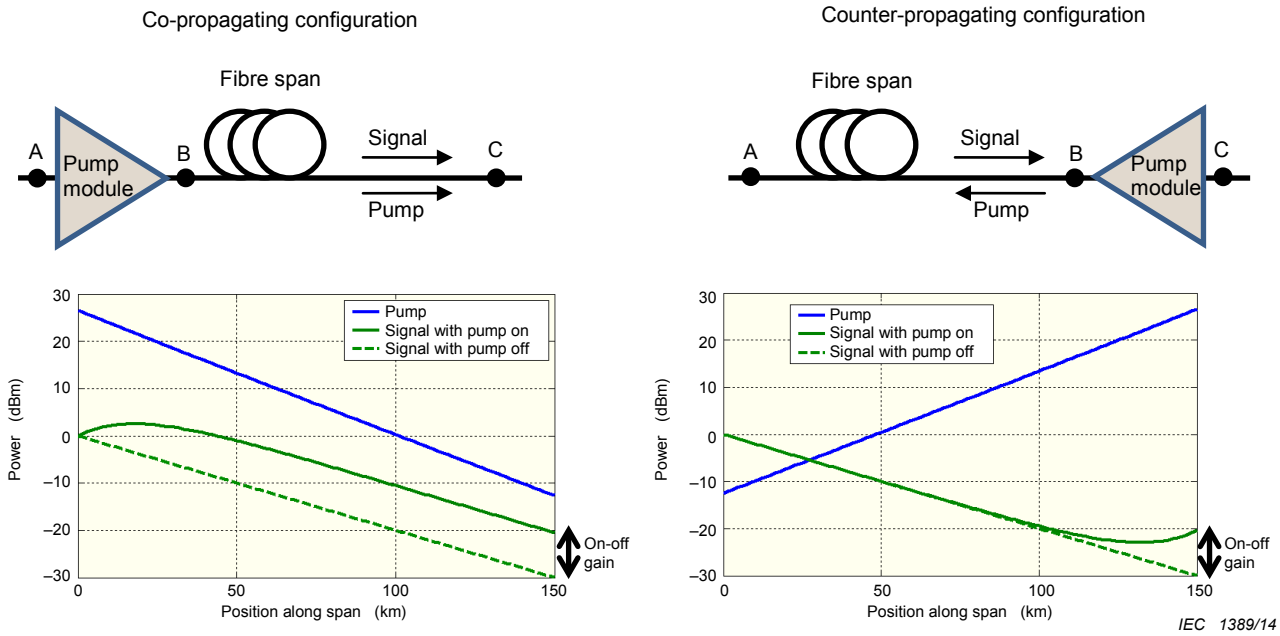

NOTE The graphs show the evolution of pump and signal along the fibre span.

Figure 1 – Distributed Raman amplification in co-propagating (left) and count-propagating (right) configurations

When measuring DRA gain and NF, the following issues should be considered:

a) The purpose of the measurement: whether the purpose is to measure the DRA performance in relation to a specific span of fibre in the field, or characterize DRA performance with respect to a generic fibre type in the laboratory. This is elaborated in Annex A.

b) Whether or not the input signal configuration can affect the measurement due to pump depletion and/or signal-signal Raman scattering. This is elaborated in Annex B.

5 Apparatus

5.1 General

Figures 2 through 4 show the measurement set-up for measurement of DRA parameters in counter-propagating and co-propagating configurations. The various components comprising the set-up (as well as other components used for calibration) are described in the following subclauses.

Documents
Document Sharing Hub
Full document details: IEC 61290-10-5 2014

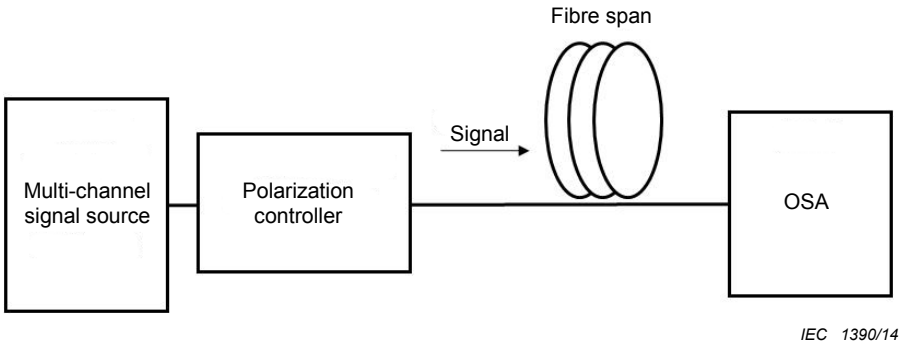

Figure 2 – Measurement set-up without a pump module

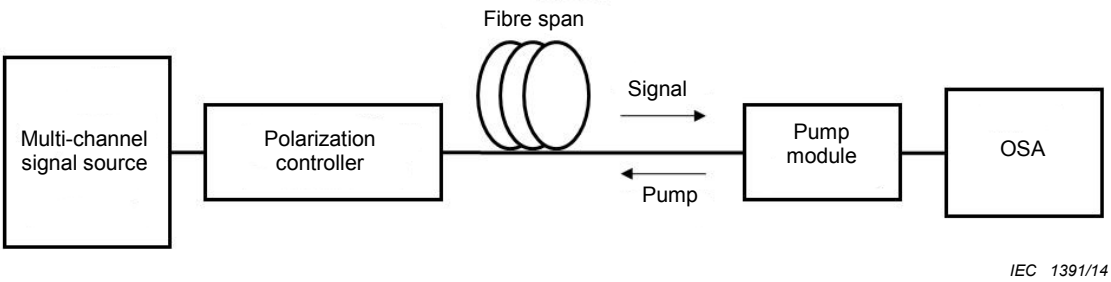

Figure 3 – Measurement set-up for counter-propagating configuration

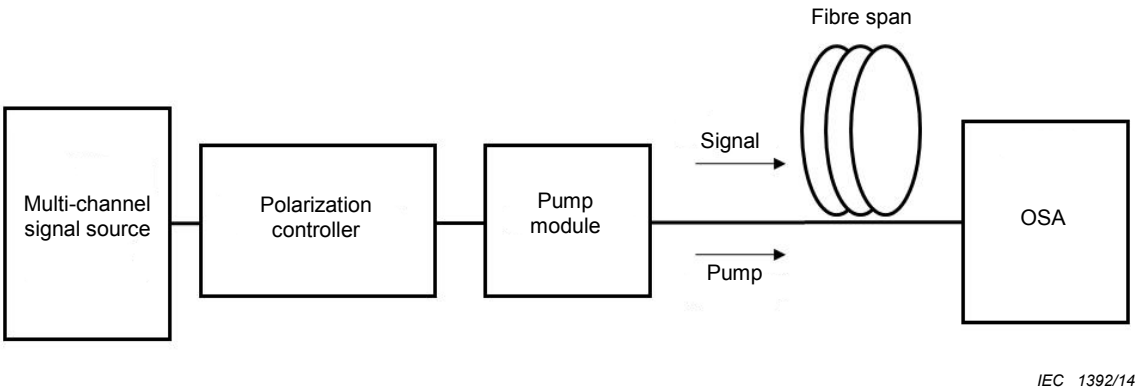

Figure 4 – Measurement set-up for co-propagating configuration

5.2 Multi-channel signal source

Figure 5 shows a possible implementation of a multi-channel signal source. This optical source should consist of n laser sources where n is the number of channels for the test configuration. The full width at half maximum (FWHM) of the output spectrum of each laser source shall be narrower than 0,1 nm (‡)[1] so as not to cause any interference to adjacent channels. The suppression ratio of the side modes of the single-line laser shall be higher than 35 dB (‡). The output power fluctuation shall be less than 0,05 dB (‡), which is more easily attainable with an optical isolator placed at the output port of each source. The wavelength

[1] Suggested value.

Documents
Document Sharing Hub
Full document details: IEC 61290-10-5 2014

accuracy shall be better than ±0,1 nm (‡) with stability better than ±0,01 nm (‡). The spontaneous emission power within a 1 nm window surrounding the laser wavelength should be at least 40 dB below the laser output power.

The purpose of the channel combiner is to multiplex all the laser sources onto a single fibre. The channel combiner should have polarization dependent loss better than 0,5 dB (‡), and wavelength dependent loss better than 1 dB (‡).The reflectance from this device shall be smaller than –50 dB (‡) at each port.

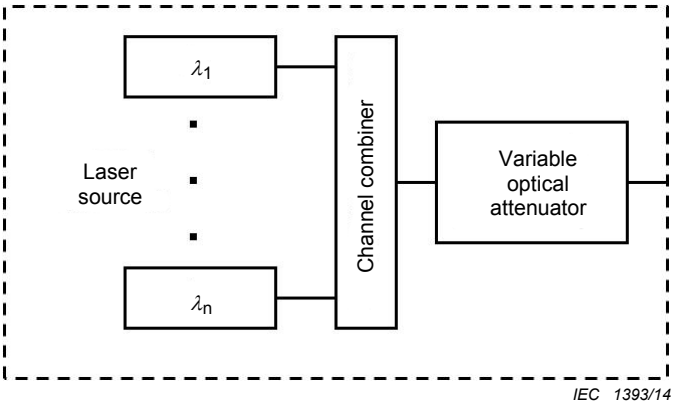

Figure 5 – Possible implementation of a multi-channel signal source

The multi-channel signal source should provide the ability to control the power of each individual laser, so as to achieve a desired power configuration of the channels. This can be achieved either through direct control of each laser source, or by placing a variable optical attenuator (VOA) after each laser source. The multi-channel signal source should preferably also provide the ability to control the power of all the sources simultaneously, e.g. using a variable optical attenuator (VOA) as shown in Figure 5. If one or more VOA is used, then its attenuation range and stability shall be over 40 dB (‡) and better than 0,1 dB (‡), respectively. The reflectance from this device shall be smaller than –50 dB (‡) at each port. If a VOA is placed after the channel combiner, the wavelength flatness over the full range of attenuation shall be less than 0,5 dB (‡).

5.3 Polarization controller

This device shall be able to convert any state of polarization of a signal to any other state of polarization. The polarization controller may consist of an all-fibre polarization controller or a quarter-wave plate rotatable by a minimum of 90°, followed by a half-wave plate rotatable by a minimum of 180°. The reflectance of this device shall be smaller than –50 dB (‡) at each port. The insertion loss variation of this device shall be less than 0,5 dB (‡). The use of a polarization controller is considered optional, but may be necessary to achieve the desired accuracy for cases when the DRA exhibits significant polarization dependent gain.

5.4 Optical spectrum analyser

The optical spectrum analyser (OSA) shall have polarization sensitivity less than 0,1 dB (‡), stability better than 0,1 dB (‡) and wavelength accuracy better than 0,05 nm (‡). The linearity should be better than 0,2 dB (‡) over the device dynamic range. The reflectance from this device shall be smaller than –50 dB (‡) at its input port. The OSA shall have sufficient dynamic range and support sufficiently small resolution bandwidth (RBW) to measure the noise between channels. For 100 GHz (0,8 nm) channel spacing, the dynamic range shall be greater than 55 dB at 50 GHz (0,4 nm) from the signal.

Documents
Document Sharing Hub
Full document details: IEC 61290-10-5 2014

5.5 Optical power meter

This device, which may be required for the calibration of the OSA, shall have a measurement accuracy better than 0,2 dB (‡), irrespective of the state of polarization, within the operational wavelength bandwidth of the DRA and within the power range from –40 dBm to +20 dBm (‡).

5.6 Tuneable narrowband source

This device, which may be required for the calibration of the OSA, shall be tuneable over the operational wavelength bandwidth of the DRA (for example, 1 530 nm to 1 565 nm). The full width at half maximum (FWHM) of the output spectrum of the narrowband source shall be narrower than 0,1 nm (‡).The wavelength accuracy shall be better than ±0,1 nm (‡) with stability better than ±0,01 nm (‡). The output power fluctuation shall be less than 0,1 dB (‡). The output power shall remain stable to within 0,1 dB (‡) while tuning the wavelength over the measurement bandwidth range (typically 10 nm).

5.7 Broadband optical source

This device, which may be required for the calibration of the OSA, shall provide broadband optical power over the operational wavelength bandwidth of the DRA (for example, 1 530 nm to 1 565 nm). The output spectrum shall be flat with less than a 0,1 dB (‡) variation over the measurement bandwidth range (typically 10 nm). The output power fluctuation shall be less than 0,1 dB (‡).

For example, the ASE generated by an optical fibre amplifier with no input signal applied could be used as a broadband optical source.

5.8 Optical connectors and jumpers

Optical connectors and jumpers, which may be used to connect the various components in Figures 2 through 4, should have a connection loss repeatability better than 0,1 dB (‡). Preferably, the reflectance from optical connectors when used shall be smaller than –50 dB (‡). Preferably, jumper length shall be short (<2 m), and jumpers shall remain undisturbed during the duration of the measurement in order to minimize state of polarization change.

6 Test sample

The DRA under test, which consists of both the pump module and the fibre span, shall operate at nominal operating conditions. Care shall be taken in maintaining the state of polarization of the input light during the measurement. Changes in the polarization state of the input light may result in input optical power changes because of the slight polarization dependency expected from all the used optical components, leading to measurement errors

Due to high Raman pump power typically used in the measurement, laser safety procedures should be implemented and followed as described in IEC 60825-1. In addition, extra care should be taken with respect to connector cleanliness and avoidance of fibre bends, as described in IEC TR 61292-4.

Connection loss between the pump module and fibre span should be minimized as much as possible (preferably <0,2 dB) in order not to affect the measurement results.

7 Procedure

7.1 Overview

7.1.1 Channel on-off gain

For measuring the channel on-off gain, the following parameters shall be measured:

Documents
Document Sharing Hub

Full document details: IEC 61290-10-5 2014

a) The signal power level for each channel when the pump module is off (i.e. not emitting Raman pump power), using the set-up shown in Figure 3 for counter-propagating configuration, or the set-up shown in Figure 4 for co-propagating configuration.

b) The signal power level for each channel when the pump module is on (i.e. emitting Raman pump power), using the set-up shown in Figure 3 for counter-propagating configuration, or the set-up shown in Figure 4 for co-propagating configuration.

7.1.2 Pump module channel insertion loss and channel net gain

For measuring the pump module channel insertion loss and the channel net gain, the following parameters shall be measured:

a) The signal power level for each channel according to the set-up shown in Figure 2.

b) The signal power level for each channel when the pump sources within the pump module are off (i.e. not emitting Raman pump power), using the set-up shown in Figure 3 for counter-propagating configuration, or the set-up shown in Figure 4 for co-propagating configuration.

c) The signal power level for each channel when the pump sources within the pump module are on (i.e. emitting Raman pump power), using the set-up shown in Figure 3 for counter-propagating configuration, or the set-up shown in Figure 4 for co-propagating configuration

7.1.3 Channel equivalent noise figure (NF)

For measuring the channel equivalent NF for counter-propagating configuration, the following parameters should be measured:

a) The signal power level for each channel using the set-up shown in Figure 2.

b) The source spontaneous emission (SSE) spectral power density at the wavelength of each channel using the set-up shown in Figure 2.

c) The signal power level for each channel when the pump module is on (i.e. emitting Raman pump power) using the set-up shown in Figure 3.

d) The ASE spectral power density at the wavelength of each channel when the pump sources within the pump module are on (i.e. emitting Raman pump power) using the set-up shown in Figure 3.

The noise-equivalent bandwidth of the OSA is required for the measurement of SSE and ASE spectral power density. If not specified by the manufacturer to sufficient accuracy, it may be calibrated using one of the two methods below. The noise-equivalent bandwidth of a wavelength filter is the bandwidth of a theoretical filter with rectangular pass-band and the same transmission at the centre wavelength that would pass the same total noise power as the actual filter when the source power density is constant versus wavelength.

7.2 Calibration

7.2.1 Calibration of optical bandwidth

7.2.1.1 General

The noise-equivalent bandwidth, B_o, can be calibrated using one of the following two methods, based on the use of either a tuneable narrowband optical source or a broadband optical source.

For both methods, the following approximate equation permits converting the optical bandwidth from the wavelength domain, $\Delta\lambda_{BW}(\lambda_s)$, to the frequency domain, $B_o(\lambda_s)$:

$$B_o(\lambda_S) = c\left[(\lambda_s - \Delta\lambda_{BW}(\lambda_s)/2)^{-1} - (\lambda_s + \Delta\lambda_{BW}(\lambda_s)/2)^{-1}\right] \quad (6)$$

Documents
Document Sharing Hub
Full document details: IEC 61290-10-5 2014