IEC 61290-3-2

Edition 2.0 2008-07

INTERNATIONAL STANDARD

NORME INTERNATIONALE

Optical amplifiers – Test methods –
Part 3-2: Noise figure parameters – Electrical spectrum analyzer method

Amplificateurs optiques – Méthodes d'essais -
Partie 3-2: Paramètres du facteur de bruit – Méthode de l'analyseur spectral électrique

IEC 61290-3-2:2008

Documents
Document Sharing Hub

Full document details: IEC 61290-3-2 2008

THIS PUBLICATION IS COPYRIGHT PROTECTED

Copyright © 2008 IEC, Geneva, Switzerland

All rights reserved. Unless otherwise specified, no part of this publication may be reproduced or utilized in any form or by any means, electronic or mechanical, including photocopying and microfilm, without permission in writing from either IEC or IEC's member National Committee in the country of the requester.
If you have any questions about IEC copyright or have an enquiry about obtaining additional rights to this publication, please contact the address below or your local IEC member National Committee for further information.

Droits de reproduction réservés. Sauf indication contraire, aucune partie de cette publication ne peut être reproduite ni utilisée sous quelque forme que ce soit et par aucun procédé, électronique ou mécanique, y compris la photocopie et les microfilms, sans l'accord écrit de la CEI ou du Comité national de la CEI du pays du demandeur.
Si vous avez des questions sur le copyright de la CEI ou si vous désirez obtenir des droits supplémentaires sur cette publication, utilisez les coordonnées ci-après ou contactez le Comité national de la CEI de votre pays de résidence.

IEC Central Office
3, rue de Varembé
CH-1211 Geneva 20
Switzerland
Email: inmail@iec.ch
Web: www.iec.ch

About the IEC

The International Electrotechnical Commission (IEC) is the leading global organization that prepares and publishes International Standards for all electrical, electronic and related technologies.

About IEC publications

The technical content of IEC publications is kept under constant review by the IEC. Please make sure that you have the latest edition, a corrigenda or an amendment might have been published.

- Catalogue of IEC publications: www.iec.ch/searchpub
The IEC on-line Catalogue enables you to search by a variety of criteria (reference number, text, technical committee,…). It also gives information on projects, withdrawn and replaced publications.
- IEC Just Published: www.iec.ch/online_news/justpub
Stay up to date on all new IEC publications. Just Published details twice a month all new publications released. Available on-line and also by email.
- Electropedia: www.electropedia.org
The world's leading online dictionary of electronic and electrical terms containing more than 20 000 terms and definitions in English and French, with equivalent terms in additional languages. Also known as the International Electrotechnical Vocabulary online.
- Customer Service Centre: www.iec.ch/webstore/custserv
If you wish to give us your feedback on this publication or need further assistance, please visit the Customer Service Centre FAQ or contact us:
Email: csc@iec.ch
Tel.: +41 22 919 02 11
Fax: +41 22 919 03 00

A propos de la CEI

La Commission Electrotechnique Internationale (CEI) est la première organisation mondiale qui élabore et publie des normes internationales pour tout ce qui a trait à l'électricité, à l'électronique et aux technologies apparentées.

A propos des publications CEI

Le contenu technique des publications de la CEI est constamment revu. Veuillez vous assurer que vous possédez l'édition la plus récente, un corrigendum ou amendement peut avoir été publié.

- Catalogue des publications de la CEI: www.iec.ch/searchpub/cur_fut-f.htm
Le Catalogue en-ligne de la CEI vous permet d'effectuer des recherches en utilisant différents critères (numéro de référence, texte, comité d'études,…). Il donne aussi des informations sur les projets et les publications retirées ou remplacées.
- Just Published CEI: www.iec.ch/online_news/justpub
Restez informé sur les nouvelles publications de la CEI. Just Published détaille deux fois par mois les nouvelles publications parues. Disponible en-ligne et aussi par email.
- Electropedia: www.electropedia.org
Le premier dictionnaire en ligne au monde de termes électroniques et électriques. Il contient plus de 20 000 termes et définitions en anglais et en français, ainsi que les termes équivalents dans les langues additionnelles. Egalement appelé Vocabulaire Electrotechnique International en ligne.
- Service Clients: www.iec.ch/webstore/custserv/custserv_entry-f.htm
Si vous désirez nous donner des commentaires sur cette publication ou si vous avez des questions, visitez le FAQ du Service clients ou contactez-nous:
Email: csc@iec.ch
Tél.: +41 22 919 02 11
Fax: +41 22 919 03 00

Documents
Document Sharing Hub

Full document details: IEC 61290-3-2 2008

IEC 61290-3-2

Edition 2.0 2008-07

INTERNATIONAL STANDARD

NORME INTERNATIONALE

Optical amplifiers – Test methods – Part 3-2: Noise figure parameters – Electrical spectrum analyzer method

Amplificateurs optiques – Méthodes d'essais - Partie 3-2: Paramètres du facteur de bruit – Méthode de l'analyseur spectral électrique

INTERNATIONAL
ELECTROTECHNICAL
COMMISSION

COMMISSION
ELECTROTECHNIQUE
INTERNATIONALE

PRICE CODE
CODE PRIX

Q

ICS 33.180.30

ISBN 2-8318-9898-6

® Registered trademark of the International Electrotechnical Commission
Marque déposée de la Commission Electrotechnique Internationale

Documents
Document Sharing Hub

Full document details: IEC 61290-3-2 2008

CONTENTS

FOREWORD 3
INTRODUCTION 5
1 Scope and object 6
2 Normative references 6
3 Symbols, acronyms and abbreviations 7
4 Apparatus 8
5 Test specimen 10
6 Procedure 10
6.1 Frequency-scanning technique: calibration 11
6.2 Frequency-scanning technique: measurement 12
6.3 Selected-frequency technique: calibration and measurement 13
6.4 Measurement accuracy limitations 13
7 Calculation 14
7.1 Calculation of calibration results 14
7.2 Calculation of test results for the frequency-scanning technique 15
7.3 Calculation of test results for the selected-frequency technique 15
8 Test results 16
Bibliography 17

Figure 1 – Scheme of a measurement set-up 9

Documents
Document Sharing Hub

Full document details: IEC 61290-3-2 2008

INTERNATIONAL ELECTROTECHNICAL COMMISSION

OPTICAL AMPLIFIERS – TEST METHODS –

Part 3-2: Noise figure parameters – Electrical spectrum analyzer method

FOREWORD

1) The International Electrotechnical Commission (IEC) is a worldwide organization for standardization comprising all national electrotechnical committees (IEC National Committees). The object of IEC is to promote international co-operation on all questions concerning standardization in the electrical and electronic fields. To this end and in addition to other activities, IEC publishes International Standards, Technical Specifications, Technical Reports, Publicly Available Specifications (PAS) and Guides (hereafter referred to as "IEC Publication(s)"). Their preparation is entrusted to technical committees; any IEC National Committee interested in the subject dealt with may participate in this preparatory work. International, governmental and non-governmental organizations liaising with the IEC also participate in this preparation. IEC collaborates closely with the International Organization for Standardization (ISO) in accordance with conditions determined by agreement between the two organizations.
2) The formal decisions or agreements of IEC on technical matters express, as nearly as possible, an international consensus of opinion on the relevant subjects since each technical committee has representation from all interested IEC National Committees.
3) IEC Publications have the form of recommendations for international use and are accepted by IEC National Committees in that sense. While all reasonable efforts are made to ensure that the technical content of IEC Publications is accurate, IEC cannot be held responsible for the way in which they are used or for any misinterpretation by any end user.
4) In order to promote international uniformity, IEC National Committees undertake to apply IEC Publications transparently to the maximum extent possible in their national and regional publications. Any divergence between any IEC Publication and the corresponding national or regional publication shall be clearly indicated in the latter.
5) IEC provides no marking procedure to indicate its approval and cannot be rendered responsible for any equipment declared to be in conformity with an IEC Publication.
6) All users should ensure that they have the latest edition of this publication.
7) No liability shall attach to IEC or its directors, employees, servants or agents including individual experts and members of its technical committees and IEC National Committees for any personal injury, property damage or other damage of any nature whatsoever, whether direct or indirect, or for costs (including legal fees) and expenses arising out of the publication, use of, or reliance upon, this IEC Publication or any other IEC Publications.
8) Attention is drawn to the Normative references cited in this publication. Use of the referenced publications is indispensable for the correct application of this publication.
9) Attention is drawn to the possibility that some of the elements of this IEC Publication may be the subject of patent rights. IEC shall not be held responsible for identifying any or all such patent rights.

International Standard IEC 61290-3-2 has been prepared by subcommittee 86C: Fibre optic systems and active devices, of IEC technical committee 86: Fibre optics.

This second edition cancels and replaces the first edition published in 2003 and constitutes a technical revision. It includes updates to specifically address all types of optical amplifiers – not just optical fibre amplifiers.

This standard should be read in conjunction with IEC 61290-3 and IEC 61291-1.

Documents
Document Sharing Hub

Full document details: IEC 61290-3-2 2008

The text of this standard is based on the following documents:

CDV	Report on voting
86C/784/CDV	86C/828/RVC

Full information on the voting for the approval of this standard can be found in the report on voting indicated in the above table.

This publication has been drafted in accordance with the ISO/IEC Directives, Part 2.

A list of all parts of IEC 61290 series, published under the general title *Optical amplifiers – Test methods,* can be found on the IEC website.

The committee has decided that the contents of this publication will remain unchanged until the maintenance result date indicated on the IEC web site under "http://webstore.iec.ch" in the data related to the specific publication. At this date, the publication will be

- reconfirmed,
- withdrawn,
- replaced by a revised edition, or
- amended.

Documents
Document Sharing Hub

Full document details: IEC 61290-3-2 2008

INTRODUCTION

This part of IEC 61290 is devoted to the subject of optical amplifiers. The technology of optical amplifiers is still rapidly evolving, hence amendments and new additions to this standard can be expected.

Each symbol and abbreviation introduced in this standard is generally explained in the text the first time it appears. However, for an easier understanding of the whole text, a list of all symbols and abbreviations used in this standard is given in Clause 3.

Documents
Document Sharing Hub

Full document details: IEC 61290-3-2 2008

OPTICAL AMPLIFIERS – TEST METHODS –

Part 3-2: Noise figure parameters – Electrical spectrum analyzer method

1 Scope and object

This part of IEC 61290 applies to all commercially available optical amplifiers (OAs), including OAs using optically pumped fibres (OFAs based on either rare-earth doped fibres or on the Raman effect), semiconductor optical amplifiers (SOAs) and planar waveguide optical amplifiers (PWOAs).

The object of this standard is to establish uniform requirements for accurate and reliable measurements, by means of the electrical spectrum analyzer (ESA) method, of the noise figure, as defined in IEC 61291-1.

The present test method is based on direct electrical noise measurement and it is directly related to its definition including all relevant noise contributions. Therefore, this method can be used for all types of optical amplifiers, including SOA and Raman amplifiers which can have significant contributions besides amplified spontaneous emission, because it measures the total noise figure. For further details of applicability, see IEC 61290-3. An alternative test method based on the optical spectrum analyzer can be used, particularly for different noise parameters (such as the signal-spontaneous noise factor) but it is not included in the object of this standard.

NOTE 1 All numerical values followed by (‡) are suggested values for which the measurement is assured. Other values may be acceptable but should be verified.

NOTE 2 A measurement accuracy for the average noise factor of ±20 %(‡), respectively ±1 dB, should be attainable with this method (see Clause 6).

NOTE 3 General aspects of noise figure test methods are reported in IEC 61290-3.

2 Normative references

The following referenced documents are indispensable for the application of this document. For dated references, only the edition cited applies. For undated references, the latest edition of the referenced document (including any amendments) applies.

IEC 60728-6, *Cable networks for television signals, sound signals and interactive services – Part 6: Optical equipment*

IEC 61290-3: *Optical fibre amplifiers – Basic specification – Part 3: Test methods for noise figure parameters*[1]

IEC 61291-1, *Optical amplifiers – Part 1: Generic specification*

NOTE A list of informative references is given in the bibliography.

---

[1] The first editions of some of these parts were published under the general title *Optical fibre amplifiers – Basic specification* or *Optical amplifiers – Test methods*. Future editions of these parts will appear under the new general title listed above. The individual titles of Parts 1-1, 3-1, 5-2, 10-1, 10-2, 10-3, 11-1 and 11-2 will be updated in future editions of these parts to reflect the overall structure of the series.

AVA Documents
Document Sharing Hub

Full document details: IEC 61290-3-2 2008

3 Symbols, acronyms and abbreviations

For the purposes of this document, the following symbols, acronyms and abbreviations apply.

B_e	calibrated, noise equivalent ESA electrical bandwidth (not necessarily the resolution bandwidth)
c	speed of light in vacuum
e	electron charge
f	baseband frequency
F	(total) noise factor
$F_{non\text{-}mpi}$,	frequency-independent contribution to total noise factor
F_{mpi}	noise factor contribution from multiple path interference noise (OA internal reflections)
G	OA optical signal gain
h	Planck's constant
k	optical power reduction factor (default k = 0,5); it can be obtained by taking the square root of the electrical power reduction factor
ν	optical frequency = c/λ
$\Delta\nu$	source FWHM linewidth with modulation on
H_0, $H_0(f)$	$S_{esa}/\Delta P_{in}^2$ = transfer function of receiver in watts^{-1}
I_{mpi}	multi-path interference figure of merit, the noise factor contribution caused by multiple path interference integrated over all baseband frequencies (0 to infinity);
I_{pd}	photodetector current
λ	wavelength in vacuum
m	relative modulation amplitude (the ratio of RMS optical power modulation amplitude to average optical power)
$NF(f)$	(total) noise figure
$N_{rin,0}(f)$	(frequency-dependent) ESA noise contribution caused by the laser relative intensity noise, at calibration conditions
$N_{rin,1}$	(frequency-dependent) noise caused by the laser relative intensity noise (RIN), measured with ESA
$N_{shot,0}$	(frequency-independent) shot noise caused by the optical input power, at calibration conditions, measured with ESA
$N_{thermal}$	thermal noise level as measured with ESA (optical input port of receiver module closed);
$N_0(f)$	(frequency-dependent) noise power measured with ESA with input and output attenuator set to 0 dB, thermal noise level subtracted, without OA test device
$N_0'(f)$	(frequency-dependent) noise power measured with ESA with input attenuator set to 3 dB (default) and output attenuator set to 0 dB, thermal noise level subtracted, without OA test device
$N_1(f)$	frequency-dependent noise power, with OA inserted, thermal noise level subtracted, measured with ESA
P_{in}	time-averaged optical input power = T_{in} $P_{in,0}$ (with modulation on); optical power radiated from the end of the input jumper cable
$P_{in,0}$	time-averaged optical input power at 0 dB setting of input attenuator (with modulation on)
$\Delta P_{in,rms}$	RMS optical power amplitude
P_{out}	total optical power radiated from the output port of the OA, including the ASE

Documents
Document Sharing Hub
Full document details: IEC 61290-3-2 2008

r_0, $r_0(f)$	effective photodetector responsivity through output attenuator at 0 dB setting
$RIN_{source}(f)$	source relative intensity noise; generally, the square of the RMS optical power fluctuation divided by the (baseband) bandwidth and the square of the CW power
S_0	electrical power of the modulation signal at T_{in} = 1, measured with ESA, without OA inserted
S_1	electrical power of the modulation signal, with OA inserted, measured with ESA
T_{in}	transmission factor of input attenuator relative to transmission at 0 dB setting, expressed in linear form
T_{out}	transmission factor of output attenuator relative to transmission at 0 dB setting, expressed in linear form
T_x	voltage amplification between detector output and ESA input; this quantity usually depends on the baseband frequency
CW	continuous wave
DFB	distributed feedback laser
ESA	electrical spectrum analyzer
FWHM	full width at half maximum
MPI	multiple path interference
OA	optical fibre amplifier
RIN	relative intensity noise of the source, expressed in Hz^{-1}
RMS	root mean square

4 Apparatus

The scheme of a possible implementation of the measurement set-up is shown in Figure 1.

The test equipment listed below, with the required characteristics, is needed.

a) A source module with the following components

1) A laser source with a single-line spectrum, for example: a distributed feedback (DFB) laser diode. The laser source shall be sine-wave amplitude modulated with one single frequency that is sufficiently higher than the linewidth of the source. A modulation frequency at least 3 times higher than the linewidth is advisable. The relative modulation amplitude, m (that is, the ratio of root mean square, RMS, optical power modulation amplitude to average optical power) shall be sufficiently small to ensure operation in the linear regime. A value for m of 2 % to 10 %(‡) is considered adequate. Direct or external modulation can be used.

   An achievable average output power, $P_{in,\,0}$, of not less than 0 dBm is advisable, to be able to generate the desired OA saturation state.

   The linewidth FWHM (full width at half maximum) under modulation shall be between 20 MHz(‡) and 100 MHz(‡). This is considered the best range for accurate determination of the noise contribution from multiple path interference, because it closely reflects the typical linewidths of DFB lasers, the typical laser source used in conjunction with OAs. A linewidth of 20 MHz is adequate for a minimum spacing of 7,5 m between the OA internal reflection points. Using narrower linewidths will lead to the undesired situation that the OA internal reflections interfere in a coherent way and that substantially different noise figure results are obtained. A linewidth of more than 100 MHz will cause OA noise contributions at frequencies which are higher than the high end of the ESA bandwidth.

   The relative intensity noise (RIN) of the laser source shall be less than –150 dB/Hz(‡) within the frequency range of interest (for example, 10 MHz to 2 GHz).

Documents
Document Sharing Hub
Full document details: IEC 61290-3-2 2008

The spontaneous emission power, relative to the signal power, shall be less than –40 dB/nm(‡) in order to avoid large noise contributions from spontaneous-spontaneous mixing of the source spontaneous emission.

2) A built-in or external isolator, so that external reflections have no influence on the laser spectrum and on the laser relative intensity noise. The isolator shall have an optical isolation of better than 60 dB(‡). The reflectance at the isolator output port shall be less than –50 dB(‡).

3) An input attenuator with variable attenuation, >40 dB attenuation range, better than ±0,05 dB(‡) linearity and external/internal reflectances of less than –50 dB(‡). This attenuator serves as means of changing the source output power without changing its spectrum, relative intensity noise (RIN) or state of polarization. The purpose of this attenuator is to control the input power and to allow a distinction of shot noise from other noise sources during calibration.

NOTE Alternatively, a simpler attenuator with no linearity requirement can be used if the change of loss is measured with the electrical spectrum analyzer.

4) A polarization controller with the following capabilities: generation of all possible output polarization states from an arbitrary input polarization state, optical power dependence on output polarization state less than ±0,01 dB(‡), and reflectances less than –50 dB(‡).

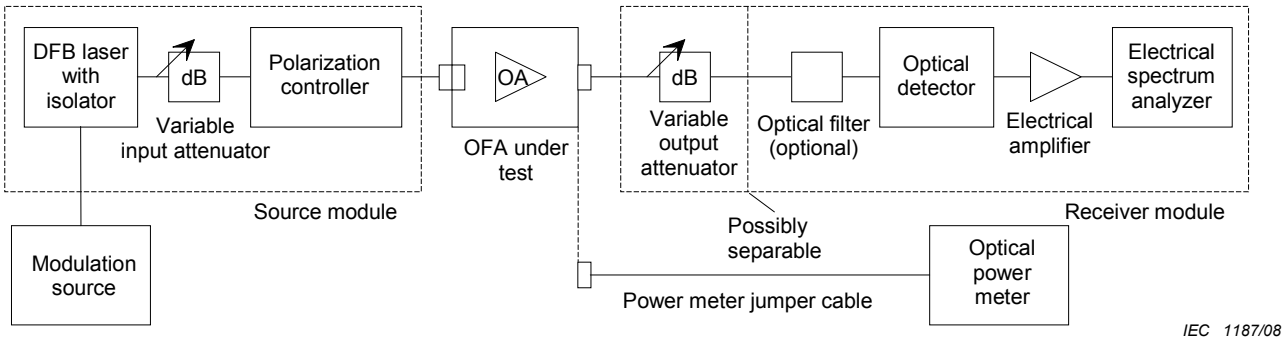

Figure 1 – Scheme of a measurement set-up

b) A modulation source (that is, a signal generator) capable of generating the frequency and amplitude stated above.

c) An optical power meter with the following capabilities:

– it shall be capable of measuring the total radiated power from the output connector (or bare fibre) of the source module. It shall have a measurement accuracy of better than ±0,2 dB, irrespective of the state of polarization, within the operational wavelength band of the OA. The minimum power level is defined by the source power at 0 dB attenuator setting. The highest power level is given by the OA output power at the highest input power;

– it is advisable to make the output port of the output attenuator accessible, because then the OA output power can alternatively be measured through the output attenuator, thereby reducing the need for high power measurement.

d) A receiver module with a noise equivalent power (in optical watts/hertz) not larger (‡) than the RIN-related noise at the output of the source module at the input attenuator 0 dB setting. The receiver module shall consist of the following components:

Documents
Document Sharing Hub
Full document details: IEC 61290-3-2 2008

1) an output attenuator with variable attenuation, with attenuation range greater than 40 dB, linearity better than ±0,05 dB(‡), peak-to-peak polarization dependence better than 0,05 dB(‡), essentially flat wavelength-response, external/internal reflectances of less than –50 dB(‡), power level capabilities up to the maximum OA output power. The purpose of this attenuator is to provide accurate attenuation before the detector input;
2) an O/E converter, preferably a combination of a photodetector with a reflectance of less than –30 dB(‡) and a peak-to-peak polarization dependence better than 0,05 dB(‡), and an electrical amplifier with high-impedance input (to achieve low thermal noise);
3) an electrical spectrum analyzer (ESA). It should have a frequency range in which any multiple path interference (MPI) contribution to the noise figure is decayed to insignificance. Usually, frequency ranges from 10 MHz to 2 GHz(‡) fulfill this requirement. The ESA noise floor should be lower than the noise floor at the output of the (electrical) amplifier when the source module is connected and the input attenuator is set to 0 dB attenuation (in this case, the amplifier noise floor contains noise from source RIN, detector shot noise and the electrical amplifier thermal noise).

e) Optical jumper cables with mode field diameters as close as possible to those of the fibres used as input and output ports of the OA.

f) Optical connectors compatible with those used as optical input ports of the OA test device, with a loss repeatability of better than ±0,1 dB. Their reflectance shall be less than –50 dB(‡). Alternatively, optical splicing can be used as a method for connecting the OA to the measurement set-up (this is considered the most accurate method).

g) Optionally, an optical filter to reduce/exclude the noise contribution from spontaneous-spontaneous mixing from the measurement results. The filter shall have the following properties: filter bandwidth sufficiently small to obtain the desired reduction of the spontaneous-spontaneous noise, input and output reflectances less than −50 dB(‡), peak-to-peak polarization dependence less than 0,05 dB(‡), stop-band attenuation greater than 30 dB.

5 Test specimen

The OA shall operate at nominal operating conditions. If the OA or the test apparatus is likely to cause optical interference problems in the set-up, optical isolators should be used to bracket the OA under test. This will minimize the signal instability and the measurement uncertainty.

The OA optical ports may be optical connectors or bare fibre pigtails.

Care should be taken in maintaining the state of polarization of the input light during measurement. Changes in the polarization state may result in changes of the optical input power and in changes in the noise due to multiple path interference. Therefore, it is necessary to adjust the input polarization state in order to maximize the noise figure.

6 Procedure

6.1 General remark

All signal and noise measurements with the electrical spectrum analyzer are in electrical watts. All noise measurement results are to be understood as a function of frequency and after subtraction of the (possibly frequency dependent) thermal noise (see 6.2, step i)).

Two alternative techniques are possible, namely the frequency-scanning technique and the selected-frequency technique. The frequency-scanning technique is advisable when the frequency-dependence of the noise produced by the OA is unknown or non-monotonic. The selected-frequency technique may be used when the total noise power $N_1(f)$ (with the OA inserted and excluding the thermal noise) either is essentially frequency independent (that is, when the noise contribution from multi-path interference is negligible) or decays monotonically

Documents
Document Sharing Hub