IEC 61290-4-3

Edition 2.0 2018-04

INTERNATIONAL STANDARD

NORME INTERNATIONALE

colour inside

Optical amplifiers – Test methods – Part 4-3: Power transient parameters – Single channel optical amplifiers in output power control

Amplificateurs optiques – Méthodes d'essai – Partie 4-3: Paramètres de puissance transitoire – Amplificateurs optiques monocanaux commandés par la puissance de sortie

IEC 61290-4-3:2018-04(en-fr)

Documents
Document Sharing Hub

Full document details: IEC 61290-4-3 2018

THIS PUBLICATION IS COPYRIGHT PROTECTED

Copyright © 2018 IEC, Geneva, Switzerland

All rights reserved. Unless otherwise specified, no part of this publication may be reproduced or utilized in any form or by any means, electronic or mechanical, including photocopying and microfilm, without permission in writing from either IEC or IEC's member National Committee in the country of the requester. If you have any questions about IEC copyright or have an enquiry about obtaining additional rights to this publication, please contact the address below or your local IEC member National Committee for further information.

Droits de reproduction réservés. Sauf indication contraire, aucune partie de cette publication ne peut être reproduite ni utilisée sous quelque forme que ce soit et par aucun procédé, électronique ou mécanique, y compris la photocopie et les microfilms, sans l'accord écrit de l'IEC ou du Comité national de l'IEC du pays du demandeur. Si vous avez des questions sur le copyright de l'IEC ou si vous désirez obtenir des droits supplémentaires sur cette publication, utilisez les coordonnées ci-après ou contactez le Comité national de l'IEC de votre pays de résidence.

IEC Central Office
3, rue de Varembé
CH-1211 Geneva 20
Switzerland

Tel.: +41 22 919 02 11
info@iec.ch
www.iec.ch

About the IEC
The International Electrotechnical Commission (IEC) is the leading global organization that prepares and publishes International Standards for all electrical, electronic and related technologies.

About IEC publications
The technical content of IEC publications is kept under constant review by the IEC. Please make sure that you have the latest edition, a corrigenda or an amendment might have been published.

IEC Catalogue - webstore.iec.ch/catalogue
The stand-alone application for consulting the entire bibliographical information on IEC International Standards, Technical Specifications, Technical Reports and other documents. Available for PC, Mac OS, Android Tablets and iPad.

IEC publications search - webstore.iec.ch/advsearchform
The advanced search enables to find IEC publications by a variety of criteria (reference number, text, technical committee,…). It also gives information on projects, replaced and withdrawn publications.

IEC Just Published - webstore.iec.ch/justpublished
Stay up to date on all new IEC publications. Just Published details all new publications released. Available online and also once a month by email.

Electropedia - www.electropedia.org
The world's leading online dictionary of electronic and electrical terms containing 21 000 terms and definitions in English and French, with equivalent terms in 16 additional languages. Also known as the International Electrotechnical Vocabulary (IEV) online.

IEC Glossary - std.iec.ch/glossary
67 000 electrotechnical terminology entries in English and French extracted from the Terms and Definitions clause of IEC publications issued since 2002. Some entries have been collected from earlier publications of IEC TC 37, 77, 86 and CISPR.

IEC Customer Service Centre - webstore.iec.ch/csc
If you wish to give us your feedback on this publication or need further assistance, please contact the Customer Service Centre: sales@iec.ch.

A propos de l'IEC
La Commission Electrotechnique Internationale (IEC) est la première organisation mondiale qui élabore et publie des Normes internationales pour tout ce qui a trait à l'électricité, à l'électronique et aux technologies apparentées.

A propos des publications IEC
Le contenu technique des publications IEC est constamment revu. Veuillez vous assurer que vous possédez l'édition la plus récente, un corrigendum ou amendement peut avoir été publié.

Catalogue IEC - webstore.iec.ch/catalogue
Application autonome pour consulter tous les renseignements bibliographiques sur les Normes internationales, Spécifications techniques, Rapports techniques et autres documents de l'IEC. Disponible pour PC, Mac OS, tablettes Android et iPad.

Recherche de publications IEC - webstore.iec.ch/advsearchform

La recherche avancée permet de trouver des publications IEC en utilisant différents critères (numéro de référence, texte, comité d'études,…). Elle donne aussi des informations sur les projets et les publications remplacées ou retirées.

IEC Just Published - webstore.iec.ch/justpublished

Restez informé sur les nouvelles publications IEC. Just Published détaille les nouvelles publications parues. Disponible en ligne et aussi une fois par mois par email.

Electropedia - www.electropedia.org

Le premier dictionnaire en ligne de termes électroniques et électriques. Il contient 21 000 termes et définitions en anglais et en français, ainsi que les termes équivalents dans 16 langues additionnelles. Egalement appelé Vocabulaire Electrotechnique International (IEV) en ligne.

Glossaire IEC - std.iec.ch/glossary
67 000 entrées terminologiques électrotechniques, en anglais et en français, extraites des articles Termes et Définitions des publications IEC parues depuis 2002. Plus certaines entrées antérieures extraites des publications des CE 37, 77, 86 et CISPR de l'IEC.

Service Clients - webstore.iec.ch/csc

Si vous désirez nous donner des commentaires sur cette publication ou si vous avez des questions contactez-nous: sales@iec.ch.

Documents
Document Sharing Hub

Full document details: IEC 61290-4-3 2018

IEC 61290-4-3

Edition 2.0 2018-04

INTERNATIONAL STANDARD

NORME INTERNATIONALE

colour inside

Optical amplifiers – Test methods – Part 4-3: Power transient parameters – Single channel optical amplifiers in output power control

Amplificateurs optiques – Méthodes d'essai – Partie 4-3: Paramètres de puissance transitoire – Amplificateurs optiques monocanaux commandés par la puissance de sortie

INTERNATIONAL ELECTROTECHNICAL COMMISSION

COMMISSION ELECTROTECHNIQUE INTERNATIONALE

ICS 33.180.30

ISBN 978-2-8322-5639-8

Warning! Make sure that you obtained this publication from an authorized distributor.
Attention! Veuillez vous assurer que vous avez obtenu cette publication via un distributeur agréé.

AVA Documents
Document Sharing Hub

® Registered trademark of the International Electrotechnical Commission
Marque déposée de la Commission Electrotechnique Internationale

Full document details: IEC 61290-4-3 2018

CONTENTS

FOREWORD 3
1 Scope 5
2 Normative references 5
3 Terms, definitions and abbreviated terms 6
3.1 Terms and definitions 6
3.2 Abbreviated terms 7
4 Apparatus 8
4.1 Test set-up 8
4.2 Characteristics of test equipment 8
5 Test sample 9
6 Procedure 9
6.1 Test preparation 9
6.2 Test 10
7 Calculations 10
8 Test results 11
8.1 Test setting conditions 11
8.2 Test data 12
Annex A (informative) Overview of power transient events in single channel EDFA 13
A.1 Background 13
A.2 Characteristic input power behaviour 13
A.3 Parameters for characterizing transient behaviour 16
Annex B (informative) Background on power transient phenomena in a single channel EDFA 17
B.1 Amplifier chains in optical networks 17
B.2 Typical optical amplifier design 17
B.3 Approaches to address detection errors 19
Annex C (informative) Slew rate effect on transient gain response 23
Bibliography 24

Figure 1 – Power transient test set-up 8
Figure 2 – OA output power transient response of a) input power increase and b) decrease 11
Figure A.1 – Example OA input power transient cases for a receiver application 14
Figure A.2 – Input power measurement parameters 15
Figure A.3 – OA output power transient response 16
Figure B.1 – Transient response to input power drop 21
Figure B.2 – Transient response to input power rise 22

Table 1 – Template for transient control measurement test conditions 10

Documents
Document Sharing Hub
Full document details: IEC 61290-4-3 2018

INTERNATIONAL ELECTROTECHNICAL COMMISSION

OPTICAL AMPLIFIERS – TEST METHODS –

Part 4-3: Power transient parameters – Single channel optical amplifiers in output power control

FOREWORD

1) The International Electrotechnical Commission (IEC) is a worldwide organization for standardization comprising all national electrotechnical committees (IEC National Committees). The object of IEC is to promote international co-operation on all questions concerning standardization in the electrical and electronic fields. To this end and in addition to other activities, IEC publishes International Standards, Technical Specifications, Technical Reports, Publicly Available Specifications (PAS) and Guides (hereafter referred to as "IEC Publication(s)"). Their preparation is entrusted to technical committees; any IEC National Committee interested in the subject dealt with may participate in this preparatory work. International, governmental and non-governmental organizations liaising with the IEC also participate in this preparation. IEC collaborates closely with the International Organization for Standardization (ISO) in accordance with conditions determined by agreement between the two organizations.
2) The formal decisions or agreements of IEC on technical matters express, as nearly as possible, an international consensus of opinion on the relevant subjects since each technical committee has representation from all interested IEC National Committees.
3) IEC Publications have the form of recommendations for international use and are accepted by IEC National Committees in that sense. While all reasonable efforts are made to ensure that the technical content of IEC Publications is accurate, IEC cannot be held responsible for the way in which they are used or for any misinterpretation by any end user.
4) In order to promote international uniformity, IEC National Committees undertake to apply IEC Publications transparently to the maximum extent possible in their national and regional publications. Any divergence between any IEC Publication and the corresponding national or regional publication shall be clearly indicated in the latter.
5) IEC itself does not provide any attestation of conformity. Independent certification bodies provide conformity assessment services and, in some areas, access to IEC marks of conformity. IEC is not responsible for any services carried out by independent certification bodies.
6) All users should ensure that they have the latest edition of this publication.
7) No liability shall attach to IEC or its directors, employees, servants or agents including individual experts and members of its technical committees and IEC National Committees for any personal injury, property damage or other damage of any nature whatsoever, whether direct or indirect, or for costs (including legal fees) and expenses arising out of the publication, use of, or reliance upon, this IEC Publication or any other IEC Publications.
8) Attention is drawn to the Normative references cited in this publication. Use of the referenced publications is indispensable for the correct application of this publication.
9) Attention is drawn to the possibility that some of the elements of this IEC Publication may be the subject of patent rights. IEC shall not be held responsible for identifying any or all such patent rights.

International Standard IEC 61290-4-3 has been prepared by subcommittee 86C: Fibre optic systems and active devices, of IEC technical committee 86: Fibre optics.

This second edition cancels and replaces the first edition published in 2015. This edition constitutes a technical revision.

This edition includes the following significant technical change with respect to the previous edition: alignment of the measure of amplified spontaneous emission (ASE) relative to signal power with the definition in IEC 61290-3-3.

Documents
Document Sharing Hub

Full document details: IEC 61290-4-3 2018

The text of this International Standard is based on the following documents:

FDIS	Report on voting
86C/1505/FDIS	86C/1512/RVD

Full information on the voting for the approval of this International Standard can be found in the report on voting indicated in the above table.

This document has been drafted in accordance with the ISO/IEC Directives, Part 2.

This International Standard is to be used in conjunction with IEC 61291-1:2012.

A list of all parts of the IEC 61290 series, published under the general title *Optical amplifiers – Test methods*, can be found on the IEC website.

The committee has decided that the contents of this document will remain unchanged until the stability date indicated on the IEC website under "http://webstore.iec.ch" in the data related to the specific document. At this date, the document will be

- reconfirmed,
- withdrawn,
- replaced by a revised edition, or
- amended.

IMPORTANT – The 'colour inside' logo on the cover page of this publication indicates that it contains colours which are considered to be useful for the correct understanding of its contents. Users should therefore print this document using a colour printer.

Documents
Document Sharing Hub

Full document details: IEC 61290-4-3 2018

OPTICAL AMPLIFIERS – TEST METHODS –

Part 4-3: Power transient parameters – Single channel optical amplifiers in output power control

1 Scope

This part of IEC 61290 applies to output power controlled optically amplified, elementary sub-systems. It applies to optical fibre amplifiers (OFAs) using active fibres containing rare-earth dopants, presently commercially available, as indicated in IEC 61291-1, as well as alternative optical amplifiers that can be used for single channel output power controlled operation, such as semiconductor optical amplifiers (SOAs).

The object of this document is to provide the general background for optical amplifiers (OAs) power transients and their measurements and to indicate those IEC standard test methods for accurate and reliable measurements of the following transient parameters:

a) transient power response;

b) transient power overcompensation response;

c) steady-state power offset;

d) transient power response time.

The stimulus and responses behaviours under consideration include the following:

1) channel power increase (step transient);

2) channel power reduction (inverse step transient);

3) channel power increase/reduction (pulse transient);

4) channel power reduction/increase (inverse pulse transient);

5) channel power increase/reduction/increase (lightning bolt transient);

6) channel power reduction/increase/reduction (inverse lightning bolt transient).

These parameters have been included to provide a complete description of the transient behaviour of an output power transient controlled OA. The test definitions defined here are applicable if the amplifier is an OFA or an alternative OA. However, the description in Annex A concentrates on the physical performance of an OFA and provides a detailed description of the behaviour of an OFA; it does not give a similar description of other OA types. Annex B provides a detailed description background of the dynamic phenomenon in output power controlled amplifiers under transient conditions and Annex C details the impact of speed of transient inputs.

2 Normative references

The following documents are referred to in the text in such a way that some or all of their content constitutes requirements of this document. For dated references, only the edition cited applies. For undated references, the latest edition of the referenced document (including any amendments) applies.

IEC 61291-1, *Optical amplifiers – Part 1: Generic specification*

Documents
Document Sharing Hub

Full document details: IEC 61290-4-3 2018

3 Terms, definitions and abbreviated terms

3.1 Terms and definitions

For the purposes of this document, the following terms and definitions apply.

ISO and IEC maintain terminological databases for use in standardization at the following addresses:

- IEC Electropedia: available at http://www.electropedia.org/
- ISO Online browsing platform: available at http://www.iso.org/obp

3.1.1
input signal
optical signal that is input to the OA

3.1.2
input power excursion
relative input power difference before, during and after the input power stimulus event that causes an OA transient power excursion

Note 1 to entry: Input power excursion is expressed in dB.

3.1.3
input power rise time
time it takes for the input optical signal to rise from 10 % to 90 % of the total difference between the initial and final signal levels during an increasing power excursion event

Note 1 to entry: See Figure A.2 a).

3.1.4
input power fall time
time it takes for the input optical signal to fall from 90 % to 10 % of the total difference between the initial and final signal levels during a decreasing power excursion event

Note 1 to entry: See Figure A.2 b).

3.1.5
slew rate
maximum rate of change of the input optical signal during a power excursion event

Note 1 to entry: See Annex C.

3.1.6
transient power response
maximum or minimum deviation (overshoot or undershoot) between the OA's target power and the observed power excursion induced by a change in an input channel power excursion

Note 1 to entry: Once the output power of an amplified channel deviates from its target power, the control electronics in the OA should attempt to compensate for the power difference or transient power response, bringing the OA output power back to its original target level.

Note 2 to entry: Transient power response is expressed in dB.

3.1.7
transient power response time
amount of time taken to restore the power of the OA to a stable power level close to the target power level

Note 1 to entry: This parameter is measured from the time when the stimulus event created the power fluctuation to the time at which the OA power response is stable and within specification.

AVA Documents
Document Sharing Hub

Full document details: IEC 61290-4-3 2018

3.1.8
transient power overcompensation response
maximum deviation between the amplifier's target output power and the power resulting from the control electronics' instability

Note 1 to entry: Transient power overcompensation response occurs after a power excursion, when an amplifier's control electronics attempts to bring the power back to the amplifier's target level. The control process is iterative, and control electronics may initially overcompensate for the power excursion until subsequently reaching the desired target power level.

Note 2 to entry: The transient power overcompensation response parameter is generally of lesser magnitude than the transient power response and has the opposite sign.

Note 3 to entry: Transient power overcompensation response is expressed in dB.

3.1.9
steady state power offset
difference between the final and initial output power of the OA, prior to the power excursion stimulus event

Note 1 to entry: Normally, the steady state power level following a power excursion differs from the OA power before the input power stimulus event. The transient controller attempts to overcome this offset using feedback.

Note 2 to entry: Steady state power offset is expressed in dB.

3.2 Abbreviated terms

AFF	ASE flattening filter
AGC	automatic gain controller
APC	automatic power control
ASE	amplified spontaneous emission
ASEP	amplified spontaneous emission power
BER	bit error ratio
DFB	distributed feedback (laser)
DWDM	dense wavelength division multiplexing
EDF	erbium-doped fibre
EDFA	erbium-doped fibre amplifier
GFF	gain flattening filter
NEM	network equipment manufacturers
NSP	network service providers
O/E	optical-to-electrical
OA	optical amplifier
OD	optical damage
OFA	optical fibre amplifier
OSA	optical spectrum analyser
OSNR	optical signal-to-noise ratio
PDs	photodiodes
PID	proportional integral-derivative
SOA	semiconductor optical amplifier
Sig_ASE	signal-to-ASE ratio
$SigP$	signal power
SOP	state of polarization
VOA	variable optical attenuator
WDM	wavelength division multiplexing

AVA Documents
Document Sharing Hub
Full document details: IEC 61290-4-3 2018

4 Apparatus

4.1 Test set-up

Figure 1 shows a generic set-up to characterise the transient response properties of output power controlled single channel OAs.

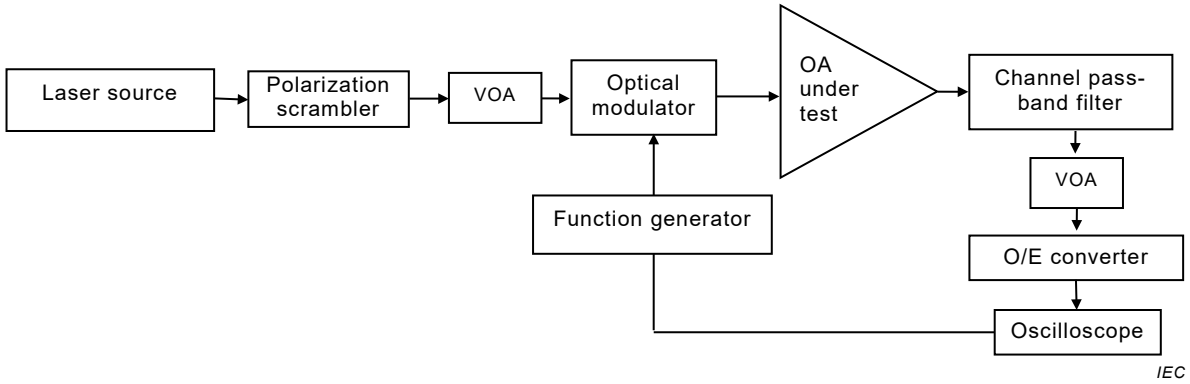

Figure 1 – Power transient test set-up

4.2 Characteristics of test equipment

The test equipment listed below is needed, with the required characteristics:

a) Laser source for supplying the OA input signal with the following characteristics.
   - ability to support the range of signal wavelengths for which the OA under test is to be tested. This could be provided for example by a tuneable laser, or a bank of distributed feedback (DFB) lasers;
   - an achievable average output power such that at the input to the OA under test, the power will be above the maximum specified input power of the OA, including loss of any subsequent test equipment between the laser source and OA under test.

b) Polarization scrambler to randomize the incoming polarization state of the laser source, or to control it to a defined state of polarization (SOP). The polarization scrambler is optional.

c) Variable optical attenuator (VOA) with a dynamic range sufficient to support the required range of surviving signal levels at which the OA under test is to be tested.

   NOTE If the output power of the laser source can be varied over the required dynamic range, then a VOA is not needed.

d) Optical modulator to modify the OA input signal to the defined power excursion with the following characteristics;
   - extinction ratio at rewrite without putting a number higher than the maximum drop level for which the OA under test is to be tested;
   - switching time fast enough to support the fastest slew rate for which the OA under test is to be tested.

e) Channel pass-band filter: an optical filter designed to distinguish the signal wavelength with the following characteristics. Note that the use of a channel pass-band filter is optional:
   - ability to support the range of signal wavelengths for which the OA under test is to be tested. This could be provided for example by a tuneable filter, or a series of discrete filters;
   - 1-dB passband of at least ±20 GHz centred around the signal wavelength;

Documents
Document Sharing Hub
Full document details: IEC 61290-4-3 2018

– more than 20 dB attenuation level below the minimum insertion loss across the entire specified transmission band of the OA under test, except within a range of ±100 GHz centred around the signal wavelength.

f) VOA before the optical-to-electrical (O/E) converter to ensure the maximum power is within the linear response range.

g) Optical-to-electrical (O/E) convertor to detect the filtered output of the OA under test with the following characteristics:

– a sufficiently wide optical and electrical bandwidth to support the fastest slew rate for which the OA is to be tested;

– a linear response within a ±5 dB range of all signal levels for which the OA under test is to be tested.

h) Oscilloscope to measure and capture the transient response of the optically filtered output of the OA under test, with a sufficiently wide electrical bandwidth to support the fastest slew rate for which the OA is to be tested.

i) Function generator to generate the input power transient waveforms to drive the optical modulator, with electrical pulse width short enough and electrical slew rate high enough to support the fastest slew rate for which the OA under test is to be tested.

5 Test sample

The OA shall operate under nominal operating conditions. If the OA is likely to cause laser oscillations due to unwanted reflections, optical isolators should be used to isolate the OA under test. This will minimize signal instability.

6 Procedure

6.1 Test preparation

In the set-up shown in Figure 1, the input optical signal power injected into the amplifier being tested is generated from a suitable laser source. The optical power is passed through an optional polarization scrambler to allow randomization or control of the signal polarization state and is subsequently adjusted with a VOA to the desired optical input power levels. The signal then passes through an optical modulator driven by a function generator that provides the desired input power test waveform to stimulate the transient input power excursions. The signal is then injected into the amplifier being tested. A channel pass-band filter (such as a tuneable optical filter, fixed optical filter or similar component) may be used to select only the relevant channel wavelength under test, followed by an O/E converter and an oscilloscope at the output of the amplifier. The output channel selected by the optional channel pass-band filter including its transient response is monitored with the O/E converter and oscilloscope. Waveforms similar to those shown in Figure A.3 are captured via the oscilloscope for subsequent computer processing.

Prior to measurement of the transient response, the input power waveform trace shall be recorded. Use the set-up of Figure 1 without the OFA under test. The input optical connector from the optical modulator is connected to the channel pass-band filter.

For this test, to stimulate a power excursion at the input of the OA under test, the source laser power at the OA input is set at some typical power level. The function generator waveform is chosen to increase or decrease the input power to the OA under test with power excursions and slew rate relevant to the defined test condition. For example, for a typical number in the case of an optical receiver, the input power to the OA could be increased by 7 dB in a timeframe of 50 μs and then held at this power value to simulate a power increase transient power response (step transient) condition as shown in Figure A.1 a). For alternative transient control measurements, the signal generator waveform is controlled appropriately, and the VOA is adjusted accordingly.

Documents
Document Sharing Hub
Full document details: IEC 61290-4-3 2018

6.2 Test

Several sequential transient control measurements can be performed according to the OA's specified operating conditions. Examples of power excursion scenarios are shown in Table 1. These measurements are typically performed over a broad range of input power levels.

Table 1 – Template for transient control measurement test conditions

Scenario	Power excursion dB	Slew rate µs
Input power step transient increase/reduction	3, 7	500, 200, 50
Input power pulse transient	3, 7	500, 200, 50
Input power lightning bolt transient	± 3, ± 7	500, 200, 50

7 Calculations

Transient parameters can be calculated by processing amplifier output power transient waveforms shown in Figure 2 a) and b), using the following criteria:

– transient power response (dB) = B – A;
– transient power overcompensation response (dB) = G – A;
– steady state power offset (dB) = E – A;
– transient power response time (µs) = D – C.

Documents
Document Sharing Hub
Full document details: IEC 61290-4-3 2018

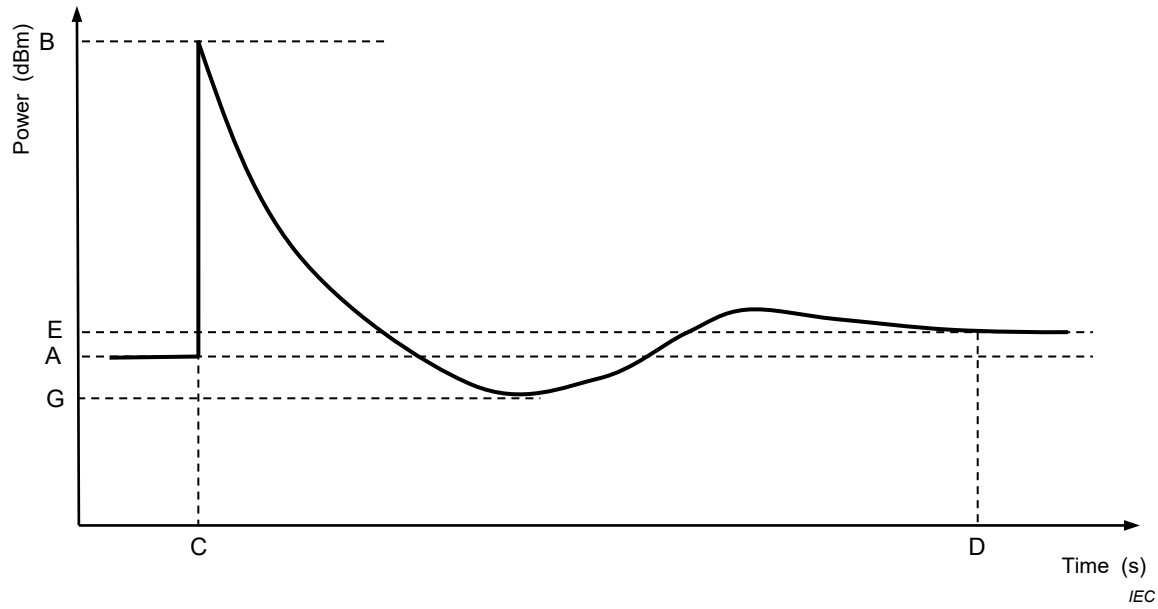

a) Channel input power increase

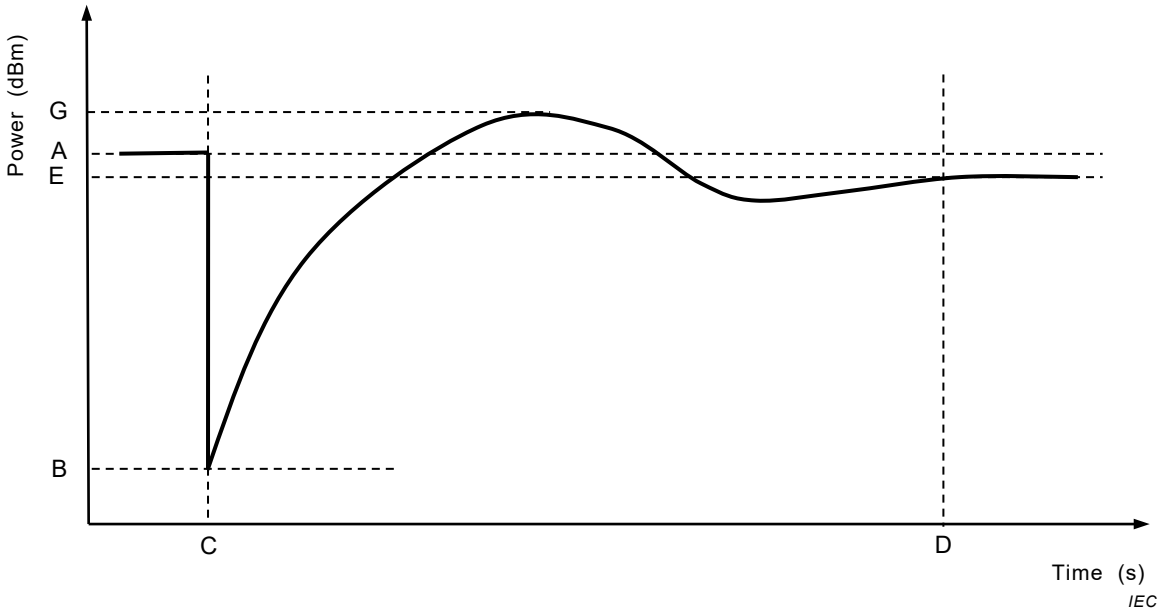

b) Channel input power decrease

Figure 2 – OA output power transient response of a) input power increase and b) decrease

8 Test results

8.1 Test setting conditions

The following test setting conditions shall be recorded:

a) arrangement of the test set-up;

b) details (make and model) of each piece of test equipment;

c) set-up condition of each piece of test equipment (e.g. operating speed of polarization scrambler, resolution bandwidth of optical spectrum analyzer (OSA));

d) mounting method of test sample;

e) ambient conditions for the test sample;

f) input optical wavelength λ_{in}.

Documents
Document Sharing Hub
Full document details: IEC 61290-4-3 2018

8.2 Test data

The following test data shall be recorded:

a) input optical power, P_{in} trace;
b) output optical power P_{out} trace;
c) signal-to-ASE ratio (Sig_ASE) at operating condition before and after excursion;
d) OFA laser pump power before and after excursion;
e) OA reported input power before and after input excursion (where available);
f) OA reported output power before and after input excursion;
g) OA reported internal temperature (where available);
h) measurement accuracy of each piece of test equipment;
i) temperature of test sample;
j) transient power response;
k) transient power overcompensation;
l) steady state power offset;
m) transient power response time.

Documents
Document Sharing Hub

Full document details: IEC 61290-4-3 2018

Annex A
(informative)

Overview of power transient events in single channel EDFA

A.1 Background

The input signal to a terminal OFA is normally a single channel erbium-doped fibre amplifier (EDFA) with a wide dynamic range as a result of channel power excursions throughout the network. The input signal will accumulate fast power variations, which are caused by concatenation of transient overshoot/undershoot excursions from the preceding chain of imperfect EDFA that transport channels. Those well-known gain transients arise as a result of add/drop events throughout the network, even though each EDFA is operated in constant gain mode with state-of-the-art gain transient suppression (typically, less than ±1 dB gain overshoot/undershoot from each EDFA). The temporal steepness and over/undershoot magnitude of those transients will accumulate with the number of EDFAs passed, and eventually a transient event with considerable power variations will arrive at the input of the terminal EDFA. The shape of this single-channel power transient event is directly dependent on the transient output power shape of the preceding inline EDFAs.

A.2 Characteristic input power behaviour

The characteristic input power behaviour of a single channel terminal OFA is shown in Figure A.1 a), b) and c), which is a consequence of add/drop events in the preceding amplifier chain. The figure specifically represents time dependence of the input power changes with example timings. The step, pulse and lightning bolt transient power response, and power offset response are particularly critical to carriers and network equipment manufacturers (NEM), given that the terminal OA is immediately followed by a channel receiver. A properly designed OA will have small values for these transient parameters.

Specific measurement parameters of the input power changes are detailed in Figure A.2 with reference to the lightning bolt scenario.

Documents
Document Sharing Hub

Full document details: IEC 61290-4-3 2018

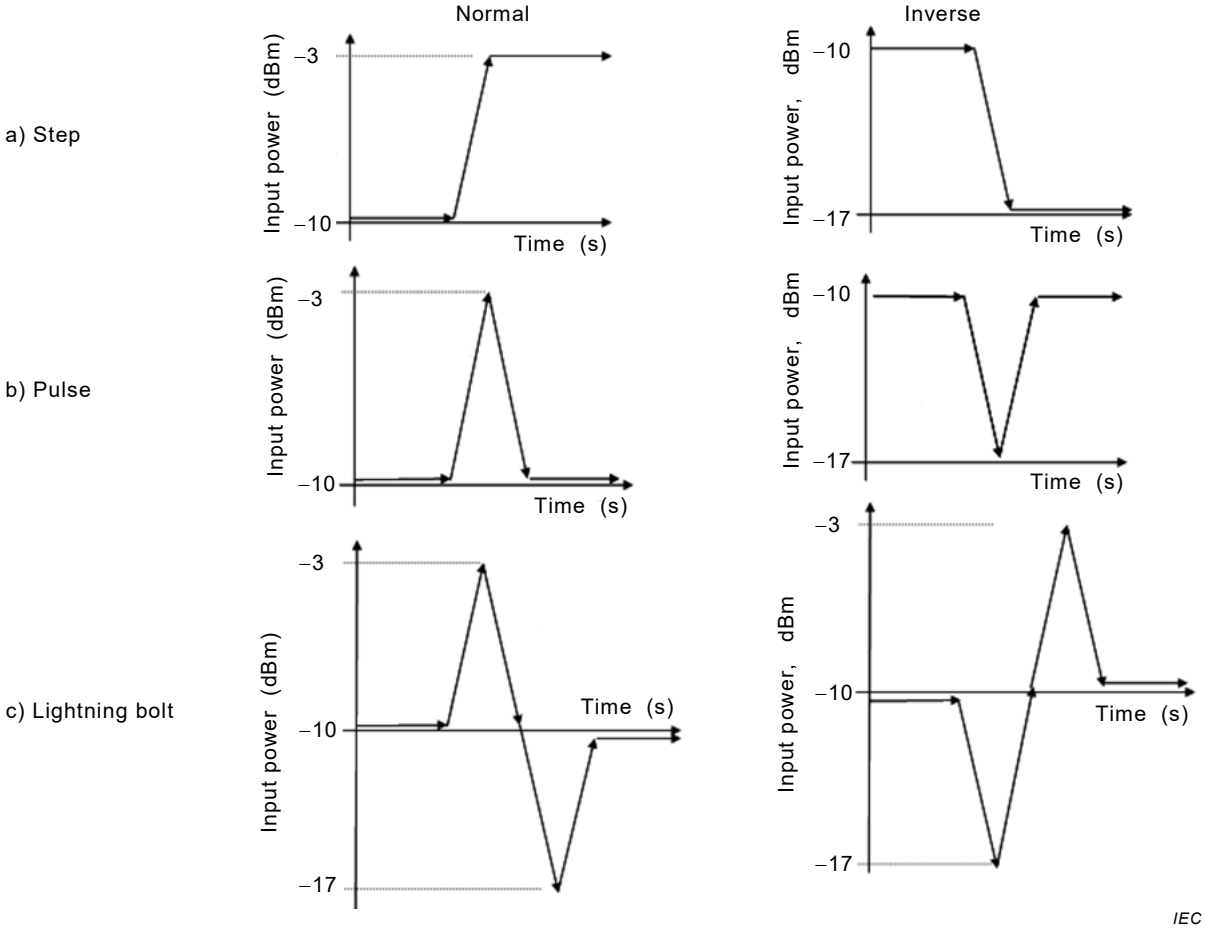

NOTE As an example of receivers, these are example numbers.

Figure A.1 – Example OA input power transient cases for a receiver application

Documents
Document Sharing Hub
Full document details: IEC 61290-4-3 2018

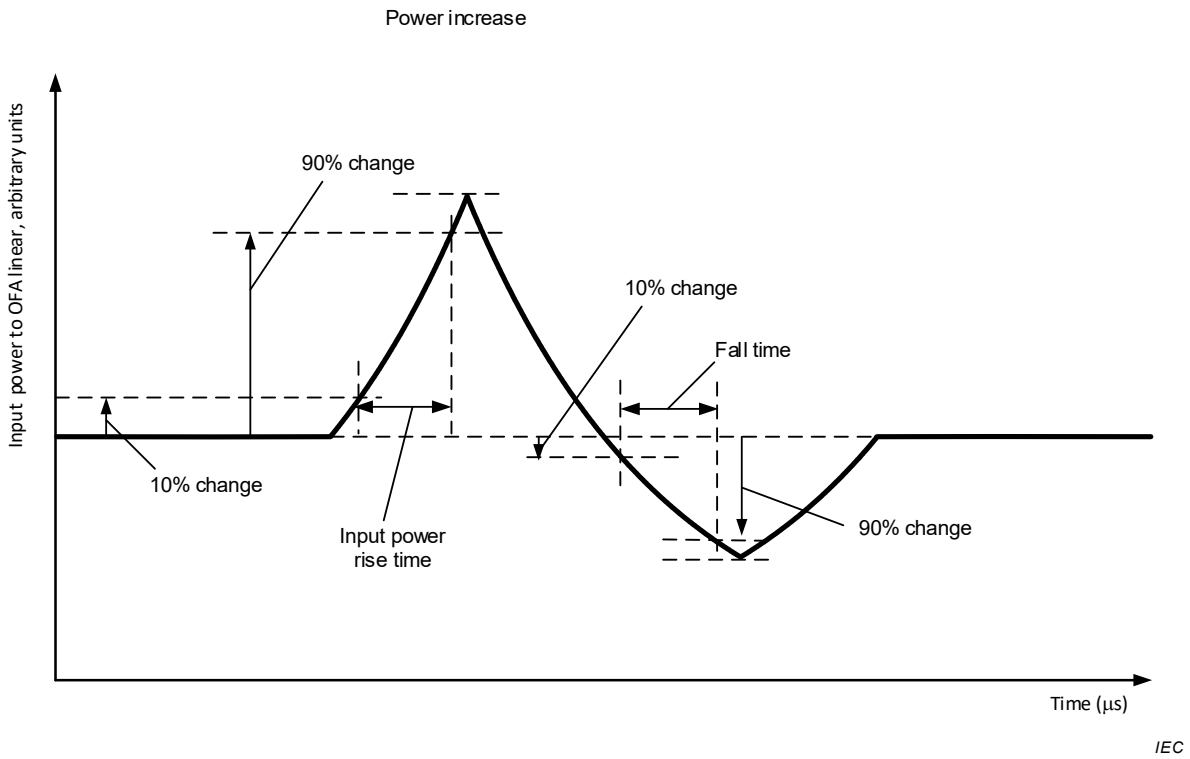

a) Input power increase

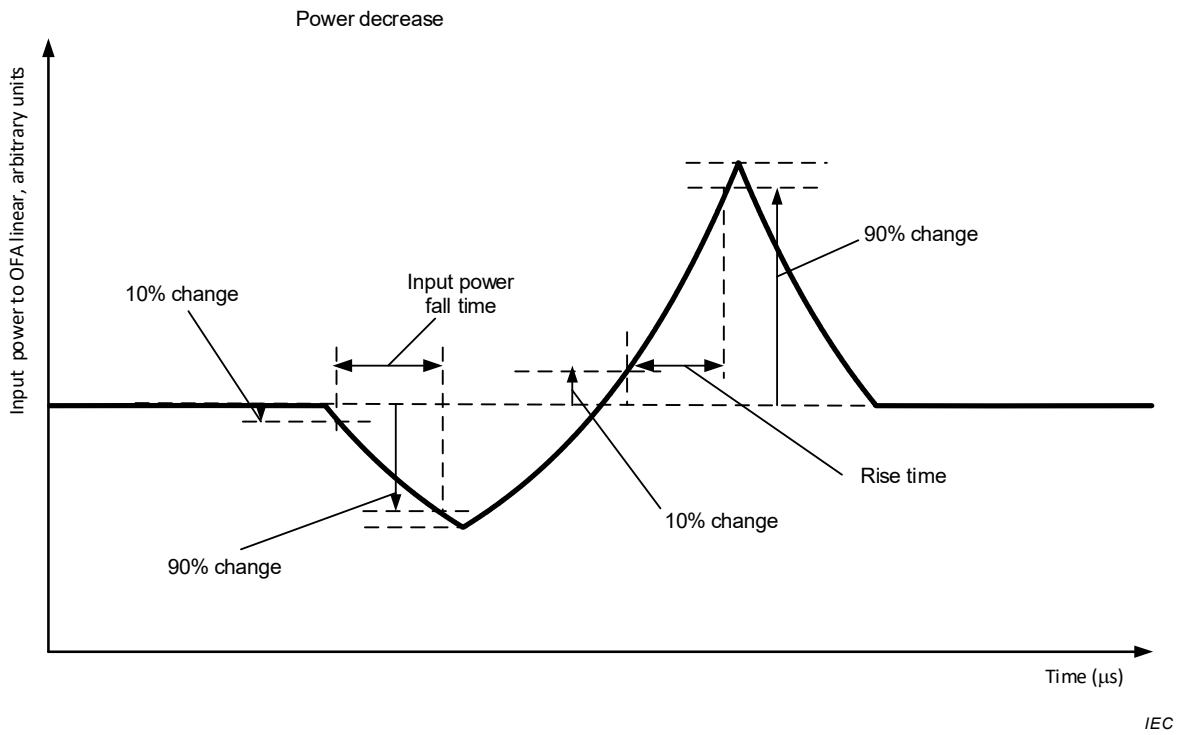

b) Input power decrease

Figure A.2 – Input power measurement parameters

It is important that a single channel OA placed next to a receiver is operated in automatic power control (APC) mode in order to suppress these input power transient excursions. This is referred to as output power transient controlled operation. Moderate transient power excursions incident on the receiver are manageable, depending on the receiver dynamic range and the bandwidth of the receiver AGC. However, excessive optical powers at the receiver either can result in data misreadings giving unwanted bit errors or can permanently damage the receiver.

Documents
Document Sharing Hub
Full document details: IEC 61290-4-3 2018