IEC 61300-2-10

Edition 3.0 2021-03
REDLINE VERSION

INTERNATIONAL STANDARD

colour inside

Fibre optic interconnecting devices and passive components – Basic test and measurement procedures –
Part 2-10: Tests – Crush and load resistance

IEC 61300-2-10:2021-03 RLV(en)

Documents
Document Sharing Hub

Full document details: IEC 61300-2-10 2021 RLV

THIS PUBLICATION IS COPYRIGHT PROTECTED
Copyright © 2021 IEC, Geneva, Switzerland

All rights reserved. Unless otherwise specified, no part of this publication may be reproduced or utilized in any form or by any means, electronic or mechanical, including photocopying and microfilm, without permission in writing from either IEC or IEC's member National Committee in the country of the requester. If you have any questions about IEC copyright or have an enquiry about obtaining additional rights to this publication, please contact the address below or your local IEC member National Committee for further information.

IEC Central Office
3, rue de Varembé
CH-1211 Geneva 20
Switzerland

Tel.: +41 22 919 02 11
info@iec.ch
www.iec.ch

About the IEC
The International Electrotechnical Commission (IEC) is the leading global organization that prepares and publishes International Standards for all electrical, electronic and related technologies.

About IEC publications
The technical content of IEC publications is kept under constant review by the IEC. Please make sure that you have the latest edition, a corrigendum or an amendment might have been published.

IEC publications search - webstore.iec.ch/advsearchform
The advanced search enables to find IEC publications by a variety of criteria (reference number, text, technical committee, …). It also gives information on projects, replaced and withdrawn publications.

IEC Just Published - webstore.iec.ch/justpublished
Stay up to date on all new IEC publications. Just Published details all new publications released. Available online and once a month by email.

IEC Customer Service Centre - webstore.iec.ch/csc
If you wish to give us your feedback on this publication or need further assistance, please contact the Customer Service Centre: sales@iec.ch.

IEC online collection - oc.iec.ch
Discover our powerful search engine and read freely all the publications previews. With a subscription you will always have access to up to date content tailored to your needs.

Electropedia - www.electropedia.org
The world's leading online dictionary on electrotechnology, containing more than 22 000 terminological entries in English and French, with equivalent terms in 18 additional languages. Also known as the International Electrotechnical Vocabulary (IEV) online.

Documents
Document Sharing Hub

Full document details: IEC 61300-2-10 2021 RLV

IEC 61300-2-10

Edition 3.0 2021-03
REDLINE VERSION

INTERNATIONAL STANDARD

colour inside

Fibre optic interconnecting devices and passive components – Basic test and measurement procedures –
Part 2-10: Tests – Crush and load resistance

INTERNATIONAL
ELECTROTECHNICAL
COMMISSION

ICS 33.180.20

ISBN 978-2-8322-9532-8

Warning! Make sure that you obtained this publication from an authorized distributor.

® Registered trademark of the International Electrotechnical Commission

Documents
Document Sharing Hub

Full document details: IEC 61300-2-10 2021 RLV

CONTENTS

FOREWORD 3
1 Scope 5
2 Normative references 5
3 Terms and definitions 5
4 General description 6
5 Apparatus 6
5.1 General 6
5.2 Plate or ground 6
5.3 Pad 6
5.4 Force generator 6
5.5 Gauge 6
5.6 Temperature chamber 6
6 Procedure 11
6.1 DUT preparation 11
6.2 Pre-conditioning 11
6.3 Initial examination and measurements 11
6.4 Device mounting 11
6.5 Conditioning 11
6.6 Recovery 11
6.7 Final examinations and measurements 11
7 Severity 12
8 Details to be specified 12

Figure 1 – Crush Apparatus 7
Figure 2 – Apparatus for an evenly distributed load applied to the top surface of a street cabinet – Front view 8
Figure 3 – Apparatus for an evenly distributed load applied to the top surface of a street cabinet – Top view 9
Figure 4 – Apparatus for load applied to a street cabinet door – Front view 10
Figure 5 – Apparatus for load applied to a street cabinet door – Top view 10

Table 1 – Severities 12

Documents
Document Sharing Hub

Full document details: IEC 61300-2-10 2021 RLV

INTERNATIONAL ELECTROTECHNICAL COMMISSION

FIBRE OPTIC INTERCONNECTING DEVICES AND PASSIVE COMPONENTS – BASIC TEST AND MEASUREMENT PROCEDURES –

Part 2-10: Tests – Crush and load resistance

FOREWORD

1) The International Electrotechnical Commission (IEC) is a worldwide organization for standardization comprising all national electrotechnical committees (IEC National Committees). The object of IEC is to promote international co-operation on all questions concerning standardization in the electrical and electronic fields. To this end and in addition to other activities, IEC publishes International Standards, Technical Specifications, Technical Reports, Publicly Available Specifications (PAS) and Guides (hereafter referred to as "IEC Publication(s)"). Their preparation is entrusted to technical committees; any IEC National Committee interested in the subject dealt with may participate in this preparatory work. International, governmental and non-governmental organizations liaising with the IEC also participate in this preparation. IEC collaborates closely with the International Organization for Standardization (ISO) in accordance with conditions determined by agreement between the two organizations.
2) The formal decisions or agreements of IEC on technical matters express, as nearly as possible, an international consensus of opinion on the relevant subjects since each technical committee has representation from all interested IEC National Committees.
3) IEC Publications have the form of recommendations for international use and are accepted by IEC National Committees in that sense. While all reasonable efforts are made to ensure that the technical content of IEC Publications is accurate, IEC cannot be held responsible for the way in which they are used or for any misinterpretation by any end user.
4) In order to promote international uniformity, IEC National Committees undertake to apply IEC Publications transparently to the maximum extent possible in their national and regional publications. Any divergence between any IEC Publication and the corresponding national or regional publication shall be clearly indicated in the latter.
5) IEC itself does not provide any attestation of conformity. Independent certification bodies provide conformity assessment services and, in some areas, access to IEC marks of conformity. IEC is not responsible for any services carried out by independent certification bodies.
6) All users should ensure that they have the latest edition of this publication.
7) No liability shall attach to IEC or its directors, employees, servants or agents including individual experts and members of its technical committees and IEC National Committees for any personal injury, property damage or other damage of any nature whatsoever, whether direct or indirect, or for costs (including legal fees) and expenses arising out of the publication, use of, or reliance upon, this IEC Publication or any other IEC Publications.
8) Attention is drawn to the Normative references cited in this publication. Use of the referenced publications is indispensable for the correct application of this publication.
9) Attention is drawn to the possibility that some of the elements of this IEC Publication may be the subject of patent rights. IEC shall not be held responsible for identifying any or all such patent rights.

This redline version of the official IEC Standard allows the user to identify the changes made to the previous edition IEC 61300-2-10:2012. A vertical bar appears in the margin wherever a change has been made. Additions are in green text, deletions are in strikethrough red text.

Documents
Document Sharing Hub

Full document details: IEC 61300-2-10 2021 RLV

IEC 61300-2-10 has been prepared by subcommittee 86B: Fibre optic interconnecting devices and passive components, of IEC technical committee 86: Fibre optics. It is an International Standard.

This third edition cancels and replaces the second edition published in 2012.

This edition includes the following significant technical changes with respect to the previous edition:

a) addition of testing an evenly distributed static load applied on the top surface of a street cabinet;
b) addition of testing a static load applied to a street cabinet door;
c) addition of descriptions to perform the test at a specified temperature other as specified in the standard atmospheric conditions and addition of test temperature(s) in Table 1;
d) update of the severities according to IEC 61753-1:2018.

The text of this International Standard is based on the following documents:

FDIS	Report on voting
86B/4405/FDIS	86B/4435/RVD

Full information on the voting for its approval can be found in the report on voting indicated in the above table.

The language used for the development of this International Standard is English.

This document was drafted in accordance with ISO/IEC Directives, Part 2, and developed in accordance with ISO/IEC Directives, Part 1 and ISO/IEC Directives, IEC Supplement, available at www.iec.ch/members_experts/refdocs. The main document types developed by IEC are described in greater detail at www.iec.ch/standardsdev/publications.

The committee has decided that the contents of this document will remain unchanged until the stability date indicated on the IEC website under "http://webstore.iec.ch" in the data related to the specific document. At this date, the document will be

- reconfirmed,
- withdrawn,
- replaced by a revised edition, or
- amended.

IMPORTANT – The 'colour inside' logo on the cover page of this publication indicates that it contains colours which are considered to be useful for the correct understanding of its contents. Users should therefore print this document using a colour printer.

Documents
Document Sharing Hub

Full document details: IEC 61300-2-10 2021 RLV

FIBRE OPTIC INTERCONNECTING DEVICES AND PASSIVE COMPONENTS – BASIC TEST AND MEASUREMENT PROCEDURES –

Part 2-10: Tests – Crush and load resistance

1 Scope

This part of IEC 61300 evaluates the effect of loads which ~~might~~ is possible to occur when fibre optic devices are exposed to critical situations such as being stepped on ~~or~~, being run over by vehicle tyres, when an evenly-distributed static load is applied to the top surface of a street cabinet or when a load is applied to a street cabinet's open door.

2 Normative references

The following documents are referred to in the text in such a way that some or all of their content constitutes requirements of this document. For dated references, only the edition cited applies. For undated references, the latest edition of the referenced document (including any amendments) applies.

IEC 61300-1, *Fibre optic interconnecting devices and passive components – Basic test and measurement procedures – Part 1: General and guidance*

IEC 61300-2-38, *Fibre optic interconnecting devices and passive components – Basic test and measurement procedures – Part 2-38: Tests – Sealing for pressurized fibre optic closures*

IEC 61300-3-1, *Fibre optic interconnecting devices and passive components – Basic test and measurement procedures – Part 3-1: Examinations and measurements – Visual examination*

IEC 61300-3-4, *Fibre optic interconnecting devices and passive components – Basic test and measurement procedures – Part 3-4: Examinations and measurements – Attenuation*

IEC 61300-3-6, *Fibre optic interconnecting devices and passive components – Basic test and measurement procedures – Part 3-6: Examinations and measurements – Return loss*

IEC 61753-1, *Fibre optic interconnecting devices and passive components – Performance standard – Part 1: General and guidance*

3 Terms and definitions

No terms and definitions are listed in this document.

ISO and IEC maintain terminological databases for use in standardization at the following addresses:

- IEC Electropedia: available at http://www.electropedia.org/
- ISO Online browsing platform: available at http://www.iso.org/obp

Documents
Document Sharing Hub

Full document details: IEC 61300-2-10 2021 RLV

4 General description

The device under test (DUT) is exposed to a static compressive load which is applied by a pad.

5 Apparatus

5.1 General

~~The apparatus consists of the following elements (Figure 1).~~

Depending on the DUT type, the apparatus consists of:

– for connectors, passive components, hardened connectors and closures (see Figure 1);
– for an evenly distributed static load applied to the top surface of a street cabinet (see Figure 2 and Figure 3);
– for a static load applied to a street cabinet door (see Figure 4 and Figure 5). The force shall be applied on top of an open door at the point which creates the highest moment on the hinge of the door.

5.2 Plate or ground

~~A 10 mm thick steel plate large enough for the whole DUT or as specified in the relevant specification. The plate is place on a non yielding surface. The plate has rounded edges.~~

For the crush apparatus shown in Figure 1, a minimum 10 mm thick plate using steel or material with comparable hardness, large enough for the whole DUT, or as specified in the relevant specification, is required. The plate is placed on a non-yielding surface. The plate has rounded edges.

For the apparatus for an evenly distributed static load applied to the top surface of a street cabinet shown in Figure 2 and Figure 3 and for a static load applied to a street cabinet door shown in Figure 4 and Figure 5, the street cabinet shall be fixed securely to firm ground.

5.3 Pad

~~A 10 mm thick steel pad, size as Table 1, or as specified in the relevant specification, bonded to a non-yielding plate. The pad has rounded edges.~~

A pad with a minimum thickness of 10 mm, made of steel or a material with comparable hardness, and with rounded edges fixed to a non-yielding plate is required. The pad shall have a diameter of 5,6 cm (equals to a surface of 25 cm^2) and contacts the DUT with its flat circular surface, except for the load test with an evenly distributed static load applied to the top surface of a street cabinet.

5.4 Force generator

The force generator may be any device or apparatus capable of smoothly applying the specified load at the specified rate.

5.5 Gauge

The gauge shall be a suitable instrument for measuring the load applied to the DUT.

5.6 Temperature chamber

If the test has to be performed at another temperature than ambient, then a temperature chamber of appropriate size and a temperature sensing device shall be used. The

AVA Documents
Document Sharing Hub

temperature chamber shall be able to accommodate the DUT, the pad and the force generator, and maintain the specified temperature within ± 2 °C.

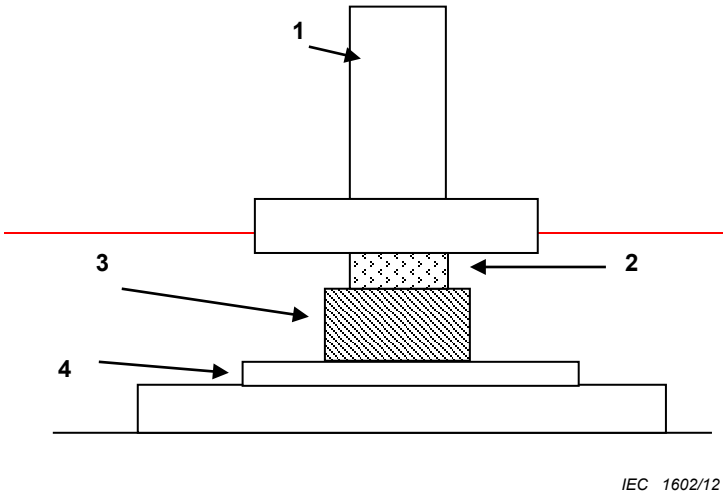

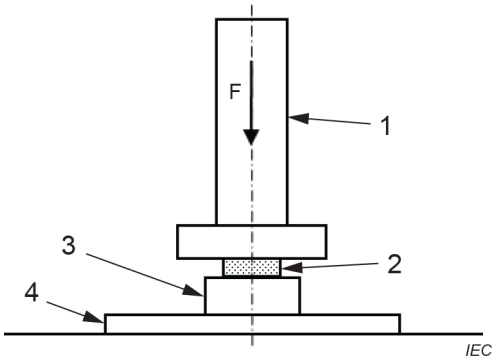

Key

1 force generator and gauge

2 pad

3 device under test

4 plate

F direction of force

Figure 1 – Crush Apparatus

Documents
Document Sharing Hub

Full document details: IEC 61300-2-10 2021 RLV

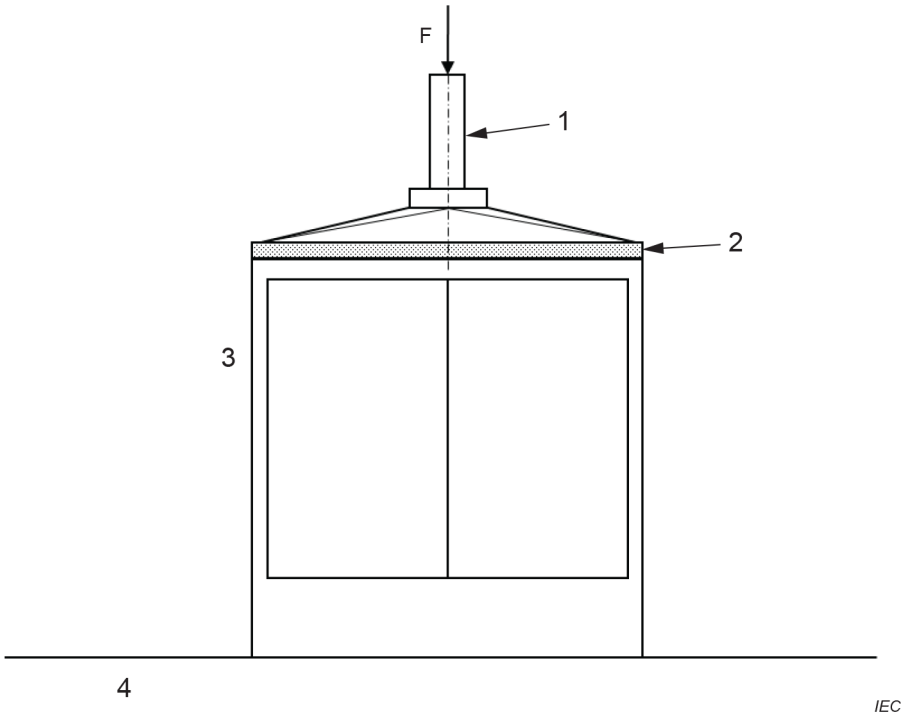

Key

1 force generator and gauge

2 pad

3 device under test (example of a street cabinet with two doors)

4 ground

F direction of force

Figure 2 – Apparatus for an evenly distributed load applied to the top surface of a street cabinet – Front view

Documents
Document Sharing Hub
Full document details: IEC 61300-2-10 2021 RLV

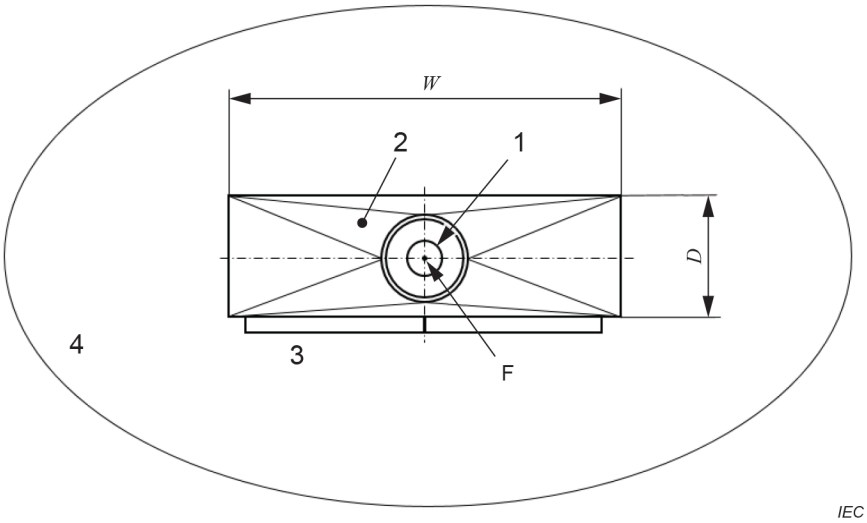

Key

1 force generator and gauge
2 pad
3 device under test (example of a street cabinet with two doors)
4 ground
F axis of force
D depth (example of a street cabinet)
W width (example of a street cabinet)

Figure 3 – Apparatus for an evenly distributed load applied to the top surface of a street cabinet – Top view

Documents
Document Sharing Hub
Full document details: IEC 61300-2-10 2021 RLV

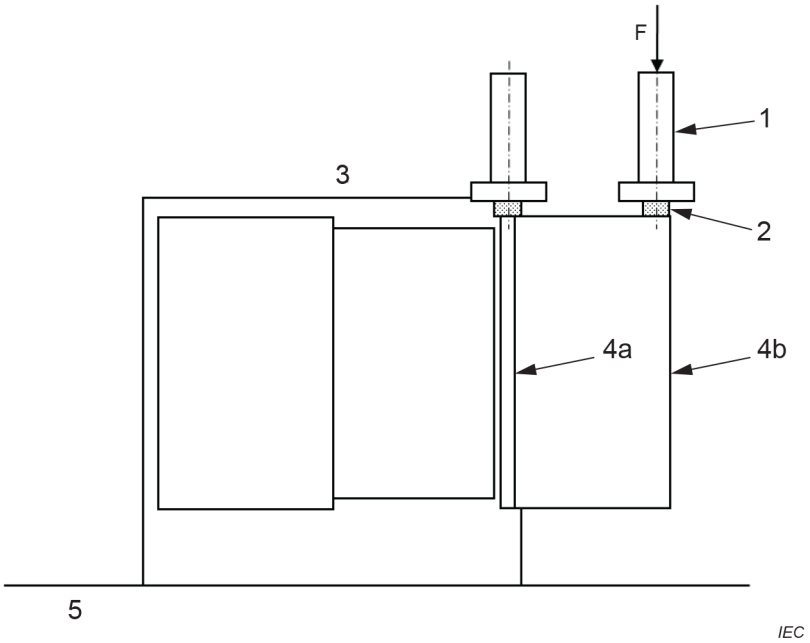

Key

1 force generator and gauge

2 pad

3 device under test (example of a street cabinet with two doors)

4 open door of device under test (4a – 90° open, or 4b – maximum opening in normal use or at 180° if no locking position)

5 ground

F direction of force

Figure 4 – Apparatus for load applied to a street cabinet door – Front view

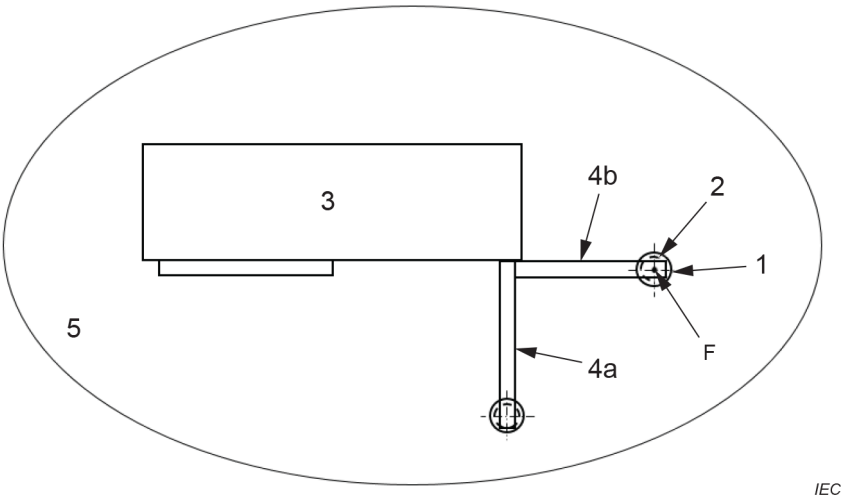

Key

1 force generator and gauge

2 pad

3 device under test (example of a street cabinet with two doors)

4 open door of device under test (4a – 90° open, or 4b – maximum opening in normal use or at 180° if no locking position)

5 ground

F direction of force

Figure 5 – Apparatus for load applied to a street cabinet door – Top view

AVA Documents
Document Sharing Hub
Full document details: IEC 61300-2-10 2021 RLV