IEC 61300-2-14

Edition 4.0 2021-02
REDLINE VERSION

INTERNATIONAL STANDARD

colour inside

Fibre optic interconnecting devices and passive components – Basic test and measurement procedures –
Part 2-14: Tests – High optical power

IEC 61300-2-14:2021-02 RLV(en)

Documents
Document Sharing Hub

Full document details: IEC 61300-2-14 2021 RLV

THIS PUBLICATION IS COPYRIGHT PROTECTED
Copyright © 2021 IEC, Geneva, Switzerland

All rights reserved. Unless otherwise specified, no part of this publication may be reproduced or utilized in any form or by any means, electronic or mechanical, including photocopying and microfilm, without permission in writing from either IEC or IEC's member National Committee in the country of the requester. If you have any questions about IEC copyright or have an enquiry about obtaining additional rights to this publication, please contact the address below or your local IEC member National Committee for further information.

IEC Central Office
3, rue de Varembé
CH-1211 Geneva 20
Switzerland

Tel.: +41 22 919 02 11
info@iec.ch
www.iec.ch

About the IEC
The International Electrotechnical Commission (IEC) is the leading global organization that prepares and publishes International Standards for all electrical, electronic and related technologies.

About IEC publications
The technical content of IEC publications is kept under constant review by the IEC. Please make sure that you have the latest edition, a corrigendum or an amendment might have been published.

IEC publications search - webstore.iec.ch/advsearchform
The advanced search enables to find IEC publications by a variety of criteria (reference number, text, technical committee, …). It also gives information on projects, replaced and withdrawn publications.

IEC Just Published - webstore.iec.ch/justpublished
Stay up to date on all new IEC publications. Just Published details all new publications released. Available online and once a month by email.

IEC Customer Service Centre - webstore.iec.ch/csc
If you wish to give us your feedback on this publication or need further assistance, please contact the Customer Service Centre: sales@iec.ch.

IEC online collection - oc.iec.ch
Discover our powerful search engine and read freely all the publications previews. With a subscription you will always have access to up to date content tailored to your needs.

Electropedia - www.electropedia.org
The world's leading online dictionary on electrotechnology, containing more than 22 000 terminological entries in English and French, with equivalent terms in 18 additional languages. Also known as the International Electrotechnical Vocabulary (IEV) online.

Documents
Document Sharing Hub

Full document details: IEC 61300-2-14 2021 RLV

IEC 61300-2-14

Edition 4.0 2021-02
REDLINE VERSION

INTERNATIONAL STANDARD

colour inside

Fibre optic interconnecting devices and passive components – Basic test and measurement procedures –
Part 2-14: Tests – High optical power

INTERNATIONAL
ELECTROTECHNICAL
COMMISSION

ICS 33.180.20

ISBN 978-2-8322-9433-8

Warning! Make sure that you obtained this publication from an authorized distributor.

® Registered trademark of the International Electrotechnical Commission

Documents
Document Sharing Hub

Full document details: IEC 61300-2-14 2021 RLV

CONTENTS

FOREWORD 3
1 Scope 5
2 Normative references 5
3 Terms, definitions and abbreviated terms 5
3.1 Terms and definitions 5
3.2 Abbreviated terms 6
4 Apparatus 6
4.1 Source (S) 6
4.2 Optical detector (D) 6
4.3 Environmental chamber 7
4.4 Data acquisition system (DAS) 7
4.5 Branching device (BD) 7
4.6 Temporary joints (TJ) 7
4.7 Safety devices 7
4.8 Test set-up 7
5 Procedure 8
5.1 Preconditioning 8
5.2 Initial examinations and measurements 8
5.3 Conditioning 8
5.4 Recovery 9
5.5 Final examinations and measurements 9
6 Severity 9
6.1 General 9
6.2 Optical power 9
6.3 Wavelengths 9
6.4 Temperature 10
6.5 Humidity 10
6.6 Exposure time 10
7 Details to be specified 10
Annex A (normative) Examples of test set-up 11
A.1 WDM devices 11
A.2 Input optical power from both ends 11
A.3 Series connection set-up 12
Annex B (informative) Examples of pass/fail criteria during exposure time 14
B.1 General 14
B.2 Attenuation limitation of monitoring 14
B.3 Return loss limitation 15
B.4 Judgment based on the change 15
Bibliography 16

Figure 1 – Typical optical power test set-up 8
Figure A.1 – Example of optical power test set-up for a 2 x 1 WDM device 11
Figure A.2 – Example of test set-up of both direction input test 12
Figure A.3 – Example of optical power test set-up in series connection 13

AVA Documents
Document Sharing Hub

Full document details: IEC 61300-2-14 2021 RLV

INTERNATIONAL ELECTROTECHNICAL COMMISSION

FIBRE OPTIC INTERCONNECTING DEVICES AND PASSIVE COMPONENTS – BASIC TEST AND MEASUREMENT PROCEDURES –

Part 2-14: Tests – High optical power

FOREWORD

1) The International Electrotechnical Commission (IEC) is a worldwide organization for standardization comprising all national electrotechnical committees (IEC National Committees). The object of IEC is to promote international co-operation on all questions concerning standardization in the electrical and electronic fields. To this end and in addition to other activities, IEC publishes International Standards, Technical Specifications, Technical Reports, Publicly Available Specifications (PAS) and Guides (hereafter referred to as "IEC Publication(s)"). Their preparation is entrusted to technical committees; any IEC National Committee interested in the subject dealt with may participate in this preparatory work. International, governmental and non-governmental organizations liaising with the IEC also participate in this preparation. IEC collaborates closely with the International Organization for Standardization (ISO) in accordance with conditions determined by agreement between the two organizations.
2) The formal decisions or agreements of IEC on technical matters express, as nearly as possible, an international consensus of opinion on the relevant subjects since each technical committee has representation from all interested IEC National Committees.
3) IEC Publications have the form of recommendations for international use and are accepted by IEC National Committees in that sense. While all reasonable efforts are made to ensure that the technical content of IEC Publications is accurate, IEC cannot be held responsible for the way in which they are used or for any misinterpretation by any end user.
4) In order to promote international uniformity, IEC National Committees undertake to apply IEC Publications transparently to the maximum extent possible in their national and regional publications. Any divergence between any IEC Publication and the corresponding national or regional publication shall be clearly indicated in the latter.
5) IEC itself does not provide any attestation of conformity. Independent certification bodies provide conformity assessment services and, in some areas, access to IEC marks of conformity. IEC is not responsible for any services carried out by independent certification bodies.
6) All users should ensure that they have the latest edition of this publication.
7) No liability shall attach to IEC or its directors, employees, servants or agents including individual experts and members of its technical committees and IEC National Committees for any personal injury, property damage or other damage of any nature whatsoever, whether direct or indirect, or for costs (including legal fees) and expenses arising out of the publication, use of, or reliance upon, this IEC Publication or any other IEC Publications.
8) Attention is drawn to the Normative references cited in this publication. Use of the referenced publications is indispensable for the correct application of this publication.
9) Attention is drawn to the possibility that some of the elements of this IEC Publication may be the subject of patent rights. IEC shall not be held responsible for identifying any or all such patent rights.

This redline version of the official IEC Standard allows the user to identify the changes made to the previous edition IEC 61300-2-14:2012. A vertical bar appears in the margin wherever a change has been made. Additions are in green text, deletions are in strikethrough red text.

Documents
Document Sharing Hub

Full document details: IEC 61300-2-14 2021 RLV

International Standard IEC 61300-2-14 has been prepared by subcommittee 86B: Fibre optic interconnecting devices and passive components, of IEC technical committee 86: Fibre optics.

This fourth edition cancels and replaces the third edition published in 2012. This edition constitutes a technical revision.

This edition includes the following significant technical changes with respect to the previous edition:

a) harmonizing IEC 61300-1:2016 and IEC 61300-3-4:2012;

b) addition of abbreviated terms;

c) addition of Clause A.2 regarding input optical power from both ends.

The text of this International Standard is based on the following documents:

CDV	Report on voting
86B/4299/CDV	86B/4362A/RVC

Full information on the voting for the approval of this International Standard can be found in the report on voting indicated in the above table.

This document has been drafted in accordance with the ISO/IEC Directives, Part 2.

A list of all parts in the IEC 61300 series, published under the general title *Fibre optic interconnecting devices and passive components – Basic test and measurement procedures,* can be found on the IEC website.

The committee has decided that the contents of this document will remain unchanged until the stability date indicated on the IEC website under "http://webstore.iec.ch" in the data related to the specific document. At this date, the document will be

- reconfirmed,
- withdrawn,
- replaced by a revised edition, or
- amended.

IMPORTANT – The 'colour inside' logo on the cover page of this publication indicates that it contains colours which are considered to be useful for the correct understanding of its contents. Users should therefore print this document using a colour printer.

Documents
Document Sharing Hub

Full document details: IEC 61300-2-14 2021 RLV

FIBRE OPTIC INTERCONNECTING DEVICES AND PASSIVE COMPONENTS – BASIC TEST AND MEASUREMENT PROCEDURES –

Part 2-14: Tests – High optical power

1 Scope

This part of IEC 61300 describes a procedure for determining the suitability of a fibre optic interconnecting device or a passive component to withstand ~~the~~ exposure to the optical power which ~~may occur~~ occurs during its operation.

~~NOTE General information and guidance concerning relevant test and measurement procedures is contained in IEC 61300-1.~~

2 Normative references

The following documents are referred to in the text in such a way that some or all of their content constitutes requirements of this document. For dated references, only the edition cited applies. For undated references, the latest edition of the referenced document (including any amendments) applies.

IEC 60825-1, *Safety of laser products – Part 1: Equipment classification and requirements*

IEC 61300-1, *Fibre optic interconnecting devices and passive components – Basic test and measurement procedures – Part 1: General and guidance*

IEC 61300-3-1, *Fibre optic interconnecting devices and passive components – Basic test and measurement procedures – Part 3-1: Examinations and measurements – Visual examination*

IEC 61300-3-3, *Fibre optic interconnecting devices and passive components – Basic test and measurement procedures – Part 3-3: Examinations and measurements – Active monitoring of changes in attenuation and return loss*

IEC 61300-3-35, *Fibre optic interconnecting devices and passive components – Basic test and measurement procedures – Part 3-35: Examinations and measurements – ~~Fibre optic connector endface visual and automated inspection~~ Visual inspection of fibre optic connectors and fibre-stub transceivers*

3 Terms, definitions and abbreviated terms

3.1 Terms and definitions

No terms and definitions are listed in this document.

ISO and IEC maintain terminological databases for use in standardization at the following addresses:

- IEC Electropedia: available at http://www.electropedia.org/
- ISO Online browsing platform: available at http://www.iso.org/obp

AVA Documents Document Sharing Hub

Full document details: IEC 61300-2-14 2021 RLV

3.2 Abbreviated terms

CWDM course wavelength division multiplexing

DAS data acquisition system

DUT device under test

DWDM dense wavelength division multiplexing

IL insertion loss

ISO optical isolator

LD laser diode

OSA optical spectrum analyzer

PDL polarization dependent loss

RL return loss

TLS tunable light source

WDL wavelength dependent loss

WDM wavelength division multiplexing

WWDM wide wavelength division multiplexing

4 Apparatus

4.1 Source (S)

The source unit consists of an optical emitter, the means to connect to it and the associated drive electronics. A tunable light source (TLS) in which a specific output wavelength can be tuned may be chosen as the optical emitter. A TLS may consist of a tunable LD and an optical amplifier or a fibre ring laser~~ in order to get an efficient power to test~~. Generally, the power and stability requirements of the test will necessitate that the~~ means to connect to the~~ optical emitter ~~be~~ has a fibre pigtail. It shall~~ be~~ have a stable~~ in~~ output power and wavelength/frequency over the measurement period. For DWDM devices, the frequency~~ uncertainty~~ stability (instead of the wavelength~~ uncertainty~~ stability) shall be less than half of the channel bandwidth. Unless otherwise stated in the relevant specification, the source shall have the following characteristics:

a) centre wavelength~~ uncertainty including~~ stability:

– nominal centre wavelength ±5 nm (for WWDM and CWDM devices);

b) centre frequency~~ uncertainty~~ stability:

– nominal centre frequency ±6,3 GHz (for DWDM devices of 25 GHz channel bandwidth);

– nominal centre frequency ±12,5 GHz (for DWDM devices of 50 GHz channel bandwidth);

– nominal centre frequency ±25 GHz (for DWDM devices of 100 GHz channel bandwidth);

c) output power~~ uncertainty and~~ stability:

– nominal output power ±0,05 dB.

4.2 Optical detector (D)

The optical detector unit~~ is an optical power meter and~~ consists of an optical detector, the means to connect to it and the associated electronics. The detector~~s~~ shall have sufficient dynamic range to make the necessary measurements and shall be linear over the measurement range. The detector~~s~~ shall be stable over the measurement period and shall have an operational wavelength range consistent with the DUT. The connection to the detector~~s~~ shall be an adaptor that accepts a connector plug of the appropriate design. The detector~~s~~ shall be capable of capturing all light emitted by the connector plug. Unless otherwise stated in the relevant specification, the detector~~s~~ shall have the following characteristics:

~~– linearity: ≤ ±0,1 dB;~~

Documents
Document Sharing Hub

~~– uncertainty including polarization dependency: ≤ ±0,05 dB;~~

~~– resolution: ≤ ±0,01 dB.~~

– maximum nonlinearity: ≤ ±0,1 dB;

– accuracy including polarization dependency: ≤ ±0,05 dB;

– resolution: ≤ 0,01 dB.

4.3 Environmental chamber

The test set-up shall include an environmental chamber capable of producing and maintaining the specified temperature and/or humidity.

4.4 Data acquisition system (DAS)

Recording the optical power readings of the optical ~~power readings at the optical~~ detector may be done either manually or automatically. An appropriate DAS shall be used where measurements are performed automatically.

4.5 Branching device (BD)

The splitting ratio of the branching device shall be stable over the optical powers and wavelengths chosen for the test. It shall also be insensitive to polarization. ~~The branching devices shall be stable during the test. The splitting ratio of 1:99 for branching devices is recommended in order to input high power to the DUT and low power to the optical detector.~~ A splitting ratio of 1:99 is recommended for the branching device in order to input high power to the DUT and low power to the optical detector.

4.6 Temporary joints (TJ)

These are typically used in connecting the device under test to the test apparatus. ~~Generally,~~ For the test requirements of optical power and stability ~~requirements of a test will necessitate that~~, the temporary joints shall be fusion splices.

4.7 Safety devices

All necessary safety devices, including laser safety glasses, signs and other safety materials, shall be provided in order to protect individuals from possible hazards during testing.

4.8 Test set-up

For two-port optical components, a typical layout for the test apparatus is shown in Figure 1.

This test procedure involves the use of optical powers which constitute a potential ocular and skin hazard to test personnel. All necessary safety procedures shall be adopted in accordance with IEC 60825-1. In particular, the DUT shall be unpowered (that is, with no power propagating in the fibre) when conducting a visual examination.

Optical connectors shall not be used. Fusion splices shall be used for all connecting points as described in 4.6.

Documents
Document Sharing Hub

Full document details: IEC 61300-2-14 2021 RLV

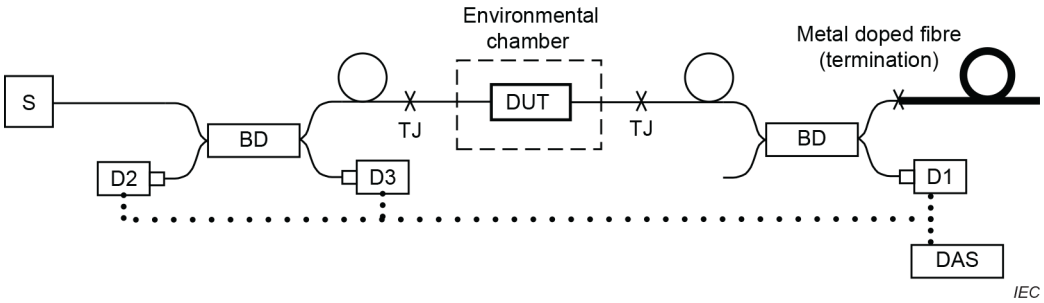

Key

BD branching device

D detector

DAS data acquisition system

DUT device under test

S light source

TJ temporary joint

Figure 1 – Typical optical power test set-up

For multiport devices such as branching devices, all combinations of input and output ports shall be tested, unless otherwise stated in the relevant specification.

For WDM devices, ~~multi-wavelength~~ multiple wavelengths shall be input at the same time according to the application. Clause A.1 describes an example of the test set-up for WDM devices.

~~To minimize test equipments, the DUTs can be connected as a series.~~ To minimize test equipment, the DUTs may be connected in series. Clause A.2 describes an example of the test set-up for ~~a series connection of~~ series-connected DUTs.

5 Procedure

5.1 Preconditioning

The chosen test samples shall be representative of a standard product.

Prepare and clean the DUTs according to the manufacturer's instructions. Visual examination shall be undertaken in accordance with IEC 61300-3-1 and IEC 61300-3-35. Debris or the presence of contamination is one of the primary causes of failure in high optical power connector applications.

NOTE IEC TR 62627-01 describes fibre optic connector cleaning methods.

Precondition the DUTs for 2 h or more at the standard atmospheric conditions as defined in IEC 61300-1, unless otherwise specified in the relevant specification.

5.2 Initial examinations and measurements

~~Complete~~ Perform initial examinations and measurements on the DUTs as required by the relevant specification. The results of the initial measurements shall be within the limits established in the relevant specification.

5.3 Conditioning

a) Set the chamber and the DUT to the standard atmospheric conditions. Place the DUT in the chamber in its normal operating position. The hook-ups of the DUT to the peripheral equipment shall also be placed in their normal operating position, where required.

AVA Documents Document Sharing Hub

b) ~~Adjust~~ Set the chamber temperature and humidity to the specified ~~severity~~ severities (see 6.4 and 6.5). The rate of change of temperature shall not exceed 1 °C/min, averaged over a maximum period of 5 min. Allow the DUT to reach the set stable temperature and maintain the temperature for the exposure time.

c) Set the wavelength and optical power to be input to the DUT and turn on the optical source and input optical power to the DUT.

d) Continue to input the optical power to the DUT for the exposure time specified ~~in severity~~ (see 6.6). Monitor the changes in attenuation and return loss of the DUT according to IEC 61300-3-3 during the exposure time. The changes shall be within the pass criteria specified in the relevant specification (see Annexe B).

NOTE Optical power absorption within the DUT can cause its internal temperature to rise leading to a change in attenuation. The duration of changing attenuation depends on the absorption rate and the thermal capacity of the DUT. Examples of the high power test results are described in IEC TR 62627-03-02 and IEC TR 62627-03-03.

e) At the completion of the exposure time, stop inputting the optical power and change the temperature in the chamber to the standard atmospheric condition. Continue to maintain the DUT in the chamber while the temperature is gradually changed.

5.4 Recovery

Allow the DUT to remain under the standard atmospheric condition for 2 h or more, as defined in IEC 61300-1, unless otherwise specified in the relevant specification.

5.5 Final examinations and measurements

On completion of the test, remove all fixtures and make final examinations and measurements on the DUT, as required by the relevant specification, to ensure that there is no permanent damage to the DUT. Clean the DUT according to the manufacturer's instructions. The results of the final measurement shall be within the limit established in the relevant specification.

Unless otherwise specified in the relevant specification, visually examine the DUT in accordance with IEC 61300-3-1. Check for evidence of any degradation in the DUT. ~~This may~~ These include, for example:

a) broken, loose or damaged parts or accessories;

b) breaking or damage to the cable jacket, seals, strain relief or fibres;

c) displaced, bent, or broken parts.

6 Severity

6.1 General

Severity is a combination of an optical power, a wavelength, a temperature, humidity and an exposure time. The severity shall be specified in the relevant specification.

NOTE IEC TR 62627-03-04 gives guidelines for high optical power testing.

6.2 Optical power

The optical power of the test shall be decided in consideration of the application, unless otherwise stated in the relevant specification. ~~The following optical powers are examples~~ The recommended power levels for testing are:

10 mW, 30 mW, 50 mW, 100 mW, 300 mW and 500 mW.

6.3 Wavelengths

The test wavelength shall be the centre or typical wavelength of all operating wavelength ranges specified in the relevant specification. ~~The following wavelengths are examples~~ The recommended wavelengths for testing are:

AVA Documents
Document Sharing Hub

980 nm, 1 310 nm, 1 490 nm, 1 510 nm, 1 550 nm, 1 580 nm, 1 610 nm, 1 625 nm and 1 650 nm.

For WDM devices, the combinations of multi-wavelengths which are input at the same time shall be decided in consideration of the application, unless otherwise stated in the relevant specification.

6.4 Temperature

Unless otherwise stated in the relevant specification, the test temperature shall be the maximum temperature of the operating temperature range specified in the relevant specification.

6.5 Humidity

Unless otherwise stated in the relevant specification, the test humidity shall be controlled at the maximum humidity of the operating humidity range specified in the relevant specification.

~~In case the DUT is hermetically seal-packaged, the test humidity does not need to be controlled.~~

6.6 Exposure time

The test exposure time shall be decided in consideration of the thermal capacity of the DUT. For a small component whose weight is ~~approximately~~ less than 0,1 kg, a test exposure time of 30 min is recommended.

7 Details to be specified

The following details, as applicable, shall be specified in the relevant specification:

a) optical power;

b) wavelengths;

c) temperature;

d) humidity;

e) exposure time;

f) initial examinations, initial measurements and initial performance requirements;

g) examinations during test, measurements during test and performance requirements during test;

h) final examinations, final measurements and final performance requirements;

i) deviations from test procedure;

j) additional pass/fail criteria;

k) number of ports and combinations of input and output ports;

l) combinations of ~~multi-~~multiple wavelengths which are input at the same time for WDM devices.

Documents
Document Sharing Hub

Full document details: IEC 61300-2-14 2021 RLV

Annex A
(normative)

Examples of test set-up

A.1 WDM devices

For WDM devices, ~~multi-wavelength shall be~~ multiple wavelengths are input at the same time according to the application. For two inputs/one output WDM components, an example layout for the test apparatus is shown in Figure A.1.

The optical power of the first wavelength is input from the source S1. In addition, the optical power of the second wavelength is input from the source S2 at the same time. The optical power ratio of the first wavelength and second wavelength shall be stated in the relevant specification, based on the application. In Figure A.1, the attenuation changes for the first wavelength and second wavelength are monitored at the wavelength tunable optical detector D1, respectively. For the tunable optical detector D1, an OSA (optical spectrum analyzer), or a combination of a tunable filter and an optical power meter, is recommended.

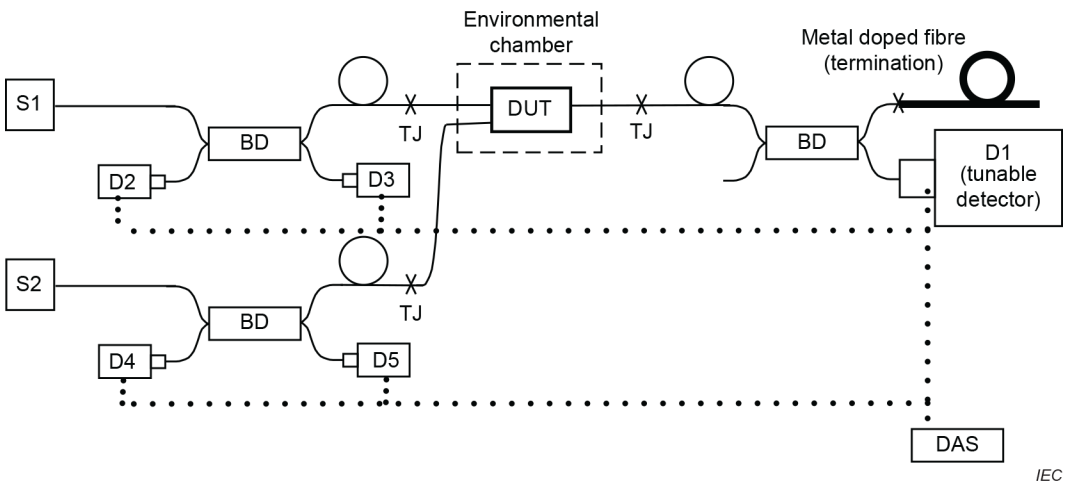

Key

BD branching device

D detector

DAS data acquisition system

DUT device under test

S light source

TJ temporary joint

Figure A.1 – Example of optical power test set-up for a 2 x 1 WDM device

A.2 Input optical power from both ends

When optical power input into both ends of the DUT is required, two light sources, two branching devices and two detectors shall be used (see Figure A.2). To prevent optical power fluctuation, it is recommended that optical isolators be used with each light source.

It is difficult to monitor the optical output power during the test. Therefore, the optical performance, such as insertion loss (attenuation), return loss and isolation, shall be measured before the test.

AVA Documents Document Sharing Hub

During the test, any input power changes of the light sources S1 and S2 are monitored by detectors D1 and D2, respectively.

After the test, the DUT's optical performance shall be measured. The performance changes shall be calculated.

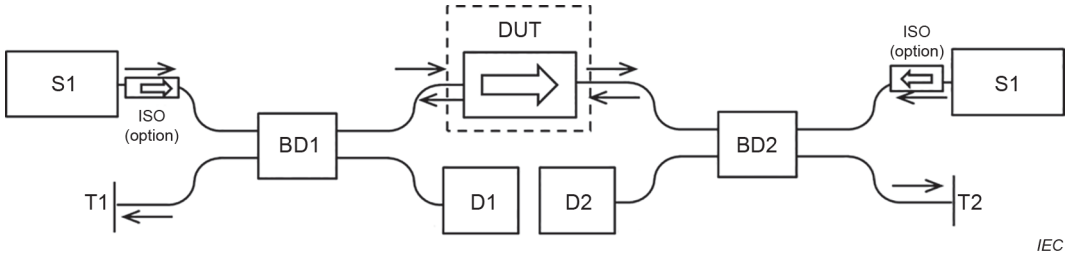

Key

BD branching device

D detector

DUT device under test

ISO optical isolator

S light source

T termination

Figure A.2 – Example of test set-up of both direction input test

A.3 Series connection set-up

~~To minimize test equipments, the DUT can be connected as a series.~~ To minimize test equipment, DUTs may be connected in series. To test three DUTs simultaneously, an example layout for the test apparatus is shown in Figure A.3.

In this set-up, the optical power input to the last DUT, for example DUT3 in Figure A.3, shall be equal or higher than the optical power specified in the relevant specification.

Documents
Document Sharing Hub
Full document details: IEC 61300-2-14 2021 RLV

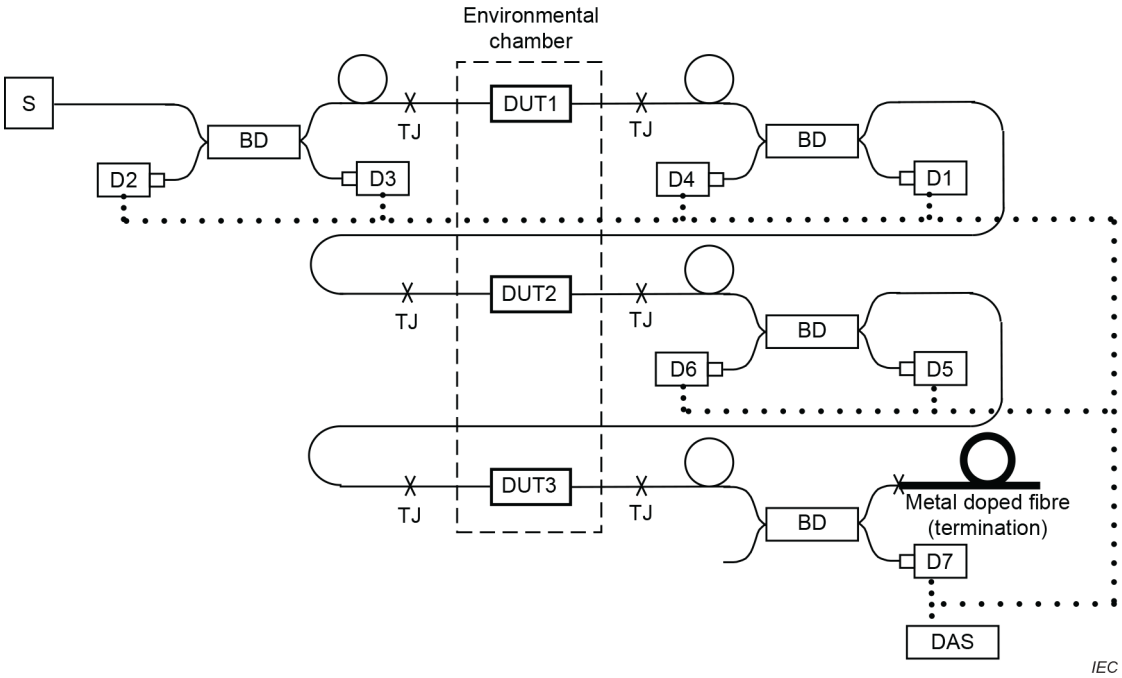

Key

BD branching device

D detector

DAS data acqusition system

DUT device under test

S light source

TJ temporary joint

Figure A.3 – Example of optical power test set-up in series connection

Documents
Document Sharing Hub
Full document details: IEC 61300-2-14 2021 RLV

Annex B
(informative)

Examples of pass/fail criteria during exposure time

B.1 General

~~During the exposure time of the optical power, only the changes in attenuation and return loss can be measured according to IEC 61300-3-3. It shall be noted that polarization dependent loss (PDL) and wavelength dependent loss (WDL) are difficult to monitor and the measurement uncertainty might be larger than the initial and final measurements according to IEC 61300-3-4 or some other standards in the IEC 61300 series.~~

During the exposure time of the optical power, only the changes in attenuation and return loss can be measured according to IEC 61300-3-3. It is noted that the polarization dependent loss (PDL) and the wavelength dependent loss (WDL) can affect the measurement uncertainty of insertion loss (IL) change and the return loss (RL) change during the test, and PDL and WDL are difficult to monitor during the test.

Therefore, the measurement uncertainties of the IL change and RL change during the test can be larger than those of the differences of those measured before and after the test according to IEC 61300-3-4 or some other standards in the IEC 61300 series.

B.2 Attenuation limitation of monitoring

The pass/fail criteria for attenuation limitation during the exposure ~~shall~~ should include a consideration of uncertainties caused by PDL, WDL and the measurement system itself, in order to prevent the misclassification of a DUT within the limitation being misjudged as a failure DUT. This attenuation limitation of monitoring could pass over some DUTs, with slightly high attenuation, from being classified as failure; however, some of those DUTs could be marked as a failure in the final measurement.

An example of attenuation limitation of monitoring $A_{\text{limit,mon}}$ (dB) is:

$$\cancel{A_{\text{limit,mon}} = A_{\text{limit,offline}} + A_{\text{PDL}} + A_{\text{WDL}} + A_{\text{error}}}$$

$$A_{\text{limit,mon}} = A_{\text{limit,offline}} + A_{\text{PDL}} + A_{\text{WDL}} + A_{\text{uncer}}$$

where

$A_{\text{limit,offline}}$ is the original attenuation limitation of offline measurement for initial and final measurement (dB);

A_{PDL} is the PDL of the DUT or a constant specified in the relevant specification (dB);

A_{WDL} is the WDL of the DUT or a constant specified in the relevant specification (dB);

A_{uncer} is the value based on the measurement uncertainty of the system including light source stability, detector uncertainty including nonlinearity, accuracy, polarization dependency and resolution, and losses of temporary joints (dB).

~~A_{error} is the value based on the measurement error of the system including light source stability, detector uncertainty and losses of temporary joints (dB).~~

Documents
Document Sharing Hub
Full document details: IEC 61300-2-14 2021 RLV

During monitoring, the change of attenuation ΔA (dB) ~~should be~~ is within the following formula:

$$\Delta A(t) \leq A_{\text{limit,offline}} - A_{0,\text{ini}}$$

where

$A_{0,\text{ini}}$	is the attenuation of the DUT measured in the initial measurement according to IEC 61300-3-4;
$\Delta A(t)$	is the change of attenuation calculated from the measured optical power change as $\Delta A(t) = P(t) - P(t = 0)$;
$P(t = 0)$	is the measured output optical power at the first measurement of monitoring;
$P(t)$	is the measured output optical power at the time of t.

B.3 Return loss limitation

The pass/fail criteria for return loss during the exposure could be specified by a similar method.

Sometimes, the measurement system used for high optical power is not suitable for the measurement of very high return loss limitation specified for initial and final measurement. In such a case, another pass/fail criterion ~~shall~~ should be adopted. An example is described in Clause B.4.

B.4 Judgment based on the change

These examples of pass/fail criteria could be adopted as additional or alternative requirements for Clause B.1 and Clause B.2. During monitoring, the change of attenuation ΔA (dB) and the change of return loss ΔRL (dB) ~~shall~~ should be within the following ~~requirements~~ recommendations:

– for a component with an initial insertion loss of less than 1,0 dB, $\Delta A \leq$ 0,3 dB;
– for a component with an initial insertion loss of less than 2,0 dB, $\Delta A \leq$ 0,5 dB;
– for a component with an initial insertion loss of 2,0 dB or more, and less than 10,0 dB, $\Delta A \leq$ 1,0 dB;
– for a component with an initial insertion loss of 10,0 dB or more, $\Delta A \leq$ 2,0 dB;
– $|\Delta RL| \leq$ 10,0 dB.

where the initial insertion loss is measured in the initial measurement.

Documents
Document Sharing Hub
Full document details: IEC 61300-2-14 2021 RLV