IEC 61300-2-24

Edition 2.0 2010-04

INTERNATIONAL STANDARD

NORME INTERNATIONALE

colour inside

Fibre optic interconnecting devices and passive components – Basic test and measurement procedures – Part 2-24: Tests – Screen testing of ceramic alignment split sleeve by stress application

Dispositifs d'interconnexion et composants passifs à fibres optiques – Méthodes fondamentales d'essais et de mesures – Partie 2-24: Essais – Essai de sélection du manchon d'alignement fendu en céramique par l'application de contrainte

IEC 61300-2-24:2010

Documents
Document Sharing Hub

Full document details: IEC 61300-2-24 2010

THIS PUBLICATION IS COPYRIGHT PROTECTED

Copyright © 2010 IEC, Geneva, Switzerland

All rights reserved. Unless otherwise specified, no part of this publication may be reproduced or utilized in any form or by any means, electronic or mechanical, including photocopying and microfilm, without permission in writing from either IEC or IEC's member National Committee in the country of the requester.
If you have any questions about IEC copyright or have an enquiry about obtaining additional rights to this publication, please contact the address below or your local IEC member National Committee for further information.

Droits de reproduction réservés. Sauf indication contraire, aucune partie de cette publication ne peut être reproduite ni utilisée sous quelque forme que ce soit et par aucun procédé, électronique ou mécanique, y compris la photocopie et les microfilms, sans l'accord écrit de la CEI ou du Comité national de la CEI du pays du demandeur.
Si vous avez des questions sur le copyright de la CEI ou si vous désirez obtenir des droits supplémentaires sur cette publication, utilisez les coordonnées ci-après ou contactez le Comité national de la CEI de votre pays de résidence.

IEC Central Office
3, rue de Varembé
CH-1211 Geneva 20
Switzerland
Email: inmail@iec.ch
Web: www.iec.ch

About the IEC

The International Electrotechnical Commission (IEC) is the leading global organization that prepares and publishes International Standards for all electrical, electronic and related technologies.

About IEC publications

The technical content of IEC publications is kept under constant review by the IEC. Please make sure that you have the latest edition, a corrigenda or an amendment might have been published.

- Catalogue of IEC publications: www.iec.ch/searchpub
The IEC on-line Catalogue enables you to search by a variety of criteria (reference number, text, technical committee,…). It also gives information on projects, withdrawn and replaced publications.
- IEC Just Published: www.iec.ch/online_news/justpub
Stay up to date on all new IEC publications. Just Published details twice a month all new publications released. Available on-line and also by email.
- Electropedia: www.electropedia.org
The world's leading online dictionary of electronic and electrical terms containing more than 20 000 terms and definitions in English and French, with equivalent terms in additional languages. Also known as the International Electrotechnical Vocabulary online.
- Customer Service Centre: www.iec.ch/webstore/custserv
If you wish to give us your feedback on this publication or need further assistance, please visit the Customer Service Centre FAQ or contact us:
Email: csc@iec.ch
Tel.: +41 22 919 02 11
Fax: +41 22 919 03 00

A propos de la CEI

La Commission Electrotechnique Internationale (CEI) est la première organisation mondiale qui élabore et publie des normes internationales pour tout ce qui a trait à l'électricité, à l'électronique et aux technologies apparentées.

A propos des publications CEI

Le contenu technique des publications de la CEI est constamment revu. Veuillez vous assurer que vous possédez l'édition la plus récente, un corrigendum ou amendement peut avoir été publié.

- Catalogue des publications de la CEI: www.iec.ch/searchpub/cur_fut-f.htm
Le Catalogue en-ligne de la CEI vous permet d'effectuer des recherches en utilisant différents critères (numéro de référence, texte, comité d'études,…). Il donne aussi des informations sur les projets et les publications retirées ou remplacées.
- Just Published CEI: www.iec.ch/online_news/justpub
Restez informé sur les nouvelles publications de la CEI. Just Published détaille deux fois par mois les nouvelles publications parues. Disponible en-ligne et aussi par email.
- Electropedia: www.electropedia.org
Le premier dictionnaire en ligne au monde de termes électroniques et électriques. Il contient plus de 20 000 termes et définitions en anglais et en français, ainsi que les termes équivalents dans les langues additionnelles. Egalement appelé Vocabulaire Electrotechnique International en ligne.
- Service Clients: www.iec.ch/webstore/custserv/custserv_entry-f.htm
Si vous désirez nous donner des commentaires sur cette publication ou si vous avez des questions, visitez le FAQ du Service clients ou contactez-nous:
Email: csc@iec.ch
Tél.: +41 22 919 02 11
Fax: +41 22 919 03 00

Documents
Document Sharing Hub

Full document details: IEC 61300-2-24 2010

IEC 61300-2-24

Edition 2.0 2010-04

INTERNATIONAL STANDARD

NORME INTERNATIONALE

colour inside

Fibre optic interconnecting devices and passive components – Basic test and measurement procedures – Part 2-24: Tests – Screen testing of ceramic alignment split sleeve by stress application

Dispositifs d'interconnexion et composants passifs à fibres optiques – Méthodes fondamentales d'essais et de mesures – Partie 2-24: Essais – Essai de sélection du manchon d'alignement fendu en céramique par l'application de contrainte

INTERNATIONAL ELECTROTECHNICAL COMMISSION

COMMISSION ELECTROTECHNIQUE INTERNATIONALE

PRICE CODE
CODE PRIX P

ICS 33.180.20

ISBN 978-2-88912-460-2

® Registered trademark of the International Electrotechnical Commission
Marque déposée de la Commission Electrotechnique Internationale

Documents
Document Sharing Hub

Full document details: IEC 61300-2-24 2010

CONTENTS

FOREWORD 3
1 Scope 5
2 General description 5
3 Apparatus 5
4 Procedure 7
5 Details to be specified 7
Annex A (informative) Static fatigue for zirconia alignment sleeve 8
Bibliography 15

Figure 1 – Apparatus used for screen testing of a ceramic alignment sleeve 6
Figure A.1 – Model of time-varying proof stress for a zirconia sleeve 10
Figure A.2 – Calculated contour lines of gauge retention force and working stress along with inner and outer diameter of a zirconia sleeve 11
Figure A.3 – Calculated general relationship between σ_p/σ_a and t_e, satisfying 0,1 FIT for 20 years use 12
Figure A.4 – Calculated failure probability of screened zirconia sleeves along with working time 12
Figure A.5 – Measured and calculated strength distribution of 2,5 mm zirconia sleeves (comparison between sleeves, extended proof tested or not) 13
Figure A.6 – Measured strength distribution of 1,25 mm zirconia sleeves (comparison between sleeves, extended proof tested or not) 14

Table 1 – Dimension example of the reference gauge and the plate for the ceramic sleeve 6
Table 2 – Dimension example of a commonly used ceramic alignment sleeve 7
Table A.1 – Measured static fatigue parameters for zirconia sleeves 11

Documents
Document Sharing Hub
Full document details: IEC 61300-2-24 2010

INTERNATIONAL ELECTROTECHNICAL COMMISSION

FIBRE OPTIC INTERCONNECTING DEVICES AND PASSIVE COMPONENTS – BASIC TEST AND MEASUREMENT PROCEDURES –

Part 2-24: Tests – Screen testing of ceramic alignment split sleeve by stress application

FOREWORD

1) The International Electrotechnical Commission (IEC) is a worldwide organization for standardization comprising all national electrotechnical committees (IEC National Committees). The object of IEC is to promote international co-operation on all questions concerning standardization in the electrical and electronic fields. To this end and in addition to other activities, IEC publishes International Standards, Technical Specifications, Technical Reports, Publicly Available Specifications (PAS) and Guides (hereafter referred to as "IEC Publication(s)"). Their preparation is entrusted to technical committees; any IEC National Committee interested in the subject dealt with may participate in this preparatory work. International, governmental and non-governmental organizations liaising with the IEC also participate in this preparation. IEC collaborates closely with the International Organization for Standardization (ISO) in accordance with conditions determined by agreement between the two organizations.
2) The formal decisions or agreements of IEC on technical matters express, as nearly as possible, an international consensus of opinion on the relevant subjects since each technical committee has representation from all interested IEC National Committees.
3) IEC Publications have the form of recommendations for international use and are accepted by IEC National Committees in that sense. While all reasonable efforts are made to ensure that the technical content of IEC Publications is accurate, IEC cannot be held responsible for the way in which they are used or for any misinterpretation by any end user.
4) In order to promote international uniformity, IEC National Committees undertake to apply IEC Publications transparently to the maximum extent possible in their national and regional publications. Any divergence between any IEC Publication and the corresponding national or regional publication shall be clearly indicated in the latter.
5) IEC itself does not provide any attestation of conformity. Independent certification bodies provide conformity assessment services and, in some areas, access to IEC marks of conformity. IEC is not responsible for any services carried out by independent certification bodies.
6) All users should ensure that they have the latest edition of this publication.
7) No liability shall attach to IEC or its directors, employees, servants or agents including individual experts and members of its technical committees and IEC National Committees for any personal injury, property damage or other damage of any nature whatsoever, whether direct or indirect, or for costs (including legal fees) and expenses arising out of the publication, use of, or reliance upon, this IEC Publication or any other IEC Publications.
8) Attention is drawn to the Normative references cited in this publication. Use of the referenced publications is indispensable for the correct application of this publication.
9) Attention is drawn to the possibility that some of the elements of this IEC Publication may be the subject of patent rights. IEC shall not be held responsible for identifying any or all such patent rights.

International Standard IEC 61300-2-24 has been prepared by subcommittee 86B: Fibre optic interconnecting devices and passive components, of IEC technical committee 86: Fibre optics.

This second edition replaces the first edition published in 1999. This second edition constitutes a technical revision. Specific technical changes involve the addition of a dimension example of the reference gauge and the plate for the ceramic sleeve and a commonly used ceramic alignment sleeve for the 1,25 mm ceramic sleeve.

This bilingual version, published in 2011-04, corresponds to the English version.

AVA Documents
Document Sharing Hub

Full document details: IEC 61300-2-24 2010

The text of this standard is based on the following documents:

FDIS	Report on voting
86B/2967/FDIS	86B/3014/RVD

Full information on the voting for the approval of this standard can be found in the report on voting indicated in the above table.

This publication has been drafted in accordance with the ISO/IEC Directives, Part 2.

A list of all parts of IEC 61300 series, published under the general title, *Fibre optic interconnecting and passive components – Basic test and measurement procedures*, can be found on the IEC website.

The committee has decided that the contents of this publication will remain unchanged until the stability date indicated on the IEC web site under "http://webstore.iec.ch" in the data related to the specific publication. At this date, the publication will be

- reconfirmed,
- withdrawn,
- replaced by a revised edition, or
- amended.

IMPORTANT – The 'colour inside' logo on the cover page of this publication indicates that it contains colours which are considered to be useful for the correct understanding of its contents. Users should therefore print this document using a colour printer.

Documents
Document Sharing Hub

Full document details: IEC 61300-2-24 2010

FIBRE OPTIC INTERCONNECTING DEVICES AND PASSIVE COMPONENTS – BASIC TEST AND MEASUREMENT PROCEDURES –

Part 2-24: Tests – Screen testing of ceramic alignment split sleeve by stress application

1 Scope

The purpose of this part of IEC 61300 is to identify weaknesses in a ceramic alignment split sleeve which could lead to early failure of the component.

2 General description

Ceramic alignment sleeves are important components often used in the adaptor of plug-adaptor-plug optical connector sets. By using the method described, the component is subjected to a proof stress greater than would be experienced under normal service conditions. This enables weak products to be screened out.

3 Apparatus

The apparatus and arrangement necessary to perform this screening procedure are shown in Figure 1. The material needed consists of the following:

a) a reference gauge made of ceramic with a sleeve-holding section, a tapered section and a stress-applying section. The diameter of each section is dependent on the dimensions of the product being screened. The length of the sleeve-holding section and the stress-applying section should be greater than the component being tested;

b) plates A and B, each having a clearance hole in the centre to allow the plate to move a sample of a ceramic alignment split sleeve on the reference gauge.

Documents
Document Sharing Hub

Full document details: IEC 61300-2-24 2010

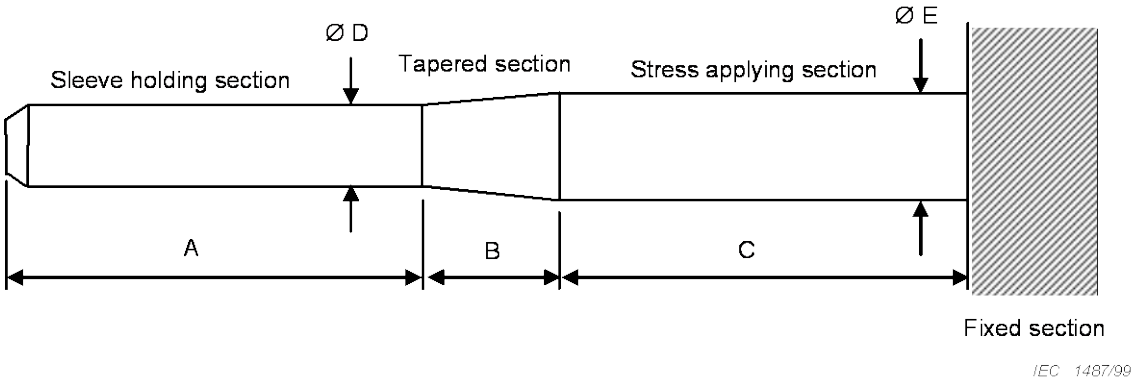

Figure 1a – Reference gauge

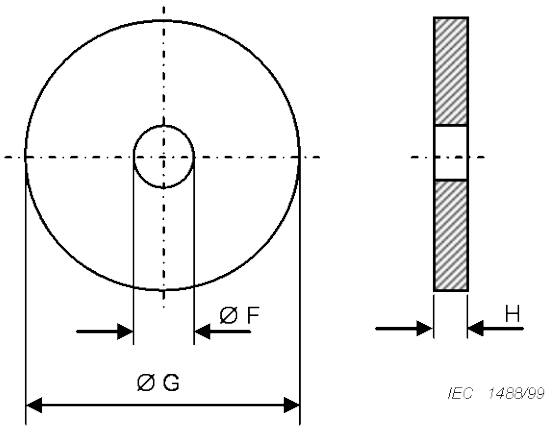

Figure 1b – Plate A and plate B

Figure 1 – Apparatus used for screen testing of a ceramic alignment sleeve

Table 1 shows the dimension of the reference gauge and the plate for the ceramic split sleeve. A dimension of the stress-applying section diameter (E) is shown for a commonly used ceramic alignment sleeve in Table 2.

Table 1 – Dimension example of the reference gauge and the plate for the ceramic sleeve

Reference	For 1,25 mm gauge Dimension mm	For 2,5 mm gauge Dimension mm	Notes
A	9	14	NOTE 2
B	5	5	
C	9	14	NOTE 2
D	–	–	NOTE 1
E	1,259 0 ± 0,000 5	2,515	
F	–	–	NOTE 3
G	20	20	
H	2	2	

NOTE 1 This diameter should be less than the inner diameter of the split sleeve.

NOTE 2 Surface finish in this area Ra = 0,2 µm.

NOTE 3 Dimension F should be greater than dimension E, and less than sleeve ØD.

AVA Documents
Document Sharing Hub

Full document details: IEC 61300-2-24 2010

Table 2 – Dimension example of a commonly used ceramic alignment sleeve

Items	For 1,25 mm Dimension mm	For 2,5 mm Dimension mm
Length	6,8	10,1
Outer diameter	1,62	3,2
Inner diameter (ref.)	1,246	2,49
Split section width	6,8	10,1

4 Procedure

This test should be carried out under a 23 °C ± 2 °C environmental temperature condition.

The procedure is as follows.

a) Insert plate A into the reference gauge and set it at the fixed end of the reference gauge.

b) Moisten the inside surface of a ceramic split sleeve sample with distilled water (for example using a cotton bud). Only touch the sleeve with suitable tools.

c) The sample sleeve is inserted onto the sleeve-holding part and set just in front of the tapered part of the reference gauge.

d) Insert plate B into the left-hand side of the sample sleeve and move the sample sleeve onto the stress-applying part until the sample sleeve touches plate A (within approximately 1 s).

e) The sample sleeve should be held for 3 s under the stressed state.

f) After 3 s, stress applied to the sample sleeve is removed by moving plate A to the left-hand side (within approximately 1 s).

g) In the course of the procedure from d) to f), samples without damage (breakage or crack) should be selected as acceptable sleeves.

5 Details to be specified

The following details shall be specified depending on the sample sleeve size in the detail specification:

– diameter of sleeve-holding part of reference gauge (ØD);

– diameter of stress-applying part of reference gauge (ØE);

– length of sleeve-holding part (A) and stress-applying part (C);

– diameter of the center hole of plates A and B (ØF);

– deviations from test procedure.

Documents
Document Sharing Hub

Full document details: IEC 61300-2-24 2010

Annex A
(informative)

Static fatigue for zirconia alignment sleeve

A.1 Prediction of failure probability by static fatigue

This annex applies primarily to 2,5 mm zirconia alignment sleeves supported by references [1] to [5][1]. For 1,25 mm zirconia sleeves, a comprehensive analysis is referenced [6] and the strength distribution is shown in Figure A.6. Micro-cracks essentially exist on the surface or inside of ceramics. Therefore, fracture due to static fatigue occurs in ceramics under lower stress than the characteristic strength of the materials because of crack propagation in ceramic materials [1] [2].

Assurance of reliable optical fibre connections requires the prediction of failure probability of the zirconia sleeves under working stress needed to align the ferrules.

Assuming aligned ferrules of optical connectors, the zirconia sleeves are allowed to stand under a constant stress, as working stress σ_a. Based on the theories of Weibull statistics and slow crack growth for brittle materials, cumulative failure probability F of the zirconia sleeves suffering from working stress is given by the following equation:

$$\ln\frac{1}{1-F} = \frac{m}{N-1}\ln\sigma_a^N\, t_a + \ln\gamma \qquad \text{(A.1)}$$

with

$$\gamma \equiv \frac{V_e}{\sigma_0^m\ \beta^{m/(N-2)}}$$

$$\beta \equiv \frac{2}{(N-2)\,AY^2\,K_{IC}^{(N-2)}}$$

where

t_a	is the working time during which the working stress σ_a is applied;
m, V_e and σ_0	are the Weibull modulus, effective volume, and normalization constant to express the failure probability by the Weibull statistics theory, respectively;
Y	is the geometry constant;
K_{IC}	is the critical stress intensity factor;
A and N	are crack propagation constants of the brittle materials [2].

[1] Figures in square brackets refer to the Bibliography.

Documents
Document Sharing Hub
Full document details: IEC 61300-2-24 2010

These crack propagation constants depend on environmental conditions such as temperature, humidity, atmosphere, and material characteristics. Therefore, if m, N and γ values are estimated, the static fatigue life time of sleeves is predicted. The N value is estimated by the dynamic fatigue test that measures the strength of a sleeve corresponding variable of the proportional increased stress coefficient σ' in MPa/s. On the other hand, the relationship between F, strength σ_f of sleeves and σ' is given by executing the sleeve destructive test. The slope m and the intercept $\ln\sigma$ are estimated from equation (A.2).

$$\ln\frac{1}{1-F} = m\ \ln\frac{\sigma_f^{(N+1)/(N-1)}}{\{(N+1)\sigma'\}^{1/(N-2)}} + \ln\gamma \qquad \text{(A.2)}$$

A.2 Reliability improvement by proof test

In order to improve the reliability of the zirconia sleeve against fracture due to static fatigue, a proof test that initially eliminates weak zirconia sleeves by applying a greater stress (called proof stress) than the working stress is effective. Fatigue also occurs under the proof stress. However, the proof test conditions should be decided in order to take into consideration fatigue during the proof test [3] [4].

When the proof test is performed, the proof stress σ_p applied to the zirconia changes trapezoidally along with time as shown in Figure A.1. In this figure, stress change is defined as follows:

$0 < t \le t_l$: $\sigma(t) = \sigma' t$

$t_l < t \le t_l + t_p$: $\sigma(t) = \sigma_p$

$t_l + t_p < t \le t_l + t_p + t_u$: $\sigma(t) = \sigma_p - \sigma' t$

where

$$\sigma' = \sigma_p / t_l = \sigma_p / t_u$$

The cumulative failure probability F_r after proof testing is given by equation (A.3):

$$\ln\frac{1}{1-F_r} = \ln\left[\left\{\left(\sigma_a^{N} t_a\right)^{(N_p-2)/(N-2)} + \zeta^{(N_p-2)}\delta^{(N_p-2)/m}\right\}^{m/(N_p-2)} - \zeta^m\delta\right] + \ln\gamma \qquad \text{(A.3)}$$

with

$$\zeta \equiv \left(\sigma_p^{N_p} t_e\right)^{1/(N_p-2)}$$

$$\delta \equiv \frac{\gamma_p}{\gamma} \equiv \left(\frac{\beta^{1/(N-2)}}{\beta_p^{1/(N_p-2)}}\right)^m$$

Documents
Document Sharing Hub
Full document details: IEC 61300-2-24 2010