IEC 61300-2-4

Edition 2.1 2020-01

CONSOLIDATED VERSION

VERSION CONSOLIDÉE

colour inside

Fibre optic interconnecting devices and passive components – Basic test and measurement procedures – Part 2-4: Tests – Fibre or cable retention

Dispositifs d'interconnexion et composants passifs fibroniques – Procédures fondamentales d'essais et de mesures – Partie 2-4: Essais – Rétention de la fibre ou du câble

IEC 61300-2-4:2019-01+AMD1:2020-01 CSV(en-fr)

Documents
Document Sharing Hub

Full document details: IEC 61300-2-4-2020

THIS PUBLICATION IS COPYRIGHT PROTECTED
Copyright © 2020 IEC, Geneva, Switzerland

All rights reserved. Unless otherwise specified, no part of this publication may be reproduced or utilized in any form or by any means, electronic or mechanical, including photocopying and microfilm, without permission in writing from either IEC or IEC's member National Committee in the country of the requester. If you have any questions about IEC copyright or have an enquiry about obtaining additional rights to this publication, please contact the address below or your local IEC member National Committee for further information.

Droits de reproduction réservés. Sauf indication contraire, aucune partie de cette publication ne peut être reproduite ni utilisée sous quelque forme que ce soit et par aucun procédé, électronique ou mécanique, y compris la photocopie et les microfilms, sans l'accord écrit de l'IEC ou du Comité national de l'IEC du pays du demandeur. Si vous avez des questions sur le copyright de l'IEC ou si vous désirez obtenir des droits supplémentaires sur cette publication, utilisez les coordonnées ci-après ou contactez le Comité national de l'IEC de votre pays de résidence.

IEC Central Office
3, rue de Varembé
CH-1211 Geneva 20
Switzerland

Tel.: +41 22 919 02 11
info@iec.ch
www.iec.ch

About the IEC
The International Electrotechnical Commission (IEC) is the leading global organization that prepares and publishes International Standards for all electrical, electronic and related technologies.

About IEC publications
The technical content of IEC publications is kept under constant review by the IEC. Please make sure that you have the latest edition, a corrigendum or an amendment might have been published.

IEC publications search - webstore.iec.ch/advsearchform
The advanced search enables to find IEC publications by a variety of criteria (reference number, text, technical committee,…). It also gives information on projects, replaced and withdrawn publications.

IEC Just Published - webstore.iec.ch/justpublished
Stay up to date on all new IEC publications. Just Published details all new publications released. Available online and once a month by email.

IEC Customer Service Centre - webstore.iec.ch/csc
If you wish to give us your feedback on this publication or need further assistance, please contact the Customer Service Centre: sales@iec.ch.

Electropedia - www.electropedia.org
The world's leading online dictionary on electrotechnology, containing more than 22 000 terminological entries in English and French, with equivalent terms in 16 additional languages. Also known as the International Electrotechnical Vocabulary (IEV) online.

IEC Glossary - std.iec.ch/glossary
67 000 electrotechnical terminology entries in English and French extracted from the Terms and definitions clause of IEC publications issued between 2002 and 2015. Some entries have been collected from earlier publications of IEC TC 37, 77, 86 and CISPR.

A propos de l'IEC
La Commission Electrotechnique Internationale (IEC) est la première organisation mondiale qui élabore et publie des Normes internationales pour tout ce qui a trait à l'électricité, à l'électronique et aux technologies apparentées.

A propos des publications IEC
Le contenu technique des publications IEC est constamment revu. Veuillez vous assurer que vous possédez l'édition la plus récente, un corrigendum ou amendement peut avoir été publié.

Recherche de publications IEC - webstore.iec.ch/advsearchform
La recherche avancée permet de trouver des publications IEC en utilisant différents critères (numéro de référence, texte, comité d'études,…). Elle donne aussi des informations sur les projets et les publications remplacées ou retirées.

IEC Just Published - webstore.iec.ch/justpublished
Restez informé sur les nouvelles publications IEC. Just Published détaille les nouvelles publications parues. Disponible en ligne et une fois par mois par email.

Service Clients - webstore.iec.ch/csc
Si vous désirez nous donner des commentaires sur cette publication ou si vous avez des questions contactez-nous: sales@iec.ch.

Electropedia - www.electropedia.org
Le premier dictionnaire d'électrotechnologie en ligne au monde, avec plus de 22 000 articles terminologiques en anglais et en français, ainsi que les termes équivalents dans 16 langues additionnelles. Egalement appelé Vocabulaire Electrotechnique International (IEV) en ligne.

Glossaire IEC - std.iec.ch/glossary
67 000 entrées terminologiques électrotechniques, en anglais et en français, extraites des articles Termes et définitions des publications IEC parues entre 2002 et 2015. Plus certaines entrées antérieures extraites des publications des CE 37, 77, 86 et CISPR de l'IEC.

Documents
Document Sharing Hub

Full document details: IEC 61300-2-4-2020

IEC 61300-2-4

Edition 2.1 2020-01

CONSOLIDATED VERSION

VERSION CONSOLIDÉE

colour inside

Fibre optic interconnecting devices and passive components – Basic test and measurement procedures – Part 2-4: Tests – Fibre or cable retention

Dispositifs d'interconnexion et composants passifs fibroniques – Procédures fondamentales d'essais et de mesures – Partie 2-4: Essais – Rétention de la fibre ou du câble

INTERNATIONAL ELECTROTECHNICAL COMMISSION

COMMISSION ELECTROTECHNIQUE INTERNATIONALE

ICS 33.180.20

ISBN 978-2-8322-7797-3

Warning! Make sure that you obtained this publication from an authorized distributor.
Attention! Veuillez vous assurer que vous avez obtenu cette publication via un distributeur agréé.

AVA Documents
Document Sharing Hub

® Registered trademark of the International Electrotechnical Commission
Marque déposée de la Commission Electrotechnique Internationale

Full document details: IEC 61300-2-4-2020

Documents
Document Sharing Hub

Full document details: IEC 61300-2-4-2020

IEC 61300-2-4

Edition 2.1 2020-01

REDLINE VERSION

VERSION REDLINE

colour inside

Fibre optic interconnecting devices and passive components – Basic test and measurement procedures –
Part 2-4: Tests – Fibre or cable retention

Dispositifs d'interconnexion et composants passifs fibroniques – Procédures fondamentales d'essais et de mesures –
Partie 2-4: Essais – Rétention de la fibre ou du câble

IEC 61300-2-4:2019-01+AMD1:2020-01 CSV(en-fr)

AVA Documents
Document Sharing Hub

Full document details: IEC 61300-2-4-2020

CONTENTS

FOREWORD 3
1 Scope 5
2 Normative references 5
3 Terms and definitions 5
4 General description 6
5 Apparatus 6
5.1 Mandrel 6
5.2 Holding fixture 8
5.3 Force generator 8
5.4 Force gauge 8
5.5 Alternative apparatus 8
5.6 Timer 9
5.7 Measurement equipment 9
6 Procedure 9
6.1 Preparation of DUTs 9
6.2 Pre-conditioning 9
6.3 Mounting DUT and visual inspection of the mounted DUT 9
6.4 Initial examination 9
6.5 Conditioning and optical measurement during the conditioning 9
6.6 Removal of the test load 10
6.7 Recovery 10
6.8 Final examination and performance check 10
6.9 Final visual inspection 10
7 Severity 10
8 Details to be specified 13
Bibliography 15

Figure 1 – An example of DUT configuration of retention test 8

Table 1 – Recommended test severities for connectors, FMC, passive components, splices, and FMS 11
Table 2 – Recommended test severities for wall outlets, boxes, OFDM, and closures 12
Table 3 – Recommended test severities for hardened connectors, street cabinets, boxes, and closures 13

Documents
Document Sharing Hub
Full document details: IEC 61300-2-4-2020

© IEC 2020

INTERNATIONAL ELECTROTECHNICAL COMMISSION

FIBRE OPTIC INTERCONNECTING DEVICES AND PASSIVE COMPONENTS – BASIC TEST AND MEASUREMENT PROCEDURES –

Part 2-4: Tests – Fibre or cable retention

FOREWORD

1) The International Electrotechnical Commission (IEC) is a worldwide organization for standardization comprising all national electrotechnical committees (IEC National Committees). The object of IEC is to promote international co-operation on all questions concerning standardization in the electrical and electronic fields. To this end and in addition to other activities, IEC publishes International Standards, Technical Specifications, Technical Reports, Publicly Available Specifications (PAS) and Guides (hereafter referred to as "IEC Publication(s)"). Their preparation is entrusted to technical committees; any IEC National Committee interested in the subject dealt with may participate in this preparatory work. International, governmental and non-governmental organizations liaising with the IEC also participate in this preparation. IEC collaborates closely with the International Organization for Standardization (ISO) in accordance with conditions determined by agreement between the two organizations.
2) The formal decisions or agreements of IEC on technical matters express, as nearly as possible, an international consensus of opinion on the relevant subjects since each technical committee has representation from all interested IEC National Committees.
3) IEC Publications have the form of recommendations for international use and are accepted by IEC National Committees in that sense. While all reasonable efforts are made to ensure that the technical content of IEC Publications is accurate, IEC cannot be held responsible for the way in which they are used or for any misinterpretation by any end user.
4) In order to promote international uniformity, IEC National Committees undertake to apply IEC Publications transparently to the maximum extent possible in their national and regional publications. Any divergence between any IEC Publication and the corresponding national or regional publication shall be clearly indicated in the latter.
5) IEC itself does not provide any attestation of conformity. Independent certification bodies provide conformity assessment services and, in some areas, access to IEC marks of conformity. IEC is not responsible for any services carried out by independent certification bodies.
6) All users should ensure that they have the latest edition of this publication.
7) No liability shall attach to IEC or its directors, employees, servants or agents including individual experts and members of its technical committees and IEC National Committees for any personal injury, property damage or other damage of any nature whatsoever, whether direct or indirect, or for costs (including legal fees) and expenses arising out of the publication, use of, or reliance upon, this IEC Publication or any other IEC Publications.
8) Attention is drawn to the Normative references cited in this publication. Use of the referenced publications is indispensable for the correct application of this publication.
9) Attention is drawn to the possibility that some of the elements of this IEC Publication may be the subject of patent rights. IEC shall not be held responsible for identifying any or all such patent rights.

DISCLAIMER
This Consolidated version is not an official IEC Standard and has been prepared for user convenience. Only the current versions of the standard and its amendment(s) are to be considered the official documents.

This Consolidated version of IEC 61300-2-4 bears the edition number 2.1. It consists of the second edition (2019-01) [documents 86B/4147/FDIS and 86B/4160/RVD] and its amendment 1 (2020-01) [documents 86B/4210/CDV and 86B/4237/RVC]. The technical content is identical to the base edition and its amendment.

In this Redline version, a vertical line in the margin shows where the technical content is modified by amendment 1. Additions are in green text, deletions are in strikethrough

AVA Documents
Document Sharing Hub

Full document details: IEC 61300-2-4-2020

red text. A separate Final version with all changes accepted is available in this publication.

International Standard IEC 61300-2-4 has been prepared by subcommittee 86B: Fibre optic interconnecting devices and passive components, of IEC technical committee 86: Fibre optics.

This second edition includes the following significant technical changes with respect to the previous edition:

a) addition of Clause 2, Normative references;

b) clarification of the test procedures;

c) clarification of the severities;

d) modification of the whole document structure according to the latest ISO/IEC Directives.

This document has been drafted in accordance with the ISO/IEC Directives, Part 2.

A list of all parts in the IEC 61300-2 series, published under the general title *Fibre optic interconnecting devices and passive components – Basic test and measurement procedures – Tests*, can be found on the IEC website.

The committee has decided that the contents of the base publication and its amendment will remain unchanged until the stability date indicated on the IEC web site under "http://webstore.iec.ch" in the data related to the specific publication. At this date, the publication will be

- reconfirmed,
- withdrawn,
- replaced by a revised edition, or
- amended.

IMPORTANT – The 'colour inside' logo on the cover page of this publication indicates that it contains colours which are considered to be useful for the correct understanding of its contents. Users should therefore print this document using a colour printer.

Documents
Document Sharing Hub

Full document details: IEC 61300-2-4-2020

© IEC 2020

FIBRE OPTIC INTERCONNECTING DEVICES AND PASSIVE COMPONENTS – BASIC TEST AND MEASUREMENT PROCEDURES –

Part 2-4: Tests – Fibre or cable retention

1 Scope

The purpose of this part of IEC 61300 is to ensure that the retention or attachment of the fibre, cord or cable in a fibre optic device or an enclosure will withstand tensile loads likely to be applied during normal service.

2 Normative references

The following documents are referred to in the text in such a way that some or all of their content constitutes requirements of this document. For dated references, only the edition cited applies. For undated references, the latest edition of the referenced document (including any amendments) applies.

IEC 61300-1, *Fibre optic interconnecting devices and passives components – Basic test and measurement procedures – Part 1: General and guidance*

IEC 61300-2-38, *Fibre optic interconnecting devices and passive components – Basic test and measurement procedures – Part 2-38: Tests – Sealing for pressurized fibre optic closures*

IEC 61300-3-1, *Fibre optic interconnecting devices and passive components – Basic test and measurement procedures – Part 3-1: Examinations and measurements – Visual examination*

IEC 61300-3-3, *Fibre optic interconnecting devices and passive components – Basic test and measurement procedures – Part 3-3: Examinations and measurements – Active monitoring of changes in attenuation and return loss*

IEC 61300-3-4, *Fibre optic interconnecting devices and passive components – Basic test and measurement procedures – Part 3-4: Examinations and measurements – Attenuation*

IEC 61300-3-6, *Fibre optic interconnecting devices and passive components – Basic test and measurement procedures – Part 3-6: Examinations and measurements – Return loss*

IEC 61300-3-28, *Fibre optic interconnecting devices and passive components – Basic test and measurement procedures – Part 3-28: Examinations and measurements – Transient loss*

3 Terms and definitions

No terms and definitions are listed in this document.

ISO and IEC maintain terminological databases for use in standardization at the following addresses:

- IEC Electropedia: available at http://www.electropedia.org/
- ISO Online browsing platform: available at http://www.iso.org/obp

Documents
Document Sharing Hub

Full document details: IEC 61300-2-4-2020

4 General description

The device under test (DUT) is rigidly clamped to a holding fixture, which is shown in Figure 1, and a tensile load is applied to the fibre, cord or cable. Potential failure modes for this test include, but are not limited to:

a) cable sheath damage;

b) strength member damage;

c) fibre breakage or damage;

d) cable clamp failure;

e) cable pull-out;

f) loss of optical continuity or loss of sealing of enclosures;

g) change in optical characteristics, such as attenuation or return loss;

h) breaking, excessive movement or damage to the cable sheath, seals, cable clamps.

5 Apparatus

5.1 Mandrel

~~The diameter D of the mandrel is equal to the greater of 60 mm or 25 times the diameter d of the fibre, cord or cable. Use an adequate number of turns to prevent slippage. For optical components, the distance A between the rearmost portion of the cable fixing component of the DUT and the mandrel tangent point shall be 200 mm ± 50 mm. For closures, the distance A shall be the greater of 50 times the diameter d of the fibre, cord or cable or 250 mm.~~

The minimum diameter D of the mandrel in Figure 1 shall be the greater of 60 mm or the specified minimum bending diameter of the fibre, cord or cable. Sufficient turns shall be used to prevent slippage. For optical components, the distance A between the rearmost portion of the cable fixing component of the DUT and the mandrel tangent point shall be between 200 mm and 300 mm. For closures, the minimum distance A shall be the greater of 400 mm or 50 times the diameter d of the cord or cable.

Documents
Document Sharing Hub
Full document details: IEC 61300-2-4-2020

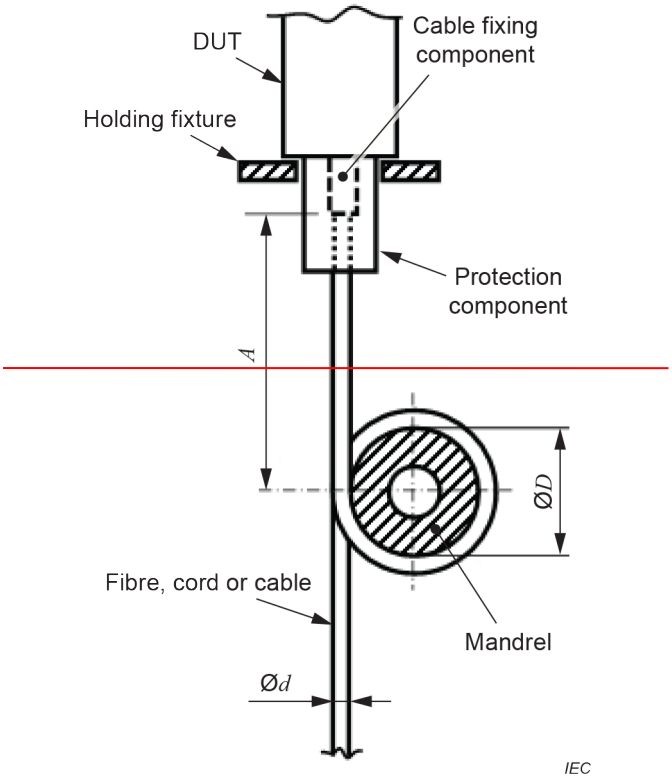

~~**Key**~~

~~$D \geq 25\ d$ or 60 mm (min.)~~

~~Components:~~

~~A = 200 mm ± 50 mm~~

~~Closures:~~

~~$A \geq 50\ d$ or 250 mm (min.)~~

Documents
Document Sharing Hub
Full document details: IEC 61300-2-4-2020

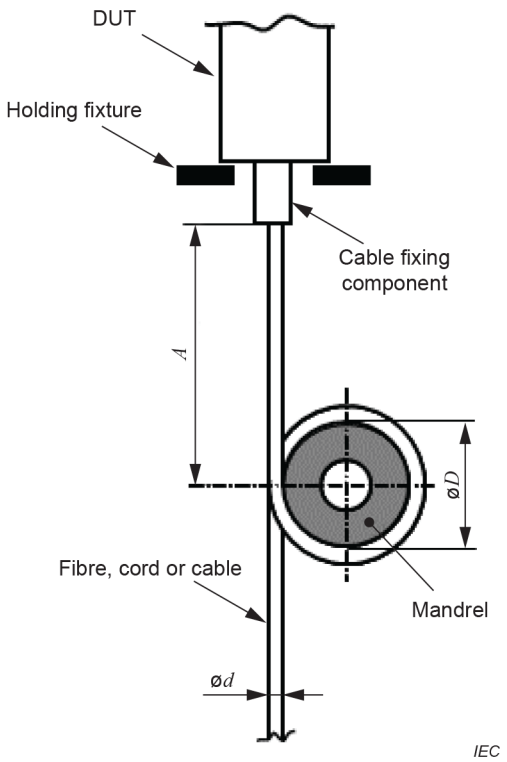

Key

$D \geq$ 60 mm or specified minimum bending diameter of the fibre, cord or cable

Components: $A \geq$ 200 mm and $\leq$ 300 mm

Closures: $A \geq$ 400 mm or $A \geq$ 50 d

Figure 1 – An example of DUT configuration of retention test

5.2 Holding fixture

The holding fixture holds the DUT and its mandrel in positions which are shown in Figure 1 for the duration of the test. The holding method used shall not distort the DUT. Mount the DUT in a fixed position. The holding fixture should allow the DUT to be connected to an optical source and detector in order to monitor changes in attenuation if required by the relevant specification.

5.3 Force generator

The force generator shall smoothly apply the specified force at the specified rate to the DUT.

5.4 Force gauge

The force gauge shall register the amount of force being exerted between the DUT and the fibre, cord or cable. This equipment may include a device to record the rate of force application or the total time the force is applied or both.

5.5 Alternative apparatus

Other apparatus may be used in lieu of a tensile test machine and a force indicator. For example, the required force may be achieved by applying controlled increments of mass to the mandrel.

Documents
Document Sharing Hub
Full document details: IEC 61300-2-4-2020

5.6 Timer

A device to measure the total time while the force is applied.

5.7 Measurement equipment

Optical, sealing and other examination and measuring equipment shall be available as required by IEC 61300-2-38, IEC 61300-3-1, IEC 61300-3-3, IEC 61300-3-4, IEC 61300-3-6 or IEC 61300-3-28 as appropriate. Refer to the required procedure for details.

6 Procedure

6.1 Preparation of DUTs

Prepare the DUTs in accordance with the manufacturer's instructions or as specified in the relevant specification. DUTs shall be terminated with a sufficient length of fibre cable to facilitate interfacing with the optical source and detector.

6.2 Pre-conditioning

Pre-condition each DUT for 2 h for connectors, splices, passive components and fibre management systems, or for 4 h for closures at the standard atmospheric condition defined in IEC 61300-1.

6.3 Mounting DUT and visual inspection of the mounted DUT

Securely mount the DUT and its mandrel on the holding fixtures and place in the test apparatus.

Visually examine each DUT in accordance with IEC 61300-3-1 to ensure that the DUT has not been damaged by inserting it into the test equipment.

6.4 Initial examination

Visually examine each DUT in accordance with IEC 61300-3-1. Complete the initial examinations and measurements on the DUT as required by the relevant specification.

For the sealing performance of category S closures, the closure shall be pressurized at the test temperature. The pressure will be measured at the test temperature in accordance with test method B of IEC 61300-2-38.

For the optical evaluation, the variation of the attenuation shall be measured in accordance with IEC 61300-3-3 or IEC 61300-3-28. If required, the attenuation will be measured in accordance with IEC 61300-3-4.

6.5 Conditioning and optical measurement during the conditioning

Activate the test apparatus so that an axial force is gradually exerted between the DUT and the mandrel. Apply the load smoothly so as to eliminate any impulse or impact loading effect. If automatic equipment is used, it is recommended that the load change of the DUT be 5 N/s for reinforced cable and 0,5 N/s for secondary and primary coated fibre, unless otherwise specified in the relevant specification. Continue loading until the tensile load specified in the relevant specification has been reached.

Maintain the specified load for the specified time period required by the relevant performance specification.

Documents
Document Sharing Hub
Full document details: IEC 61300-2-4-2020

While the DUT is under load, make observations and perform optical measurements when required by the relevant performance specification.

If required by the relevant specification, measure the change of attenuation in accordance with IEC 61300-3-3 or IEC 61300-3-28 ~~before, during and after the load is applied~~.

6.6 Removal of the test load

Remove the test load from the DUT.

For a category S closure, the pressure will be measured at the test temperature in accordance with test method B of IEC 61300-2-38 before and after applying the load.

6.7 Recovery

Remove the DUT from the test apparatus and allow the DUT to recover under standard atmospheric condition for 2 h for connectors, splices, passive components and fibre management systems or for 4 h for closures, as defined in IEC 61300-1, unless otherwise specified in the relevant specification.

6.8 Final examination and performance check

On completion of the test, perform the final measurements, as defined in the relevant specification. The results of the final measurement shall be within the limit established in the relevant specification.

For the sealing test of the DUTs, such as closures, the final sealing performance shall be checked in accordance with test method A of IEC 61300-2-38.

For the optical evaluation of DUTs, the variation of the attenuation shall be measured in accordance with IEC 61300-3-3 or IEC 61300-3-28. If required, the attenuation will be measured in accordance with IEC 61300-3-4.

6.9 Final visual inspection

Visually examine the DUT in accordance with IEC 61300-3-1. Check for evidence of any degradation in the DUT. This may include, for example:

- broken, loose or damaged parts or accessories, and
- excessive movement of, damage to, or broken cable sheath, seals, or cable clamps.

Repeat the procedure at another test temperature if required.

7 Severity

The severity consists of the test temperature, the magnitude of the tensile load and the time for which it is applied. Recommended severities for connectors, FMCs (Field Mountable Connector), passive components, splices and FMS (Fibre Management Systems) are given in Table 1. Recommended severities for wall outlets, boxes, OFDM and closures of category C are listed in Table 2. Recommended severities for hardened connectors, street cabinets, boxes and closures of category S, G and A are shown in Table 3.

In the columns of Tables 1, 2 and 3, the required acceptance criteria S, O and/or V are listed for each product:

S: Sealing acceptance criteria;

O: Optical acceptance criteria;

Documents
Document Sharing Hub

Full document details: IEC 61300-2-4-2020

V: Visual inspection acceptance criteria.

The test severities marked with a blank cell are not relevant for the selected product.

Table 1 – Recommended test severities for connectors, FMC, passive components, splices, and FMS

Categories	Severity	Connectors	FMC	Passive components	Splices	FMS
C, C^{HD}	Load: 50 N for 60 s for cables with aramid yarn strength members 10 N for 60 s for tubes or cables without aramid yarn strength members 5,0 N for 60 s for buffered fibres 2,0 N for 60 s for primary coated fibres	O,V	O,V		O,V	
	Load: 10 N for 60 s for cables 5,0 N for 60 s for buffered fibres 2,0 N for 60 s for primary coated fibres			O,V		
	Load: 10 N for 60 s for cables 5,0 N for 60 s for cable elements and tubes					O,V [a]
OP, OP^{HD}, OP+, $OP+^{HD}$	Load: 70 N for 60 s for cables with aramid yarn strength members 10 N for 60 s for tubes or cables without aramid yarn strength members 5,0 N for 60 s for buffered fibres 2,0 N for 60 s for primary coated fibres	O,V	O,V		O,V	
	Load: 10 N for 60 s for cables 5,0 N for 60 s for buffered fibres 2,0 N for 60 s for primary coated fibres			O,V		
	Load: 10 N for 60 s for cables 5,0 N for 60 s for cable elements or tubes					O,V [a]
I, I^{HD}	Load: 100 N for 120 s on cable	O,V		(O,V) [b]		
E	Load: 100 N for 60 s for cables with diameter, $d > 2$ mm 70 N for 60 s for cables with diameter, $d \leq 2$ mm 5,0 N for 60 s for buffered fibres 2,0 N for 60 s for primary coated fibres	O,V				
	Load: 10 N for 60 s for cables 5,0 N for 60 s for buffered fibres 2,0 N for 60 s for primary coated fibres			(O,V) [b]		

NOTE 1 Categories are defined in IEC 61753-1.

NOTE 2 For ribbon fibres, the severities should be the same as for secondary coated fibres.

NOTE 3 For non-round duplex cords and flat cables, the smaller diameter is used to define the severities.

[a] If cables or cable elements (loose tubes) are not fixed to the entry ports of the fibre management system, the test shall not be performed.

[b] These tests shall be applicable to passive optical components that incorporate fibre or fibre cable pigtails in their product design.

AVA Documents
Document Sharing Hub

Full document details: IEC 61300-2-4-2020

Table 2 – Recommended test severities for wall outlets, boxes, OFDM, and closures

Categories	Severity	Wall outlet	Boxes	OFDM	Closures
C	Load: 25 N on cables or cords 60 s load duration per cable/cord Test conducted at +23 °C ± 3 °C	S,O,V	S,O,V	O,V	
	Load on cable (N): 10 x cable diameter (mm) 1 h load duration per cable Test conducted at +23 °C ± 3 °C				S,O,
NOTE 1 Categories are defined in IEC 61753-1. NOTE 2 For non-round duplex cords and flat cables, the smaller diameter is used to define the severities. NOTE 3 Separate test samples for sealing performance and optical performance evaluation may be used.					

Documents
Document Sharing Hub
Full document details: IEC 61300-2-4-2020

Table 3 – Recommended test severities for hardened connectors, street cabinets, boxes, and closures

Categories	Severity	Hardened connectors	Street cabinets	Boxes	Closures
A	Load (N): 20 × cable diameter (mm) 1 h load duration per cable per test temperature Sealing test [a] conducted at test temperatures −15 °C and +45 °C Optical test [a] conducted at +23 °C ± 3 °C	S,O,V	V [b]		S,O,V
	Load (N): 10 × cable diameter (mm) for 1 h per feeder cable per test temperature 25 N for 60 s per cord and work area cable and per temperature Sealing test [a] conducted at test temperatures −15°C and +45°C Optical test [a] conducted at +23°C ± 3°C			S, O, V	
G	Load (N): 20 × cable diameter (mm) 1 h load duration per cable per test temperature. Sealing test [c] conducted at −15 °C ± 2 °C and +.45 °C ± 2 °C Optical test [c] conducted at +23 °C ± 3 °C	S,O,V			S,O, V
S	Load (N): 20 × cable diameter (mm) Duration: 1 h per cable at test temperature Sealing test [c] conducted at −15 °C ± 2 °C and +45 °C ± 2 °C Optical test [c] conducted at +23 °C ± 3 °C	S,O,V			S,O, V

NOTE 1 Categories are defined in IEC 61753-1.

NOTE 2 For non-round duplex cords and flat cables, the smaller diameter is used to define the severities.

[a] Separate test samples for hardened connector/closure sealing performance and optical evaluation may be used.

[b] Test only required when product is pre-cabled and cable handling is expected when unpacking and installing the product.

[c] Separate test samples for sealing performance and optical performance evaluation may be used.

8 Details to be specified

The following details, as applicable, shall be specified in the relevant specification:

- quantity and description of samples required for test;
- magnitude, direction, and rate of application of the tensile load;
- position of clamping of the fibre, cord or cable;
- duration of the load;
- pre-conditioning procedure;
- recovery procedure;
- method of holding;
- DUT functioning or non-functioning;
- initial inspection and measurements;
- examinations and measurements during test and performance requirements;

Documents
Document Sharing Hub
Full document details: IEC 61300-2-4-2020

- final inspection and measurements;
- optical measurement method, if necessary;
- sealing test method, if necessary;
- deviations from test procedure;
- additional pass/fail criteria.

Documents
Document Sharing Hub

Full document details: IEC 61300-2-4-2020

Bibliography

IEC 61753-1, *Fibre optic interconnecting devices and passive components – Performance standard – Part 1: General and guidance*

Documents
Document Sharing Hub

Full document details: IEC 61300-2-4-2020

SOMMAIRE

AVANT-PROPOS 17
1 Domaine d'application 19
2 Références normatives 19
3 Termes et définitions 19
4 Description générale 20
5 Appareillage 20
5.1 Mandrin 20
5.2 Dispositif de rétention 22
5.3 Générateur de force 22
5.4 Dynamomètre 22
5.5 Appareillage en variante 22
5.6 Temporisateur 23
5.7 Matériel de mesure 23
6 Procédure 23
6.1 Préparation des DUT 23
6.2 Préconditionnement 23
6.3 Fixation du DUT et examen visuel du DUT fixé 23
6.4 Examen initial 23
6.5 Conditionnement et mesure optique pendant le conditionnement 23
6.6 Retrait de la charge d'essai 24
6.7 Rétablissement 24
6.8 Examen final et contrôle de performance 24
6.9 Examen visuel final 24
7 Sévérité 24
8 Détails à spécifier 27
Bibliographie 29

Figure 1 – Exemple de configuration de DUT pour l'essai de rétention 22

Tableau 1 – Sévérités d'essai recommandées pour les connecteurs, les FMC, les organes passifs, les épissures et les FMS 25
Tableau 2 – Sévérités d'essai recommandées pour les prises murales, les coffrets, les dispositifs OFDM et les boîtiers 26
Tableau 3 – Sévérités d'essai recommandées pour les connecteurs renforcés, les armoires d'environnement urbain, les coffrets et les boîtiers 27

Documents
Document Sharing Hub
Full document details: IEC 61300-2-4-2020