IEC 61300-3-2

Edition 3.0 2009-01

INTERNATIONAL STANDARD

NORME INTERNATIONALE

colour inside

Fibre optic interconnecting devices and passive components – Basic test and measurement procedures –
Part 3-2: Examination and measurements – Polarization dependent loss in a single-mode fibre optic device

Dispositifs d'interconnexion et composants passifs à fibres optiques – Procédures fondamentales d'essais et de mesures –
Partie 3-2: Examen et mesures – Perte en fonction de la polarisation dans un dispositif pour fibres optiques unimodales

IEC 61300-3-2:2009

AVA Documents
Document Sharing Hub

Full document details: IEC 61300-3-2 2009

THIS PUBLICATION IS COPYRIGHT PROTECTED

Copyright © 2009 IEC, Geneva, Switzerland

All rights reserved. Unless otherwise specified, no part of this publication may be reproduced or utilized in any form or by any means, electronic or mechanical, including photocopying and microfilm, without permission in writing from either IEC or IEC's member National Committee in the country of the requester.
If you have any questions about IEC copyright or have an enquiry about obtaining additional rights to this publication, please contact the address below or your local IEC member National Committee for further information.

Droits de reproduction réservés. Sauf indication contraire, aucune partie de cette publication ne peut être reproduite ni utilisée sous quelque forme que ce soit et par aucun procédé, électronique ou mécanique, y compris la photocopie et les microfilms, sans l'accord écrit de la CEI ou du Comité national de la CEI du pays du demandeur.
Si vous avez des questions sur le copyright de la CEI ou si vous désirez obtenir des droits supplémentaires sur cette publication, utilisez les coordonnées ci-après ou contactez le Comité national de la CEI de votre pays de résidence.

IEC Central Office
3, rue de Varembé
CH-1211 Geneva 20
Switzerland

Tel.: +41 22 919 02 11
Fax: +41 22 919 03 00
info@iec.ch
www.iec.ch

About the IEC

The International Electrotechnical Commission (IEC) is the leading global organization that prepares and publishes International Standards for all electrical, electronic and related technologies.

About IEC publications

The technical content of IEC publications is kept under constant review by the IEC. Please make sure that you have the latest edition, a corrigenda or an amendment might have been published.

Useful links:

IEC publications search - www.iec.ch/searchpub

The advanced search enables you to find IEC publications by a variety of criteria (reference number, text, technical committee,…).
It also gives information on projects, replaced and withdrawn publications.

IEC Just Published - webstore.iec.ch/justpublished

Stay up to date on all new IEC publications. Just Published details all new publications released. Available on-line and also once a month by email.

Electropedia - www.electropedia.org

The world's leading online dictionary of electronic and electrical terms containing more than 30 000 terms and definitions in English and French, with equivalent terms in additional languages. Also known as the International Electrotechnical Vocabulary (IEV) on-line.

Customer Service Centre - webstore.iec.ch/csc

If you wish to give us your feedback on this publication or need further assistance, please contact the Customer Service Centre: csc@iec.ch.

A propos de la CEI

La Commission Electrotechnique Internationale (CEI) est la première organisation mondiale qui élabore et publie des Normes internationales pour tout ce qui a trait à l'électricité, à l'électronique et aux technologies apparentées.

A propos des publications CEI

Le contenu technique des publications de la CEI est constamment revu. Veuillez vous assurer que vous possédez l'édition la plus récente, un corrigendum ou amendement peut avoir été publié.

Liens utiles:

Recherche de publications CEI - www.iec.ch/searchpub

La recherche avancée vous permet de trouver des publications CEI en utilisant différents critères (numéro de référence, texte, comité d'études,…).
Elle donne aussi des informations sur les projets et les publications remplacées ou retirées.

Just Published CEI - webstore.iec.ch/justpublished

Restez informé sur les nouvelles publications de la CEI. Just Published détaille les nouvelles publications parues. Disponible en ligne et aussi une fois par mois par email.

Electropedia - www.electropedia.org

Le premier dictionnaire en ligne au monde de termes électroniques et électriques. Il contient plus de 30 000 termes et définitions en anglais et en français, ainsi que les termes équivalents dans les langues additionnelles. Egalement appelé Vocabulaire Electrotechnique International (VEI) en ligne.

Service Clients - webstore.iec.ch/csc

Si vous désirez nous donner des commentaires sur cette publication ou si vous avez des questions contactez-nous: csc@iec.ch.

Documents
Document Sharing Hub

Full document details: IEC 61300-3-2 2009

IEC 61300-3-2

Edition 3.0 2009-01

INTERNATIONAL STANDARD

NORME INTERNATIONALE

colour inside

Fibre optic interconnecting devices and passive components – Basic test and measurement procedures – Part 3-2: Examination and measurements – Polarization dependent loss in a single-mode fibre optic device

Dispositifs d'interconnexion et composants passifs à fibres optiques – Procédures fondamentales d'essais et de mesures – Partie 3-2: Examen et mesures – Perte en fonction de la polarisation dans un dispositif pour fibres optiques unimodales

INTERNATIONAL ELECTROTECHNICAL COMMISSION

COMMISSION ELECTROTECHNIQUE INTERNATIONALE

PRICE CODE
CODE PRIX P

ICS 33.180.20

ISBN 978-2-8322-0928-8

Warning! Make sure that you obtained this publication from an authorized distributor.
Attention! Veuillez vous assurer que vous avez obtenu cette publication via un distributeur agréé.

AVA Documents
Document Sharing Hub

® Registered trademark of the International Electrotechnical Commission
Marque déposée de la Commission Electrotechnique Internationale

Full document details: IEC 61300-3-2 2009

CONTENTS

FOREWORD ... 3
1 Scope and object ... 5
2 Normative references ... 5
3 Measurement methods ... 5
3.1 All states method ... 5
3.2 Mueller matrix method ... 6
4 Apparatus ... 7
4.1 Optical source (S) ... 7
4.2 Temporary joint (TJ) ... 7
4.3 Polarization state change system (PSCS) ... 8
4.3.1 All states method ... 8
4.3.2 Mueller matrix method ... 9
4.4 Reference branching device (RBD) (optional) ... 9
4.5 Detectors (D) ... 9
4.6 Data read-out / recording / processing devices ... 10
5 Procedure ... 10
5.1 Preparation of specimens ... 10
5.2 Pre-conditioning ... 10
5.3 Initial measurements ... 10
5.4 Test precautions ... 10
5.5 Reference measurement ... 10
5.6 Device measurement ... 11
6 Data analysis ... 12
6.1 All states method ... 12
6.2 Mueller matrix method ... 13
7 Details to be specified ... 14
Annex A (informative) Measurement uncertainties ... 15

Figure 1 – Polarization mapping of deterministic and pseudo-random techniques ... 6
Figure 2 – Measurement apparatus ... 7
Figure 3 – Examples of PSCS for the all states method (deterministic and random) ... 8
Figure 4 – Polarization state change system (example) ... 9
Figure 5 – Reference measurement apparatus ... 11
Figure A.1 – All states apparatus uncertainty (example: see text for details) ... 15
Figure A.2 – Alternate apparatus for Mueller Matrix ... 16

Documents
Document Sharing Hub

Full document details: IEC 61300-3-2 2009

INTERNATIONAL ELECTROTECHNICAL COMMISSION

FIBRE OPTIC INTERCONNECTING DEVICES AND PASSIVE COMPONENTS – BASIC TEST AND MEASUREMENT PROCEDURES –

Part 3-2: Examination and measurements – Polarization dependent loss in a single-mode fibre optic device

FOREWORD

1) The International Electrotechnical Commission (IEC) is a worldwide organization for standardization comprising all national electrotechnical committees (IEC National Committees). The object of IEC is to promote international co-operation on all questions concerning standardization in the electrical and electronic fields. To this end and in addition to other activities, IEC publishes International Standards, Technical Specifications, Technical Reports, Publicly Available Specifications (PAS) and Guides (hereafter referred to as "IEC Publication(s)"). Their preparation is entrusted to technical committees; any IEC National Committee interested in the subject dealt with may participate in this preparatory work. International, governmental and non-governmental organizations liaising with the IEC also participate in this preparation. IEC collaborates closely with the International Organization for Standardization (ISO) in accordance with conditions determined by agreement between the two organizations.
2) The formal decisions or agreements of IEC on technical matters express, as nearly as possible, an international consensus of opinion on the relevant subjects since each technical committee has representation from all interested IEC National Committees.
3) IEC Publications have the form of recommendations for international use and are accepted by IEC National Committees in that sense. While all reasonable efforts are made to ensure that the technical content of IEC Publications is accurate, IEC cannot be held responsible for the way in which they are used or for any misinterpretation by any end user.
4) In order to promote international uniformity, IEC National Committees undertake to apply IEC Publications transparently to the maximum extent possible in their national and regional publications. Any divergence between any IEC Publication and the corresponding national or regional publication shall be clearly indicated in the latter.
5) IEC provides no marking procedure to indicate its approval and cannot be rendered responsible for any equipment declared to be in conformity with an IEC Publication.
6) All users should ensure that they have the latest edition of this publication.
7) No liability shall attach to IEC or its directors, employees, servants or agents including individual experts and members of its technical committees and IEC National Committees for any personal injury, property damage or other damage of any nature whatsoever, whether direct or indirect, or for costs (including legal fees) and expenses arising out of the publication, use of, or reliance upon, this IEC Publication or any other IEC Publications.
8) Attention is drawn to the Normative references cited in this publication. Use of the referenced publications is indispensable for the correct application of this publication.
9) Attention is drawn to the possibility that some of the elements of this IEC Publication may be the subject of patent rights. IEC shall not be held responsible for identifying any or all such patent rights.

International Standard IEC 61300-3-2 has been prepared by subcommittee 86B: Fibre optic interconnecting devices and passive components, of IEC technical committee 86: Fibre optics.

This third edition cancels and replaces the second edition published in 1999. It constitutes a technical revision.

The main changes with respect to the previous edition are listed below:

- This edition includes both the all-states method of the previous edition as well as the Mueller matrix method from IEC 61300-3-12.

AVA Documents
Document Sharing Hub

Full document details: IEC 61300-3-2 2009

This bilingual version (2013-07) corresponds to the monolingual English version, published in 2009-01.

The text of this standard is based on the following documents:

FDIS	Report on voting
86B/2783/FDIS	86B/2811/RVD

Full information on the voting for the approval of this standard can be found in the report on voting indicated in the above table.

The French version of this standard has not been voted upon.

A list of all parts of IEC 61300 series, published under the general title *Fibre optic interconnecting devices and passive components – Basic test and measurement procedures,* can be found on the IEC website.

This publication has been drafted in accordance with the ISO/IEC Directives, Part 2.

The committee has decided that the contents of this publication will remain unchanged until the maintenance result date indicated on the IEC web site under "http://webstore.iec.ch" in the data related to the specific publication. At this date, the publication will be

- reconfirmed,
- withdrawn,
- replaced by a revised edition, or
- amended.

IMPORTANT – The 'colour inside' logo on the cover page of this publication indicates that it contains colours which are considered to be useful for the correct understanding of its contents. Users should therefore print this document using a colour printer.

Documents
Document Sharing Hub

Full document details: IEC 61300-3-2 2009

FIBRE OPTIC INTERCONNECTING DEVICES AND PASSIVE COMPONENTS – BASIC TEST AND MEASUREMENT PROCEDURES –

Part 3-2: Examination and measurements – Polarization dependent loss in a single-mode fibre optic device

1 Scope

This part of IEC 61300 specifies measurement methods to determine the dependence of loss in a single-mode fibre optic device to changes in polarization. This procedure focuses on measurements with a fixed wavelength source; therefore, this procedure is applicable to devices whose properties at a single wavelength can represent those over the broader wavelength band. Typical examples of such devices are single-mode interconnecting devices and passive components, including connectors, splices, branching devices, attenuators, isolators, and switches. The maximum observed variation in transmission loss is referred to as polarization-dependent-loss (PDL).

This standard applies to broadband devices and not to narrow-band devices like filters and multiplexers. The reader is referred to IEC 61300-3-29 for such measurements.

2 Normative references

The following referenced documents are indispensable for the application of this document. For dated references, only the edition cited applies. For undated references, the latest edition of the referenced document (including any amendments) applies.

IEC 61300-3-29, *Fibre optic interconnecting devices and passive components – Basic test and measurement procedures – Part 3-29: Examinations and measurements – Measurement techniques for characterising the amplitude of the spectral transfer function of DWDM components*

3 Measurement methods

Two methods for measuring polarization-dependent-loss are described. The all states method determines the maximum variation in transmission loss by stimulating with a representative set of all possible polarization states including linear, circular, and elliptical. The Mueller matrix method determines the sensitivity using a set of fixed states and applying the Mueller matrix mathematical analysis.

This procedure originally consisted of only one method, but has been updated to incorporate the technique previously described by IEC 61300-3-12[1]. That standard will be discontinued.

3.1 All states method

In this method, the PDL is determined by rotating the source polarization over a representative set of all possible polarization states while monitoring the transmission

[1] IEC 61300-3-12, *Fibre optic interconnecting devices and passive components – Basic test and measurement procedures – Part 3-12:Examinations and measurements – Polarization dependence of attenuation of a single-mode fibre optic component: Matrix calculation method*

AVA Documents Document Sharing Hub

Full document details: IEC 61300-3-2 2009

response of the device using a power meter. The rotation can be accomplished in either a deterministic or a pseudo-random fashion.

The term “deterministic” refers to techniques that scan a large subset of the entire polarization state space in a repeatable way. This method scans the Poincaré sphere along predetermined trajectories to produce a good approximation of full sphere coverage.

The term “pseudo-random” refers to techniques that scan the polarization through a pseudo-random variation of retardance in the optical path, usually using the distributed retardance of optical fibre loops in motion.

Figure 1 shows the difference in coverage between the two techniques. In either case, the accuracy of the method is dependent on the degree of coverage over the Poincaré sphere due to the combination of the states generated by the polarization controller and the response time of the power detector with respect to the polarization scan rate.

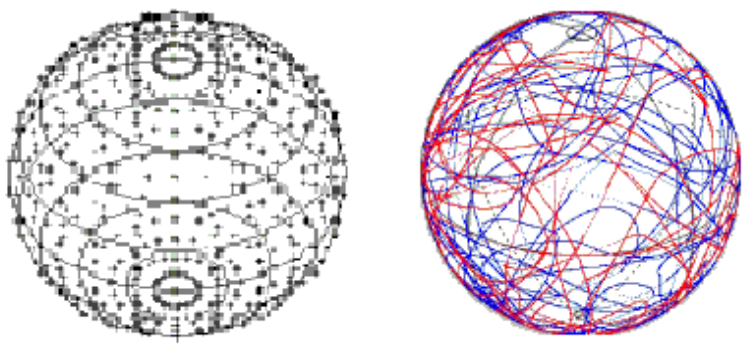

IEC 2363/08

Figure 1 – Polarization mapping of deterministic and pseudo-random techniques

3.2 Mueller matrix method

The Mueller matrix method involves the measurement of the behaviour of a device under test, DUT, when illuminated by a small set of well-defined states of polarization of input light. These measurements are followed by a matrix calculation to determine the PDL of the DUT. Generally, there are two matrix formalisms that can describe and quantify the polarization behaviour of light based on Mueller and Jones calculus respectively. For fully polarized light, as required for the PDL measurements, the Mueller and Jones formalisms are equivalent. Since measurements with polarization instrumentation on only one side of the DUT directly obtain the necessary elements of the Mueller matrix, that is elements corresponding to power ratios rather than field amplitude and phase, the test procedure described here uses Mueller mathematics to determine PDL.

The Mueller matrix formalism entails an optical power representation of the performance of components. This matrix is a square 16-element matrix. Here, the state of polarization (SOP) of light is described as a 4-element Stokes vector. The Stokes vector of the incident light multiplied by the Mueller matrix of the DUT gives the Stokes vector of the output light, and this output light may be from transmission, reflection or scattering. In the determination of PDL of a component using Mueller matrices, it is normally not necessary to determine the full Mueller matrix but rather only the first row of the matrix, which provides complete information on light intensity but not on the resultant state of polarization.

The accuracy of the method is dependent on the source wavelength stability, the system signal to noise ratio, and the drift in system birefringence.

Documents
Document Sharing Hub

Full document details: IEC 61300-3-2 2009

4 Apparatus

The basic apparatus for making PDL measurements is shown in Figure 2.

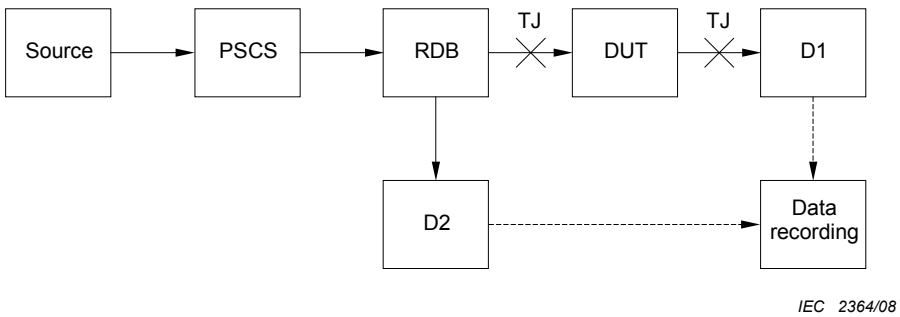

Figure 2 – Measurement apparatus

The apparatus consists of the following devices.

4.1 Optical source (S)

An optical source capable of producing the spectral characteristics defined in the relevant specification (both wavelength and spectral width) shall be used. Unless otherwise specified in the relevant specification, the spectral width shall be appropriate for the degree of wavelength resolution required.

The source power must be capable of meeting the dynamic range requirements of the measurement when combined with the detector sensitivity.

The source must be polarized to at least 13 dB extinction ratio, unless otherwise specified in the relevant specification. An extinction ratio of 20 dB may be used to assure that this parameter makes no significant contribution to the measurement uncertainty. If the source is not already polarized to this level, a polarizer should be used to maintain this extinction ratio over the range of wavelengths of the measurement.

The optical power stability, degree of polarization (DOP), state of polarization (SOP) stability, and wavelength stability of the source shall be sufficient to achieve the desired measurement accuracy over the duration of the measurement. For some applications, a narrow linewidth source such as a single longitudinal mode laser may be used though care shall be exercised to prevent back-reflections that could lead to multi-path interference and resulting spurious PDL.

The output from this source is either via a single-mode fibre or a coupling system capable of launching into a single-mode fibre. Care shall be taken that only the fundamental transverse mode of the fibre is propagating as outlined in Clause 5.

NOTE Multimode lasers may not provide sufficient polarization stability for this measurement.

4.2 Temporary joint (TJ)

This is a method, device, or mechanical fixture for temporarily aligning two fibre ends into a reproducible, low-loss, low-PDL joint. This may be mechanical connectors, mechanical splices, a direct optical launch into the pigtail, or a splice onto the source's pigtail. Typically, a fusion splice is used after the polarization controller since mechanical connections may exhibit some polarization sensitivity if the end-faces are not perpendicular to the fibre axis. The stability and insertion loss of the temporary joint shall be compatible with the required measurement precision and dynamic range, respectively.

Documents
Document Sharing Hub
Full document details: IEC 61300-3-2 2009

4.3 Polarization state change system (PSCS)

The selection of the PSCS will be dependent upon the test method selected.

4.3.1 All states method

For the all states method, the polarization state adjuster is used to vary the polarization of the input signal over the entire Poincaré sphere. This may be done by continually adjusting a quarter-wave/half-wave retarder pair placed in the optical path in a well-defined phase relationship (deterministic) or by using a polarization scrambler (pseudo-random, e.g. consisting of three or more movable fibre loops). Some examples are provided as follows:

– bulk optics elements

  This may be formed by a cascade of three polarization selective optical elements (only two optical elements may be sufficient if the state of polarization before the polarization adjuster is already established by the source). The alignment of the system shall be adequate to ensure the reproducibility of launched power for the same orientation of the optical elements. The example in Figure 3a shows a linear polarizer P, half-wave retardation plate H, and a quarter-wave retardation plate Q mounted on rotation stages and inserted into a collimated optical path.

– in-line all-fibre polarization adjusters

  This may be formed by a cascade of three rotatable mandrels around which single-mode optical fibre is wound. This solution is shown in Figure 3b.

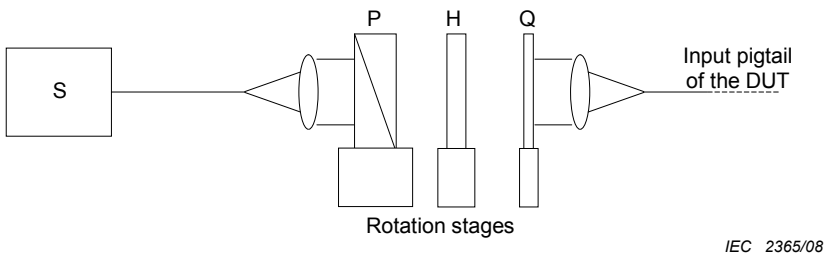

Figure 3a – Bulk optic PSCS

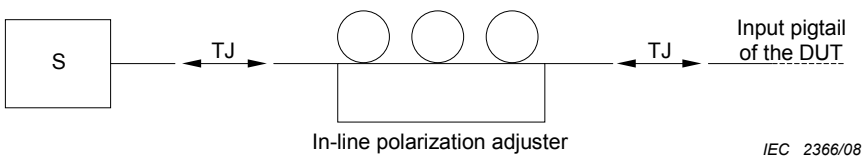

Figure 3b – In-line fibre PSCS

Figure 3 – Examples of PSCS for the all states method (deterministic and random)

The accuracy of the all states method is highly dependent upon the ability of the PSCS and detector combination to sufficiently sample the polarization space and the stability of the PSCS insertion loss as the polarization is varied. Annex A discusses the uncertainty associated with the all states method.

Documents
Document Sharing Hub
Full document details: IEC 61300-3-2 2009

4.3.2 Mueller matrix method

For the Mueller matrix method, the PSCS is the means by which the launch light can be conditioned into several well-defined states of polarization representing linearly independent Stokes vectors. Although any such states can be used, a typical choice is the set of linear horizontal, linear vertical, linear diagonal, and right hand circular. The equations of 6.2 are based on this choice. The required accuracy of determining the four states depends on the required PDL accuracy; as a guideline an accuracy of <+/– 0,5° is proposed. An example of this system is shown in Figure 4.

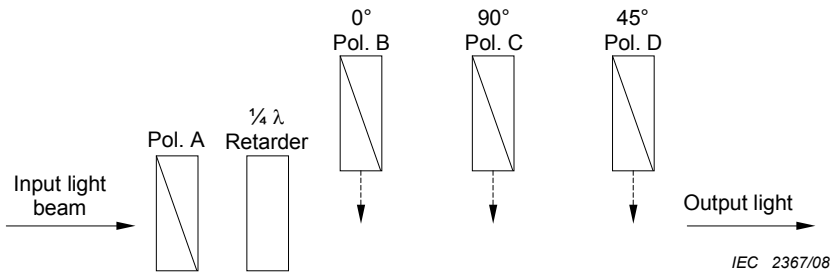

Figure 4 – Polarization state change system (example)

This arrangement can launch four states of polarization consisting of circularly polarized light plus three linearly polarized states oriented at 45° with respect to each other. The input light is first conditioned to a highly linearly polarized state by a polarizer (A). It is then converted to circular polarization by a quarter-wave retarder oriented at 45° to the polarizer. The three linear states of polarization can be created sequentially by sequentially inserting the three polarizers labelled B, C, and D into the beam. Polarizers B, C, and D are oriented at 45° with respect to each other when they are in the beam. The alignment of the system shall be adequate to ensure the reproducibility of launched power for the same orientation of the polarizers.

Other means to reproducibly adjust the state of polarization are permitted, for example using bulk optical elements like in Figure 3a, or using liquid crystal variable retarders or pre-programmed fibre polarization controllers.

4.4 Reference branching device (RBD) (optional)

This is a device that transfers power from the input port to two output ports with approximately a 50:50 or other suitable coupling ratio. The optimum ratio will depend on the signal level available and the power sensitivity of the reference detector. Unless otherwise specified, it shall exhibit less than 10 % of the minimum polarization dependence specified as acceptable. Note that the dynamic range of the measurement will be dependent on the coupling ratio.

The use of the RBD is optional as it is only suggested to use a source power monitor. If the source power is stable to an order of magnitude better than the DUT PDL to be measured, it can be omitted.

4.5 Detectors (D)

All detectors used shall have sufficient dynamic range to make the measurement in conjunction with the rest of the measurement apparatus. The detectors shall have a polarization sensitivity that is an order of magnitude better than the measurement to minimize the error. If required, a depolarizer may be used after the DUT and before the detector to achieve the required accuracy.

The detectors shall be linear over the optical power levels expected to be encountered. Any detector nonlinearity and polarization dependence contributes directly to measurement error. Therefore, it is important that the detector and associated amplification circuits exhibit good

AVA Documents
Document Sharing Hub

linearity over all measurement ranges. Measures shall be taken to ensure that the power density at the detector is always sufficiently below the saturation level of the detector. It is recommended to operate at least 3 dB below the saturation level, defined as the power level at which the relative accuracy specification of the measurement equipment is exceeded. In this case, the amplifier usually contributes the most to nonlinearity, particularly when the transimpedance is changed as the ranges are switched. Measurement of low PDL values can usually be achieved without changing ranges.

The detector(s) shall have sufficient active area and be placed sufficiently close to the output to capture all of the light exiting the output fibre of the DUT.

For the all states method if the polarization is scanned continuously, the detectors shall be able to measure power quickly enough, in relation to the polarization scanning rate, such that the measured values correspond to well resolved states of polarization. This is usually determined by the bandwidth and the averaging time of the detectors.

4.6 Data read-out / recording / processing devices

These provide a means to collect the transmitted power as the state of polarization is scanned, to perform the calculations, and to report the results at the end of the test. A computer-based system may be used to fulfil this data acquisition and analysis function.

5 Procedure

5.1 Preparation of specimens

Prepare and clean the specimen in accordance with the manufacturer's instructions.

5.2 Pre-conditioning

No pre-conditioning is required for this measurement unless otherwise specified in the relevant specification.

5.3 Initial measurements

Complete initial examinations and measurements on the specimen as required by the relevant specification.

5.4 Test precautions

Movement of any of the fibres during the measurement may affect the SOP and lead to measurement error. Therefore, care shall be taken to ensure that no movement of the fibres or apparatus is allowed. This is particularly true for the Mueller matrix method and is generally less of an issue for the all states method.

Cladding modes shall be stripped at the entry and exit ports of each element of the apparatus. If this is not accomplished by the fibre coating, cladding mode strippers are required.

5.5 Reference measurement

Starting with the apparatus as shown in Figure 2, remove the DUT from the set-up as shown in Figure 5. The DUT may be completely removed as shown in the upper setup of Figure 5 or a fibre loop of length equivalent to the length of the pigtails on the device may be substituted as shown in the lower setup of Figure 5. In either case, none of the apparatus test cables should be removed during this step.

Begin with the PSCS set to the first polarization state, and collect the power in watts from D1 and (if used) D2.

Documents
Document Sharing Hub

Full document details: IEC 61300-3-2 2009