IEC 61300-3-4

Edition 4.0 2023-05

INTERNATIONAL STANDARD

NORME INTERNATIONALE

Fibre optic interconnecting devices and passive components – Basic test and measurement procedures – Part 3-4: Examinations and measurements – Attenuation

Dispositifs d'interconnexion et composants passifs fibroniques – Procédures fondamentales d'essais et de mesures – Partie 3-4: Examens et mesures – Affaiblissement

IEC 61300-3-4:2023-05(en-fr)

Documents
Document Sharing Hub

Full document details: IEC 61300-3-4-2023

THIS PUBLICATION IS COPYRIGHT PROTECTED
Copyright © 2023 IEC, Geneva, Switzerland

All rights reserved. Unless otherwise specified, no part of this publication may be reproduced or utilized in any form or by any means, electronic or mechanical, including photocopying and microfilm, without permission in writing from either IEC or IEC's member National Committee in the country of the requester. If you have any questions about IEC copyright or have an enquiry about obtaining additional rights to this publication, please contact the address below or your local IEC member National Committee for further information.

Droits de reproduction réservés. Sauf indication contraire, aucune partie de cette publication ne peut être reproduite ni utilisée sous quelque forme que ce soit et par aucun procédé, électronique ou mécanique, y compris la photocopie et les microfilms, sans l'accord écrit de l'IEC ou du Comité national de l'IEC du pays du demandeur. Si vous avez des questions sur le copyright de l'IEC ou si vous désirez obtenir des droits supplémentaires sur cette publication, utilisez les coordonnées ci-après ou contactez le Comité national de l'IEC de votre pays de résidence.

IEC Secretariat
3, rue de Varembé
CH-1211 Geneva 20
Switzerland

Tel.: +41 22 919 02 11
info@iec.ch
www.iec.ch

About the IEC
The International Electrotechnical Commission (IEC) is the leading global organization that prepares and publishes International Standards for all electrical, electronic and related technologies.

About IEC publications
The technical content of IEC publications is kept under constant review by the IEC. Please make sure that you have the latest edition, a corrigendum or an amendment might have been published.

IEC publications search - webstore.iec.ch/advsearchform
The advanced search enables to find IEC publications by a variety of criteria (reference number, text, technical committee, …). It also gives information on projects, replaced and withdrawn publications.

IEC Just Published - webstore.iec.ch/justpublished
Stay up to date on all new IEC publications. Just Published details all new publications released. Available online and once a month by email.

IEC Customer Service Centre - webstore.iec.ch/csc
If you wish to give us your feedback on this publication or need further assistance, please contact the Customer Service Centre: sales@iec.ch.

IEC Products & Services Portal - products.iec.ch
Discover our powerful search engine and read freely all the publications previews. With a subscription you will always have access to up to date content tailored to your needs.

Electropedia - www.electropedia.org
The world's leading online dictionary on electrotechnology, containing more than 22 300 terminological entries in English and French, with equivalent terms in 19 additional languages. Also known as the International Electrotechnical Vocabulary (IEV) online.

A propos de l'IEC
La Commission Electrotechnique Internationale (IEC) est la première organisation mondiale qui élabore et publie des Normes internationales pour tout ce qui a trait à l'électricité, à l'électronique et aux technologies apparentées.

A propos des publications IEC
Le contenu technique des publications IEC est constamment revu. Veuillez vous assurer que vous possédez l'édition la plus récente, un corrigendum ou amendement peut avoir été publié.

Recherche de publications IEC - webstore.iec.ch/advsearchform
La recherche avancée permet de trouver des publications IEC en utilisant différents critères (numéro de référence, texte, comité d'études, …). Elle donne aussi des informations sur les projets et les publications remplacées ou retirées.

IEC Just Published - webstore.iec.ch/justpublished
Restez informé sur les nouvelles publications IEC. Just Published détaille les nouvelles publications parues. Disponible en ligne et une fois par mois par email.

Service Clients - webstore.iec.ch/csc
Si vous désirez nous donner des commentaires sur cette publication ou si vous avez des questions contactez-nous: sales@iec.ch.

IEC Products & Services Portal - products.iec.ch
Découvrez notre puissant moteur de recherche et consultez gratuitement tous les aperçus des publications. Avec un abonnement, vous aurez toujours accès à un contenu à jour adapté à vos besoins.

Electropedia - www.electropedia.org
Le premier dictionnaire d'électrotechnologie en ligne au monde, avec plus de 22 300 articles terminologiques en anglais et en français, ainsi que les termes équivalents dans 19 langues additionnelles. Egalement appelé Vocabulaire Electrotechnique International (IEV) en ligne.

AVA Documents
Document Sharing Hub

Full document details: IEC 61300-3-4-2023

IEC 61300-3-4

Edition 4.0 2023-05

INTERNATIONAL STANDARD

NORME INTERNATIONALE

Fibre optic interconnecting devices and passive components – Basic test and measurement procedures – Part 3-4: Examinations and measurements – Attenuation

Dispositifs d'interconnexion et composants passifs fibroniques – Procédures fondamentales d'essais et de mesures – Partie 3-4: Examens et mesures – Affaiblissement

INTERNATIONAL
ELECTROTECHNICAL
COMMISSION

COMMISSION
ELECTROTECHNIQUE
INTERNATIONALE

ICS 33.180.20

ISBN 978-2-8322-5998-6

Warning! Make sure that you obtained this publication from an authorized distributor.
Attention! Veuillez vous assurer que vous avez obtenu cette publication via un distributeur agréé.

® Registered trademark of the International Electrotechnical Commission
Marque déposée de la Commission Electrotechnique Internationale

Documents
Document Sharing Hub

Full document details: IEC 61300-3-4-2023

CONTENTS

FOREWORD 4
1 Scope 6
2 Normative references 6
3 Terms, definitions and abbreviated terms 6
3.1 Terms and definitions 6
3.2 Abbreviated terms 7
4 General description 7
4.1 General 7
4.2 Precautions 7
5 Apparatus 8
5.1 Launch conditions and light source (LS) 8
5.2 Optical power meter (PM) 8
5.3 Temporary joint (TJ) 9
5.4 Fibre 9
5.5 Reference plug (RP) 9
5.6 Reference adaptor (RA) 9
5.7 Termination 10
6 Procedure 10
6.1 Preconditioning 10
6.2 Visual inspection 10
6.3 DUT configuration types and test methods 10
6.4 Attenuation measurements with a LSPM 11
6.4.1 General 11
6.4.2 Cutback method 12
6.4.3 Substitution method 12
6.4.4 Insertion method (A) 13
6.4.5 Insertion method (B) with direct coupling to power meter 14
6.4.6 Insertion method (C) with additional test patchcord 14
6.4.7 Insertion method (D) with additional test patchcord 15
6.5 Attenuation measurements with an OTDR 16
6.5.1 Measurement description 16
6.5.2 Bidirectional measurement 17
6.5.3 Measurement method 17
6.5.4 Evaluation procedure 18
7 Details to be specified and reported 19
Annex A (informative) Consideration of multicore fibre 20
A.1 General 20
A.2 Additional apparatus 20
A.2.1 Optical switch (OSW) 20
A.2.2 Fan-in/fan-out device (FIFO) 20
A.3 Test setup and procedure – LSPM 20
A.4 Test setup and procedure – OTDR 21
Bibliography 22

Figure 1 – Cutback method – Type 1, type 2 and type 3 DUT 12
Figure 2 – Substitution method – Type 4, type 7, and type 8 DUT 13

AVA Documents
Document Sharing Hub

Full document details: IEC 61300-3-4-2023

Figure 3 – Insertion method (A) – Type 2 DUT 14
Figure 4 – Insertion method (B) – Type 5 and type 6 DUT 14
Figure 5 – Insertion method (C) – Type 4, type 5, type 7 and type 8 DUT 15
Figure 6 – Insertion method (D) – Type 4, type 5, type 7 and type 8 DUT 15
Figure 7 – Method 1 – One launch section 16
Figure 8 – Method 2 – Two launch sections 16
Figure 9 – Non-reflective event evaluation 18
Figure 10 – Reflective event evaluation 18
Figure A.1 – FIFO device example 20
Figure A.2 – Insertion method B – Type 5 MCF DUT 21
Figure A.3 – Method 1 – One launch section MCF DUT 21

Table 1 – Preferred source conditions 8
Table 2 – Preferred power meter parameters 9
Table 3 – DUT configuration types 11

Documents
Document Sharing Hub

Full document details: IEC 61300-3-4-2023

INTERNATIONAL ELECTROTECHNICAL COMMISSION

FIBRE OPTIC INTERCONNECTING DEVICES AND PASSIVE COMPONENTS – BASIC TEST AND MEASUREMENT PROCEDURES –

Part 3-4: Examinations and measurements – Attenuation

FOREWORD

1) The International Electrotechnical Commission (IEC) is a worldwide organization for standardization comprising all national electrotechnical committees (IEC National Committees). The object of IEC is to promote international co-operation on all questions concerning standardization in the electrical and electronic fields. To this end and in addition to other activities, IEC publishes International Standards, Technical Specifications, Technical Reports, Publicly Available Specifications (PAS) and Guides (hereafter referred to as "IEC Publication(s)"). Their preparation is entrusted to technical committees; any IEC National Committee interested in the subject dealt with may participate in this preparatory work. International, governmental and non-governmental organizations liaising with the IEC also participate in this preparation. IEC collaborates closely with the International Organization for Standardization (ISO) in accordance with conditions determined by agreement between the two organizations.
2) The formal decisions or agreements of IEC on technical matters express, as nearly as possible, an international consensus of opinion on the relevant subjects since each technical committee has representation from all interested IEC National Committees.
3) IEC Publications have the form of recommendations for international use and are accepted by IEC National Committees in that sense. While all reasonable efforts are made to ensure that the technical content of IEC Publications is accurate, IEC cannot be held responsible for the way in which they are used or for any misinterpretation by any end user.
4) In order to promote international uniformity, IEC National Committees undertake to apply IEC Publications transparently to the maximum extent possible in their national and regional publications. Any divergence between any IEC Publication and the corresponding national or regional publication shall be clearly indicated in the latter.
5) IEC itself does not provide any attestation of conformity. Independent certification bodies provide conformity assessment services and, in some areas, access to IEC marks of conformity. IEC is not responsible for any services carried out by independent certification bodies.
6) All users should ensure that they have the latest edition of this publication.
7) No liability shall attach to IEC or its directors, employees, servants or agents including individual experts and members of its technical committees and IEC National Committees for any personal injury, property damage or other damage of any nature whatsoever, whether direct or indirect, or for costs (including legal fees) and expenses arising out of the publication, use of, or reliance upon, this IEC Publication or any other IEC Publications.
8) Attention is drawn to the Normative references cited in this publication. Use of the referenced publications is indispensable for the correct application of this publication.
9) Attention is drawn to the possibility that some of the elements of this IEC Publication may be the subject of patent rights. IEC shall not be held responsible for identifying any or all such patent rights.

IEC 61300-3-4 has been prepared by subcommittee 86B: Fibre optic interconnecting devices and passive components, of IEC technical committee 86: Fibre optics. It is an International Standard.

This fourth edition cancels and replaces the third edition published in 2012. This edition constitutes a technical revision.

This edition includes the following significant technical changes with respect to the previous edition:

a) addition of Clause 3 containing terms, definitions and abbreviated terms;
b) addition of a new LSPM measurement method, insertion method (D);
c) addition of Annex A describing attenuation measurement of multicore fibre;
d) changed reference test method to insertion C and alternative test method to substitution or insertion D for power meter and type 4 DUT.

AVA Documents
Document Sharing Hub
Full document details: IEC 61300-3-4-2023

The text of this International Standard is based on the following documents:

Draft	Report on voting
86B/4656/FDIS	86B/4675/RVD

Full information on the voting for its approval can be found in the report on voting indicated in the above table.

The language used for the development of this International Standard is English.

This document was drafted in accordance with ISO/IEC Directives, Part 2, and developed in accordance with ISO/IEC Directives, Part 1 and ISO/IEC Directives, IEC Supplement, available at www.iec.ch/members_experts/refdocs. The main document types developed by IEC are described in greater detail at www.iec.ch/standardsdev/publications.

A list of all the parts in IEC 61300 series, published under the general title, *Fibre optic interconnecting devices and passive components – Basic test and measurement procedures*, can be found on the IEC website.

The committee has decided that the contents of this document will remain unchanged until the stability date indicated on the IEC website under webstore.iec.ch in the data related to the specific document. At this date, the document will be

- reconfirmed,
- withdrawn,
- replaced by a revised edition, or
- amended.

Documents
Document Sharing Hub

Full document details: IEC 61300-3-4-2023

FIBRE OPTIC INTERCONNECTING DEVICES AND PASSIVE COMPONENTS – BASIC TEST AND MEASUREMENT PROCEDURES –

Part 3-4: Examinations and measurements – Attenuation

1 Scope

This part of IEC 61300 describes the various methods available to measure the attenuation of optical components. It is not, however, applicable to random mate attenuation measurements as described in IEC 61300-3-34 and IEC 61300-3-45 nor for attenuation measurements of dense wavelength division multiplexing (DWDM) devices as described in IEC 61300-3-29.

2 Normative references

The following documents are referred to in the text in such a way that some or all of their content constitutes requirements of this document. For dated references, only the edition cited applies. For undated references, the latest edition of the referenced document (including any amendments) applies.

IEC 60793-2-10, *Optical fibres – Part 2-10: Product specifications – Sectional specification for category A1 multimode fibres*

IEC 60793-2-50, *Optical fibres – Part 2-50: Product specifications – Sectional specification for class B single-mode fibres*

IEC 60825-1, *Safety of laser products – Part 1: Equipment classification and requirements*

IEC 61300-1, *Fibre optic interconnecting devices and passive components – Basic test and measurement procedures – Part 1: General and guidance*

IEC 61300-3-35, *Fibre optic interconnecting devices and passive components – Basic test and measurement procedures – Part 3-35: Examinations and measurements – Visual inspection of fibre optic connectors and fibre-stub transceivers*

IEC 61755 (all parts), *Fibre optic interconnecting devices and passive components – Connector optical interfaces for single-mode fibres*

IEC 63267 (all parts), *Fibre optic interconnecting devices and passive components – Connector optical interfaces for enhanced macro bend loss multimode fibres*

3 Terms, definitions and abbreviated terms

3.1 Terms and definitions

For the purposes of this document, the terms and definitions given in IEC 61300-1 apply.

ISO and IEC maintain terminological databases for use in standardization at the following addresses:

- IEC Electropedia: available at http://www.electropedia.org/
- ISO Online browsing platform: available at http://www.iso.org/obp

Documents
Document Sharing Hub

Full document details: IEC 61300-3-4-2023

3.2 Abbreviated terms

ATM	alternative test method
C	passive optical component
CWDM	coarse wavelength division multiplexing
D	optical detector
DUT	device under test
FIFO	fan-in/fan-out device
LED	light emitting diode
LS	optical light source
LSPM	optical light source and power meter
MCF	multicore fibre
OSW	optical switch
OTDR	optical time domain reflectometer
PDL	polarization dependent loss
PM	optical power meter
RA	reference adaptor
RP	reference plug
RTM	reference test method
SCF	single core fibre
TJ	temporary joint

4 General description

4.1 General

Attenuation is intended to give a value for the decrease of optical power, expressed in decibels, resulting from the insertion of a DUT, within an optical link. The term "insertion loss" is sometimes used in place of "attenuation".

The DUT may have more than two optical ports. However, since an attenuation measurement is made across only two ports, the DUT in this document shall be described as having two ports.

The reference method for measuring attenuation is with an LSPM. OTDR measurements are presented as an alternative method. Three variations in the measurement of attenuation with a LSPM are presented.

4.2 Precautions

The power in the fibre and DUT shall not be at a level high enough to generate non-linear scattering or DUT overloading effects.

The position of the fibres in the test should be fixed between the measurement without the DUT, P_0, and with the DUT inserted, P_1, to avoid changes in attenuation due to bending loss.

In multimode measurements, a change in modal distribution in the measurement system due to fibre disturbance can affect the attenuation measurement.

Components with PDL will show different attenuation depending on the input state of polarization from the source. If the component PDL can exceed the acceptable uncertainty in the attenuation measurement, then either an unpolarized or polarization scrambled source

Documents
Document Sharing Hub
Full document details: IEC 61300-3-4-2023

should be used to measure the polarization averaged attenuation, or the methods of IEC 61300-3-2 should be used to measure PDL and attenuation together.

The laser safety recommendations in IEC 60825-1 shall be followed.

5 Apparatus

5.1 Launch conditions and light source (LS)

The launch condition for LSPM and OTDR shall be in accordance with IEC 61300-1 and shall be measured at the output of the launch reference connector.

The source unit consists of an optical emitter, the associated drive electronics and fibre pigtail (if any). Preferred source conditions are given in Table 1. The stability of the single-mode fibre source at 23 °C shall be ±0,01 dB from the initial value over the duration of the measurement. The stability of the multimode fibre source at 23 °C shall be ±0,05 dB from the initial value over the duration of the measurement. The source output power shall be greater than or equal to 20 dB above the minimum measurable power level.

Table 1 – Preferred source conditions

No.	Type	Central wavelength nm	Spectral width RMS nm	Source type
S1	Multimode	660 ± 30	≥ 10	Monochromator or LED
S2	Multimode	780 ± 30	≥ 10	Monochromator or LED
S3	Multimode	850 ± 30	≥ 10	Monochromator or LED
S4	Multimode	1 300 ± 30	≥ 10	Monochromator or LED
S5	Single-mode	1 310 ± 30	To be reported	Laser diode monochromator or LED
S6	Single-mode	1 550 ± 30	To be reported	Laser diode monochromator or LED
S7	Single-mode	1 625 ± 30	To be reported	Laser diode monochromator or LED
It is recognized that some components, for example for CWDM, can require the use of other source types such as tunable lasers. It is therefore recommended, in these cases, that the preferred source characteristics are specified on the basis of the component to be measured. NOTE Central wavelength (centroidal wavelength) and spectral width are defined in IEC 61280-1-3.				

5.2 Optical power meter (PM)

The power meter unit consists of an optical detector (D), the mechanism for connecting to it and associated detection electronics. The connection to the detector should either be with an adaptor that accepts a bare fibre, or a connector plug of the appropriate design.

The measurement system shall be stable within specified limits over the period of time required to measure P_0 and P_1. For measurements where the connection to the detector shall be disconnected between the measurement of P_0 and P_1, the measurement repeatability shall be less than or equal to 0,02 dB. A detector with a large sensitive area should be used to achieve this.

The dynamic range of the power meter shall be capable of measuring the power level exiting from the DUT at the wavelength being measured.

Documents
Document Sharing Hub
Full document details: IEC 61300-3-4-2023

The preferred power meter parameters are given below in Table 2. The power meter should be calibrated for the wavelength range and power level to be measured. The power meter stability should be less than or equal to 0,01 dB over the measurement time and temperature range. The stability and validity of dark current corrections from zeroing calibration can influence this.

Table 2 – Preferred power meter parameters

Number	Type	Maximum nonlinearity dB	Relative uncertainty dB
D1	Multimode	±0,05 (–60 dBm < input power < –5 dBm)	≤ 0,05
D2	Single-mode	±0,01 (attenuation < 10 dB) ±0,05 (10 dB < attenuation < 60 dB)	≤ 0,02
In order to ensure that all light exiting the fibre is detected by the power meter, the sensitive area of the detector and the relative position between it and the fibre should be compatible with the numerical aperture of the fibre. NOTE Common sources of relative uncertainty are polarization dependence and interference with reflections from the power meter and fibre connector surfaces. The sensitivity of the power meter to such reflections can be characterized by the parameter spectra ripple, determined as the periodic change in responsivity vs. the wavelength of a coherent light source.			

5.3 Temporary joint (TJ)

A temporary joint is a method, device or mechanical fixture for temporarily aligning two fibre ends into a stable, reproducible, low-loss joint. It is used when direct connection of the DUT to the measurement system is not achievable by a standard connector. It may, for example, be a precision V-groove, vacuum chuck, a micromanipulator or a fusion or mechanical splice. The temporary joint shall be stable to within ±10 % of the required measurement uncertainty in dB over the time taken to measure P_0 and P_1. A suitable refractive index matching material may be used to improve the stability of the TJ.

5.4 Fibre

The fibre in the lead from the source to the TJ, in the test patchcord, and in the substitute patchcord, shall belong to the same category as that used in the DUT.

Fibres shall be in accordance with IEC 60793-2-10 or IEC 60793-2-50.

5.5 Reference plug (RP)

Where a RP is required to form complete connector assemblies in any of the test methods, the RP becomes, in effect, a part of the DUT during the measurement of attenuation. The RP shall meet the requirements of the relevant optical interface standard found in the IEC 61755 series or IEC 63267 series.

5.6 Reference adaptor (RA)

Where a RA is required to form complete connector assemblies in any of the test methods, the RA becomes, in effect, a part of the DUT during the measurement of attenuation. The RA shall meet the requirements of the relevant optical interface standard found in the IEC 61755 series or IEC 63267 series.

Documents
Document Sharing Hub
Full document details: IEC 61300-3-4-2023

5.7 Termination

A termination may consist of a bare fibre, a connector plug, or a receptacle. When a bare fibre is used as a termination, a TJ or bare fibre adaptor is used depending on the configuration of the test and the location of the bare fibre end. When a DUT has multiple connector plugs or receptacles, they can consist of the same or different types. If the DUT has different connector plugs or receptacles on either end of the DUT, the ATM may be necessary.

6 Procedure

6.1 Preconditioning

The optical interfaces of the DUT shall be clean and free from any debris likely to affect the performance of the test and any resultant measurements. The manufacturer's cleaning procedure shall be followed.

The DUT shall be allowed to stabilize at standard atmospheric conditions according to IEC 61300-1 for at least 1 h prior to testing.

Care should be exercised throughout the test to ensure that mating surfaces are not contaminated with oil or grease. It is recognized that bare fingers can deposit a film of grease.

6.2 Visual inspection

All connector end faces shall be inspected for cleanliness according to IEC 61300-3-35 and cleaned as needed. Recommended cleaning methods for connector end faces are described in IEC TR 62627-01.

6.3 DUT configuration types and test methods

Eight different DUT configuration types are described in Table 3. The differences between these configuration types are primarily in the terminations of the optical ports. Terminations may consist of bare fibre, a connector plug, or a receptacle.

The RTM and ATM to be used for each DUT configuration type are defined in Table 3. Different test configurations and methods can result in different uncertainties of the attenuation being measured. In cases of dispute, the RTM should be used.

Consideration for devices with multicore fibre can be found in Annex A.

Documents
Document Sharing Hub
Full document details: IEC 61300-3-4-2023

Table 3 – DUT configuration types

Type	Description	DUT	Test methods	
			Reference test method RTM	**Alternative test method** ATM
1	Fibre to fibre (component)	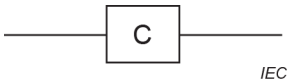	Power meter (cutback)	OTDR
2	Fibre to fibre (splice or field-mountable connector set)	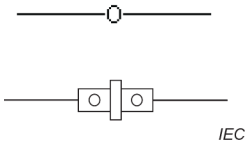	Power meter (insertion A)	Power meter (cutback) Or OTDR
3	Fibre to plug		Power meter (cutback)	OTDR
4	Plug to plug (component)	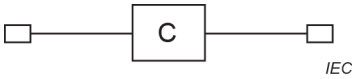	Power meter (insertion C)	Power meter (substitution or insertion D) or OTDR
5	Plug to plug (patchcord)	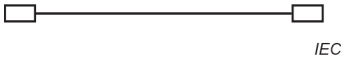	Power meter (insertion B)	Power meter (insertion C or insertion D) or OTDR
6	Single plug (pigtail)	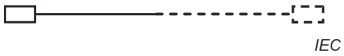	Power meter (insertion B)	OTDR
7	Receptacle to receptacle (component)	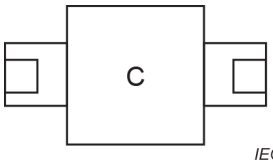	Power meter (insertion C)	Power meter (substitution or insertion D) or OTDR
8	Receptacle to plug (component)	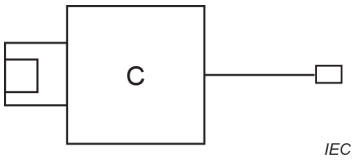	Power meter (insertion C)	Power meter (substitution or insertion D) or OTDR

An OTDR can be used on components with more than two ports, but in this case the reflected power from the ports not being measured should be suppressed in the attenuation zone.

NOTE 1 C is a passive optical component which can have more than the two ports indicated.

NOTE 2 Insertion measurements and cutback measurements can be expected to give equivalent measurements for type 2 DUTs.

NOTE 3 Due to measurement considerations, the OTDR method can have more uncertainty than other measurement methods but can be the only test applicable.

6.4 Attenuation measurements with a LSPM

6.4.1 General

The measurement of attenuation using cutback, substitution or insertion is based on the use of a PM, as described in 5.2.

Documents
Document Sharing Hub

Two measurements of power are required for each measurement of attenuation, A, with a power meter:

$$A = -10\log\frac{P_1}{P_0}\ \text{dB} \tag{1}$$

where

P_1 is the measurement of power with the DUT in the path;

P_0 is the measurement of power without the DUT in the path.

Suitable connections shall be provided between the fibre and the detector. Connections may be with either an adaptor to connect a bare fibre or with a connector adaptor for the appropriate connector plug.

6.4.2 Cutback method

For a type 1 and type 2 DUT, one lead of the DUT is connected to the source with a TJ. The other lead is connected to the detector, and P_1 is measured (see Figure 1). The fibre is cut at CP, and P_0 is measured.

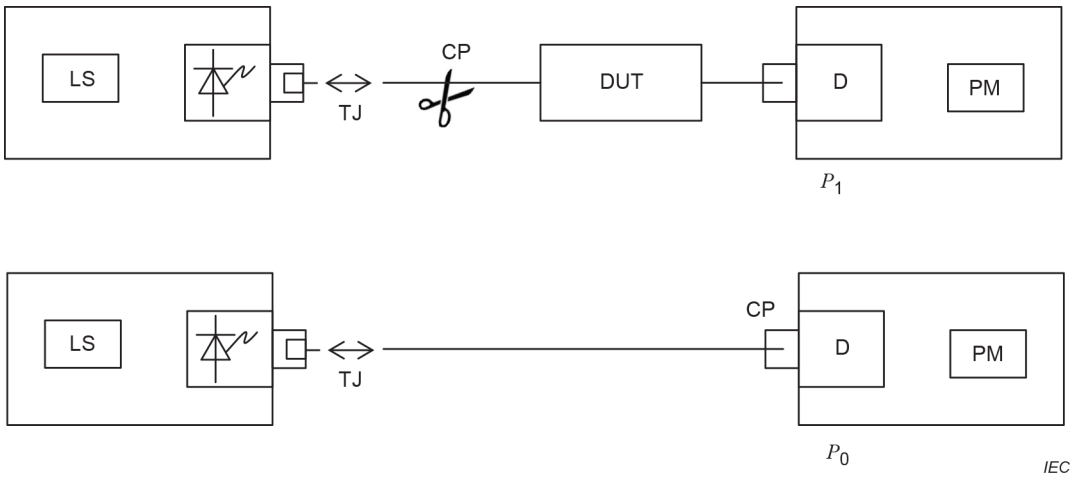

Figure 1 – Cutback method – Type 1, type 2 and type 3 DUT

For a type 3, fibre-to-plug DUT, a RA and a RP with a pigtail are added to the DUT to form a complete connector assembly. Attenuation of a type 3 DUT is the attenuation of the complete connector assembly (plug-adaptor-plug) with pigtail leads and is measured as a type 1 DUT.

6.4.3 Substitution method

In the substitution method, P_1 is measured with the DUT in the measurement set-up, and P_0 is measured with a substitute patchcord in place of the DUT (see Figure 2).

For a type 4 DUT, a RA is added to the RP on both the source lead and the test patchcord (see Figure 2).

Documents
Document Sharing Hub
Full document details: IEC 61300-3-4-2023

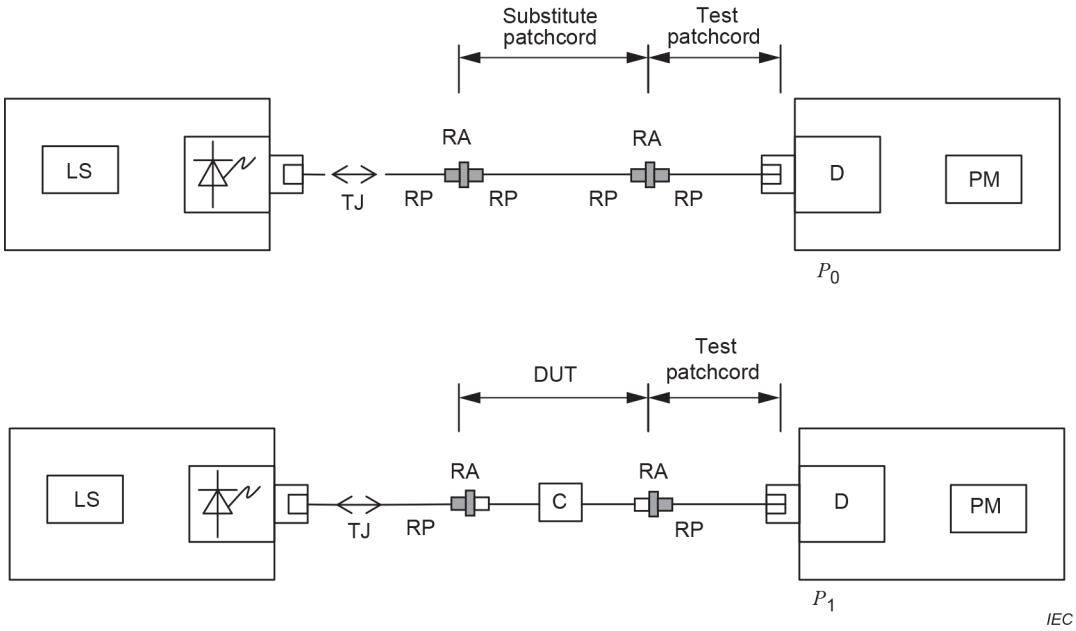

Figure 2 – Substitution method – Type 4, type 7, and type 8 DUT

For a type 7 DUT, the measurement is made in the same way as a plug-to-plug DUT, except that reference adaptors are not required for the measurement of P_1 (see Figure 2).

For a type 8 DUT, the measurement is made in the same way as for a plug-to-plug DUT, except that only one reference adaptor is required for the measurement of P_1 (see Figure 2). In this case, the reference adaptor shall be the one nearest the source.

Substitution measurements can be expected to give somewhat lower results of attenuation than insertion measurements for types 4, 7, and 8 DUTs. This is due to the fact that in the substitution method the reference power, P_0, includes the attenuation of the "substitute patchcord" with its connections to the measurement system. Therefore, the value of P_0 in the substitution method is lower than in the insertion method.

6.4.4 Insertion method (A)

For a type 2 fibre-to-fibre DUT (splice- or field-mountable connector set), P_0 is measured with a length of fibre between the temporary joint and the detector, the fibre is cut, the splice- or field-mountable connector set is installed, and P_1 is measured (see Figure 3). The fibres can be similar fibres or dissimilar fibres as long as they are compatible with each other. If dissimilar fibres are used, care should be taken to ensure the effects of dissimilar fibres are considered in the measurement results (see IEC TR 62000 for guidance on single-mode fibres).

Documents
Document Sharing Hub
Full document details: IEC 61300-3-4-2023