IEC 61300-3-47

Edition 1.0 2014-07

INTERNATIONAL STANDARD

NORME INTERNATIONALE

colour inside

Fibre optic interconnecting devices and passive components – Basic test and measurement procedures –
Part 3-47: Examinations and measurements – End face geometry of PC/APC spherically polished ferrules using interferometry

Dispositifs d'interconnexion et composants passifs fibroniques – Procédures fondamentales d'essais et de mesures –
Partie 3-47: Examens et mesures – Géométrie de l'extrémité des férules PC/APC polies de façon sphérique par interférométrie

IEC 61300-3-47:2014-07(en-fr)

Documents
Document Sharing Hub

Full document details: IEC 61300-3-47-2014

THIS PUBLICATION IS COPYRIGHT PROTECTED
Copyright © 2014 IEC, Geneva, Switzerland

All rights reserved. Unless otherwise specified, no part of this publication may be reproduced or utilized in any form or by any means, electronic or mechanical, including photocopying and microfilm, without permission in writing from either IEC or IEC's member National Committee in the country of the requester. If you have any questions about IEC copyright or have an enquiry about obtaining additional rights to this publication, please contact the address below or your local IEC member National Committee for further information.

Droits de reproduction réservés. Sauf indication contraire, aucune partie de cette publication ne peut être reproduite ni utilisée sous quelque forme que ce soit et par aucun procédé, électronique ou mécanique, y compris la photocopie et les microfilms, sans l'accord écrit de l'IEC ou du Comité national de l'IEC du pays du demandeur. Si vous avez des questions sur le copyright de l'IEC ou si vous désirez obtenir des droits supplémentaires sur cette publication, utilisez les coordonnées ci-après ou contactez le Comité national de l'IEC de votre pays de résidence.

IEC Central Office
3, rue de Varembé
CH-1211 Geneva 20
Switzerland

Tel.: +41 22 919 02 11
info@iec.ch
www.iec.ch

About the IEC
The International Electrotechnical Commission (IEC) is the leading global organization that prepares and publishes International Standards for all electrical, electronic and related technologies.

About IEC publications
The technical content of IEC publications is kept under constant review by the IEC. Please make sure that you have the latest edition, a corrigendum or an amendment might have been published.

IEC publications search - webstore.iec.ch/advsearchform
The advanced search enables to find IEC publications by a variety of criteria (reference number, text, technical committee,…). It also gives information on projects, replaced and withdrawn publications.

IEC Just Published - webstore.iec.ch/justpublished
Stay up to date on all new IEC publications. Just Published details all new publications released. Available online and once a month by email.

IEC Customer Service Centre - webstore.iec.ch/csc
If you wish to give us your feedback on this publication or need further assistance, please contact the Customer Service Centre: sales@iec.ch.

Electropedia - www.electropedia.org
The world's leading online dictionary on electrotechnology, containing more than 22 000 terminological entries in English and French, with equivalent terms in 16 additional languages. Also known as the International Electrotechnical Vocabulary (IEV) online.

IEC Glossary - std.iec.ch/glossary
67 000 electrotechnical terminology entries in English and French extracted from the Terms and Definitions clause of IEC publications issued since 2002. Some entries have been collected from earlier publications of IEC TC 37, 77, 86 and CISPR.

A propos de l'IEC
La Commission Electrotechnique Internationale (IEC) est la première organisation mondiale qui élabore et publie des Normes internationales pour tout ce qui a trait à l'électricité, à l'électronique et aux technologies apparentées.

A propos des publications IEC
Le contenu technique des publications IEC est constamment revu. Veuillez vous assurer que vous possédez l'édition la plus récente, un corrigendum ou amendement peut avoir été publié.

Recherche de publications IEC - webstore.iec.ch/advsearchform
La recherche avancée permet de trouver des publications IEC en utilisant différents critères (numéro de référence, texte, comité d'études,…). Elle donne aussi des informations sur les projets et les publications remplacées ou retirées.

IEC Just Published - webstore.iec.ch/justpublished
Restez informé sur les nouvelles publications IEC. Just Published détaille les nouvelles publications parues. Disponible en ligne et une fois par mois par email.

Service Clients - webstore.iec.ch/csc
Si vous désirez nous donner des commentaires sur cette publication ou si vous avez des questions contactez-nous: sales@iec.ch.

Electropedia - www.electropedia.org
Le premier dictionnaire d'électrotechnologie en ligne au monde, avec plus de 22 000 articles terminologiques en anglais et en français, ainsi que les termes équivalents dans 16 langues additionnelles. Egalement appelé Vocabulaire Electrotechnique International (IEV) en ligne.

Glossaire IEC - std.iec.ch/glossary
67 000 entrées terminologiques électrotechniques, en anglais et en français, extraites des articles Termes et Définitions des publications IEC parues depuis 2002. Plus certaines entrées antérieures extraites des publications des CE 37, 77, 86 et CISPR de l'IEC.

Documents
Document Sharing Hub

Full document details: IEC 61300-3-47-2014

IEC 61300-3-47

Edition 1.0 2014-07

INTERNATIONAL STANDARD

NORME INTERNATIONALE

colour inside

Fibre optic interconnecting devices and passive components – Basic test and measurement procedures –
Part 3-47: Examinations and measurements – End face geometry of PC/APC spherically polished ferrules using interferometry

Dispositifs d'interconnexion et composants passifs fibroniques – Procédures fondamentales d'essais et de mesures –
Partie 3-47: Examens et mesures – Géométrie de l'extrémité des férules PC/APC polies de façon sphérique par interférométrie

INTERNATIONAL
ELECTROTECHNICAL
COMMISSION

COMMISSION
ELECTROTECHNIQUE
INTERNATIONALE

ICS 33.180.20

ISBN 978-2-8322-7188-9

Warning! Make sure that you obtained this publication from an authorized distributor.
Attention! Veuillez vous assurer que vous avez obtenu cette publication via un distributeur agréé.

AVA Documents
Document Sharing Hub

® Registered trademark of the International Electrotechnical Commission
Marque déposée de la Commission Electrotechnique Internationale

Full document details: IEC 61300-3-47-2014

CONTENTS

CONTENTS 2
FOREWORD 3
1 Scope 5
2 Terms and definitions 5
3 Measurement by interferometer 7
3.1 General 7
3.2 Ferrule/connector holder 7
3.3 Optical interferometric system 8
3.4 Microscope with camera 8
4 Requirements for the interferometer 8
4.1 XY calibration (radius of curvature) 8
4.2 Z calibration (fibre height) 8
4.3 Alignment of ferrule axis with the interferometer's optical axis (apex offset calibration) 8
4.4 Tilt and key angle 8
5 Measurement method 8
5.1 General 8
5.2 Measurement regions 8
5.3 Measurement procedure for the radius of curvature 9
5.4 Measurement procedure for the dome eccentricity (apex offset) 10
5.5 Measurement procedure for fibre height 10
6 Details to be specified 13
Annex A (normative) Calibration for the interferometer 14
A.1 XY calibration 14
A.2 Z calibration 14
A.3 Alignment of the ferule axis with the optical axis of the interferometer ("apex offset calibration") 14
A.4 Tilt and key angle 14
Annex B (informative) Measurement procedure for end face "angle error" of angled convex polished ferrules 15
Annex C (informative) Formula for calculating ferrule end face geometry 17

Figure 1 – Radius of curvature of a spherically polished ferrule end face 5
Figure 2 – Apex offset of a spherically polished ferrule end face 6
Figure 3 – Fibre height of a spherically polished ferrule end face 6
Figure 4 – Ferrule end face angle for spherically polished ferrules 7
Figure 5 – Interferometer 7
Figure 6 – Ferrule end face and measurement regions 9
Figure 7 – Ferrule end face surface 11
Figure 8 – Fitting region and averaging region of the ferrule end face surface 11
Figure 9 – Converted end face surface of the ferrule 12
Figure 10 – Converted ferrule end face surface without the extracting region 12
Figure B.1 – Example of key error calculated from interference pattern for a convex polished ferrule 15

AVA Documents
Document Sharing Hub

Full document details: IEC 61300-3-47-2014

INTERNATIONAL ELECTROTECHNICAL COMMISSION

FIBRE OPTIC INTERCONNECTING DEVICES AND PASSIVE COMPONENTS – BASIC TEST AND MEASUREMENT PROCEDURES –

Part 3-47: Examinations and measurements – End face geometry of PC/APC spherically polished ferrules using interferometry

FOREWORD

1) The International Electrotechnical Commission (IEC) is a worldwide organization for standardization comprising all national electrotechnical committees (IEC National Committees). The object of IEC is to promote international co-operation on all questions concerning standardization in the electrical and electronic fields. To this end and in addition to other activities, IEC publishes International Standards, Technical Specifications, Technical Reports, Publicly Available Specifications (PAS) and Guides (hereafter referred to as "IEC Publication(s)"). Their preparation is entrusted to technical committees; any IEC National Committee interested in the subject dealt with may participate in this preparatory work. International, governmental and non-governmental organizations liaising with the IEC also participate in this preparation. IEC collaborates closely with the International Organization for Standardization (ISO) in accordance with conditions determined by agreement between the two organizations.
2) The formal decisions or agreements of IEC on technical matters express, as nearly as possible, an international consensus of opinion on the relevant subjects since each technical committee has representation from all interested IEC National Committees.
3) IEC Publications have the form of recommendations for international use and are accepted by IEC National Committees in that sense. While all reasonable efforts are made to ensure that the technical content of IEC Publications is accurate, IEC cannot be held responsible for the way in which they are used or for any misinterpretation by any end user.
4) In order to promote international uniformity, IEC National Committees undertake to apply IEC Publications transparently to the maximum extent possible in their national and regional publications. Any divergence between any IEC Publication and the corresponding national or regional publication shall be clearly indicated in the latter.
5) IEC itself does not provide any attestation of conformity. Independent certification bodies provide conformity assessment services and, in some areas, access to IEC marks of conformity. IEC is not responsible for any services carried out by independent certification bodies.
6) All users should ensure that they have the latest edition of this publication.
7) No liability shall attach to IEC or its directors, employees, servants or agents including individual experts and members of its technical committees and IEC National Committees for any personal injury, property damage or other damage of any nature whatsoever, whether direct or indirect, or for costs (including legal fees) and expenses arising out of the publication, use of, or reliance upon, this IEC Publication or any other IEC Publications.
8) Attention is drawn to the Normative references cited in this publication. Use of the referenced publications is indispensable for the correct application of this publication.
9) Attention is drawn to the possibility that some of the elements of this IEC Publication may be the subject of patent rights. IEC shall not be held responsible for identifying any or all such patent rights.

International Standard IEC 61300-3-47 has been prepared by subcommittee 86B: Fibre optic interconnecting devices and passive components, of IEC technical committee 86: Fibre optics.

This standard merges IEC 61300-3-15, IEC 61300-3-16, IEC 61300-3-17 and IEC 61300-3-23. After publication of this standard IEC 61300-3-15, IEC 61300-3-16, IEC 61300-3-17 and IEC 61300-3-23 will be withdrawn.

Documents
Document Sharing Hub

Full document details: IEC 61300-3-47-2014

This bilingual version (2019-07) corresponds to the English version, published in 2014-07.

The text of this standard is based on the following documents:

FDIS	Report on voting
86B/3773/FDIS	86B/3805/RVD

Full information on the voting for the approval of this standard can be found in the report on voting indicated in the above table.

This publication has been drafted in accordance with the ISO/IEC Directives, Part 2.

A list of all parts in the IEC 61300 series, published under the general title, *Fibre optic interconnecting and passive components – Basic test and measurement procedures*, can be found on the IEC website.

The French version of this standard has not been voted upon.

The committee has decided that the contents of this publication will remain unchanged until the stability date indicated on the IEC web site under "http://webstore.iec.ch" in the data related to the specific publication. At this date, the publication will be

- reconfirmed,
- withdrawn,
- replaced by a revised edition, or
- amended.

IMPORTANT – The 'colour inside' logo on the cover page of this publication indicates that it contains colours which are considered to be useful for the correct understanding of its contents. Users should therefore print this document using a colour printer.

Documents
Document Sharing Hub

Full document details: IEC 61300-3-47-2014

FIBRE OPTIC INTERCONNECTING DEVICES AND PASSIVE COMPONENTS – BASIC TEST AND MEASUREMENT PROCEDURES –

Part 3-47: Examinations and measurements – End face geometry of PC/APC spherically polished ferrules using interferometry

1 Scope

This part of IEC 61300 describes a procedure to measure the end face geometry of a spherically polished ferrule or connector. Within this standard the words “ferrule” and “connector” can be used interchangeably.

2 Terms and definitions

For the purposes of this document, the following terms and definitions apply.

2.1
radius of curvature
B
radius of curvature of the portion of the spherically polished ferrule end face which is domed for physical contact

Note 1 to entry: It is assumed that the end face is spherical, although in practice the end face is often aspherical (see Figure 1).

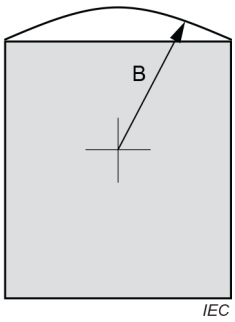

Figure 1 – Radius of curvature of a spherically polished ferrule end face

2.2
apex offset
C
distance between the axis of the ferrule and the line parallel to the axis which passes through the vertex (or highest point on the dome), formed by spherically polishing the ferrule, as shown in Figure 2

Documents
Document Sharing Hub
Full document details: IEC 61300-3-47-2014

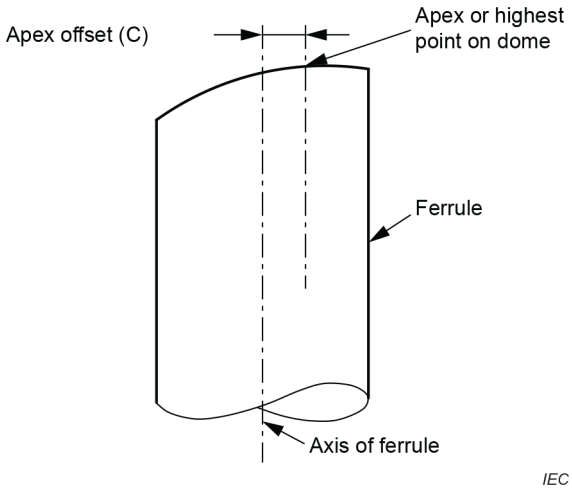

Figure 2 – Apex offset of a spherically polished ferrule end face

2.3
fibre height
average distance between the fibre end face and a virtual spherical surface which is fitted to the spherically polished ferrule end face (see Annex C)

Note 1 to entry: It is assumed that a circular region of the ferrule end face, which is centred to the ferrule axis, is spherical although in practice the end face is often aspherical. A positive value indicates fibre undercut (see Figure 3a). A negative value indicates fibre protrusion (see Figure 3b).

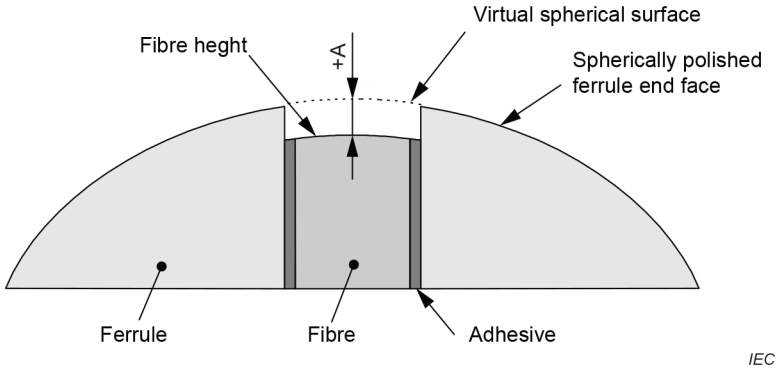

Figure 3a – Fibre height +A

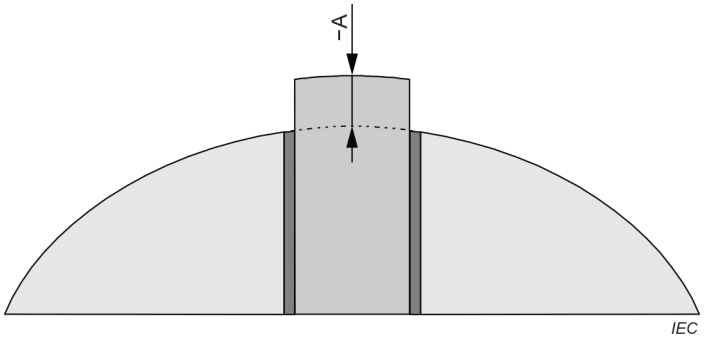

Figure 3b – Fibre height –A (protrusion)

Figure 3 – Fibre height of a spherically polished ferrule end face

Documents
Document Sharing Hub
Full document details: IEC 61300-3-47-2014

2.4
end face angle
angle (θ) between the plane perpendicular to the axis of the ferrule, and the straight line tangent to the polished surface at the fibre centre in the direction of the nominal angle (see Figure 4)

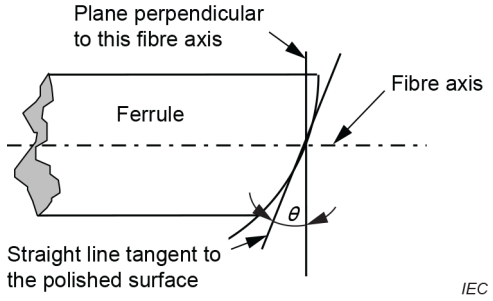

Figure 4 – Ferrule end face angle for spherically polished ferrules

3 Measurement by interferometer

3.1 General

A typical interferometer configuration is shown in Figure 5. The apparatus consists of a suitable ferrule/connector holder, an optical interferometric system combined with a microscope and a camera.

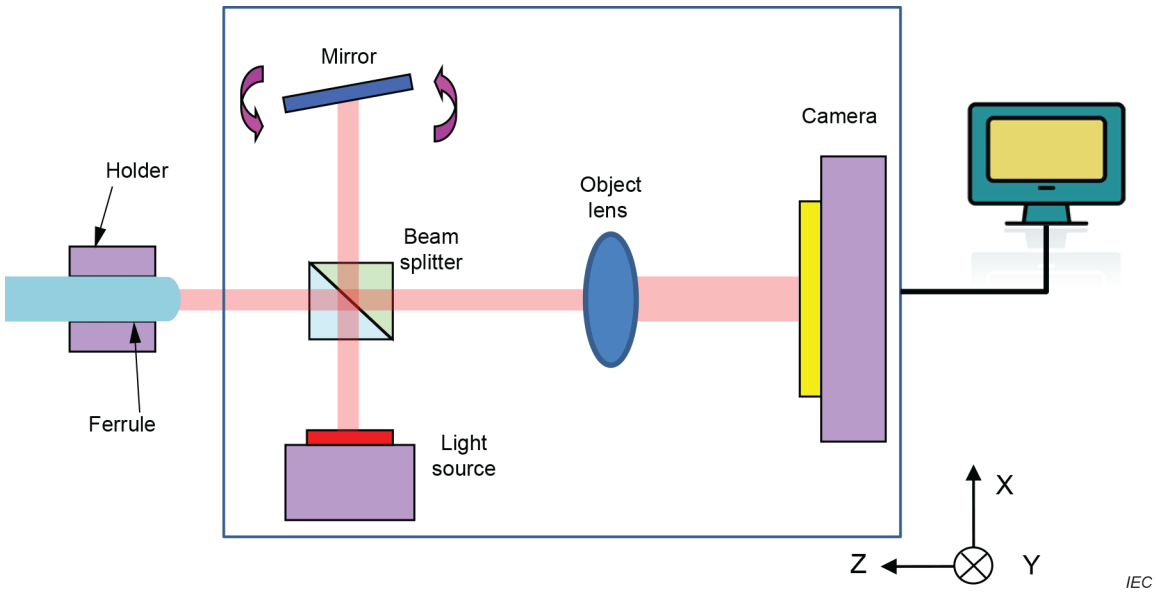

Figure 5 – Interferometer

3.2 Ferrule/connector holder

This is a suitable device to hold the ferrule/connector in a fixed alignment position with respect to the optical axis of the interferometer. The holder is designed such that the portion of the ferrule closest to the end face is secured by the holder. The ferrule shall be aligned by holding it over a distance of at least twice the ferrule diameter. The ferrules axis should be adjustable in order to make it parallel to the optical axis of the interferometer. Alternatively, this can be carried out by positioning the reference mirror of the interferometer. For angled polished ferrules adjustments are necessary to align the polish angle axis with the optical axis of the interferometer.

AVA Documents
Document Sharing Hub
Full document details: IEC 61300-3-47-2014

3.3 Optical interferometric system

A suitable optical interferometric system (for example a Michelson interferometer) displays an image with interference fringes of the ferrule's end face.

3.4 Microscope with camera

The image of the end face is projected on to the camera with a minimum field of view of 250 μm. Software processes the image(s) and calculates the required parameters.

4 Requirements for the interferometer

4.1 XY calibration (radius of curvature)

The interferometer shall have the ability to measure the radius of curvature with measurement uncertainty better than ±0,1 mm for radii from 5 mm to 30 mm. See Annex A.

4.2 Z calibration (fibre height)

The interferometer shall have the ability to measure the fibre height with measurement uncertainty better than ±10 nm. See Annex A.

4.3 Alignment of ferrule axis with the interferometer's optical axis (apex offset calibration)

The interferometer shall have the ability to measure the apex offset with a maximum difference of less than 5 μm between two measurements where the second measurement is made after rotating the ferrule by 180°. See Annex A.

NOTE This test is only possible with non-angled ferrules.

4.4 Tilt and key angle

When measuring angled connectors, calibration of the holder position is required. Measurement of a flat polished ferrule should have a measurement uncertainty better than ±0,1° for the key angle and ±0,03° for the tilt angle.

NOTE The key angle is the angular rotational misalignment between the ferrule mating surface of an angled end face connector, and its design orientation angle with respect to its key (see Annex B).

5 Measurement method

5.1 General

For all measurements, the instrument should be adjusted such that

a) a sample is placed in the measurement holder,

b) the image of the ferrule end face in the fibre zone is seen on the monitor,

c) the interference fringes appear on the ferrule end face,

d) the ferrule axis is correctly aligned with the optical axis of the interferometer ("apex offset calibration"),

e) all other instrument calibrations have been performed,

f) the system is configured according to the type of measurement to be performed (e.g. PC or APC ferrule/connector).

5.2 Measurement regions

Three regions shall be defined on the ferrule end face for the measurement (see Figure 6).

AVA Documents Document Sharing Hub

Full document details: IEC 61300-3-47-2014

a) Fitting region: the fitting region is set on the ferrule surface, and defined by a circular region having a diameter, D, minus a circular region having a diameter, E, (the extracting region). The fitting region shall be defined in order to cover the contact zone of the ferrule end face when the ferrule is mated.

b) Extracting region: the extracting region, which includes the fibre end face region and the adhesive region, is defined by a circle having a diameter E.

c) Averaging region: the averaging region is set on the fibre surface, and defined by a circular region “having a diameter F”. This region is used for fibre height A averaging.

The 3 regions should be concentric on the ferrule axis. For connectors with 125 µm nominal fibre diameter and a radius of curvature of nominally 5 mm to 30 mm, the values of the diameters D, E and F are as follows:

D = 250 µm

E = 140 µm

F = 50 µm

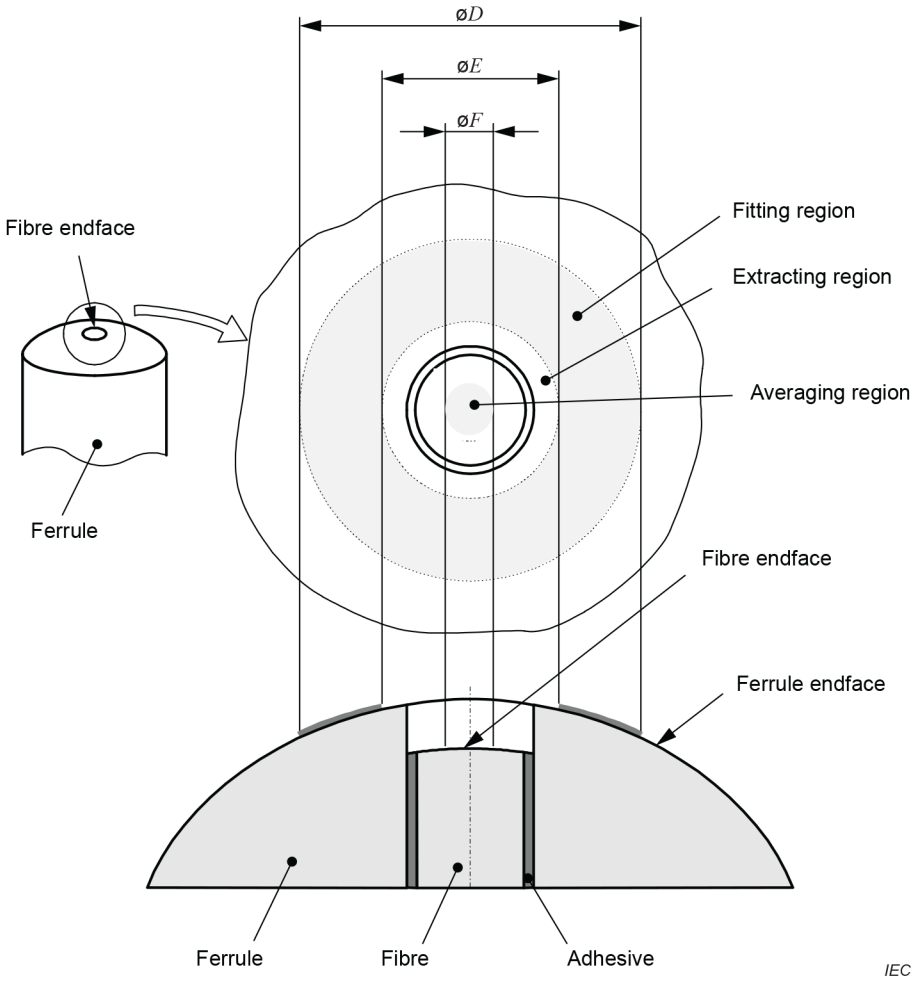

Figure 6 – Ferrule end face and measurement regions

5.3 Measurement procedure for the radius of curvature

The following steps shall be taken:

a) Measure the surface of the end face with the interferometer, recording the three-dimensional surface measurement data on its surface data processing unit (see Figure 7).

Documents
Document Sharing Hub
Full document details: IEC 61300-3-47-2014

b) Correct the surface data, taking into account the refractive indices and the absorption coefficients of the fibre and the ferrule.

c) Using the data from the fitting regions, calculate the “best fit” radius of curvature (Annex C).

5.4 Measurement procedure for the dome eccentricity (apex offset)

The following steps shall be taken:

a) Measure the surface of the end face with the interferometer, recording the three-dimensional surface measurement data on its surface data processing unit (see Figure 7).

b) Correct the surface data, taking into account the refractive indices and the absorption coefficients of the fibre and the ferrule.

c) From the analysis of the interference image(s) the normal distance between the centre of the sphere (Annex C) fitted to the surface over the fitting region and the fibre axis shall be measured. This value corresponds to the apex offset.

5.5 Measurement procedure for fibre height

The following steps shall be taken:

a) Measure the surface of the end face with the interferometer, recording the three-dimensional surface measurement data on its surface data processing unit (see Figure 7).

b) Correct the surface data, taking into account the refractive indices and the absorption coefficients of the fibre and the ferrule.

c) Using only the data within the averaging region and the fitting region evaluate A (see Figure 7 to Figure 10 and Annex C).

The calculation shall be as follows:

1) Create a converted surface from the corrected surface data by subtracting the “best fit” radius of curvature from the spherical surface data between the fitting region. The fitting region of the converted surface may be flat when the ferrule end face has an ideal spherical surface (See Figure 9).

2) Calculate an average surface height on the fibre averaging region and an average surface height on the fitted ferrule portion from the converted surface. The fibre height, A, is measured as the difference between the two average surface heights, as shown in Figure 10. A positive value indicates fibre undercut. A negative value indicates fibre protrusion.

Documents
Document Sharing Hub

Full document details: IEC 61300-3-47-2014