IEC 61300-3-51

Edition 1.0 2014-10

INTERNATIONAL STANDARD

NORME INTERNATIONALE

colour inside

Fibre optic interconnecting devices and passive components – Basic test and measurement procedures – Part 3-51: Examinations and measurements – Pin gauge withdrawal force for rectangular ferrule multi-fibre connectors

Dispositifs d'interconnexion et composants passifs à fibres optiques – Procédures fondamentales d'essais et de mesures – Partie 3-51: Examens et mesures – Force d'extraction d'une broche calibrée pour des connecteurs multifibres à férule rectangulaire

IEC 61300-3-51:2014-10(en-fr)

AVA Documents
Document Sharing Hub

Full document details: IEC 61300-3-51 2014

THIS PUBLICATION IS COPYRIGHT PROTECTED

Copyright © 2014 IEC, Geneva, Switzerland

All rights reserved. Unless otherwise specified, no part of this publication may be reproduced or utilized in any form or by any means, electronic or mechanical, including photocopying and microfilm, without permission in writing from either IEC or IEC's member National Committee in the country of the requester. If you have any questions about IEC copyright or have an enquiry about obtaining additional rights to this publication, please contact the address below or your local IEC member National Committee for further information.

Droits de reproduction réservés. Sauf indication contraire, aucune partie de cette publication ne peut être reproduite ni utilisée sous quelque forme que ce soit et par aucun procédé, électronique ou mécanique, y compris la photocopie et les microfilms, sans l'accord écrit de l'IEC ou du Comité national de l'IEC du pays du demandeur. Si vous avez des questions sur le copyright de l'IEC ou si vous désirez obtenir des droits supplémentaires sur cette publication, utilisez les coordonnées ci-après ou contactez le Comité national de l'IEC de votre pays de résidence.

IEC Central Office
3, rue de Varembé
CH-1211 Geneva 20
Switzerland

Tel.: +41 22 919 02 11
Fax: +41 22 919 03 00
info@iec.ch
www.iec.ch

About the IEC
The International Electrotechnical Commission (IEC) is the leading global organization that prepares and publishes International Standards for all electrical, electronic and related technologies.

About IEC publications
The technical content of IEC publications is kept under constant review by the IEC. Please make sure that you have the latest edition, a corrigenda or an amendment might have been published.

IEC Catalogue - webstore.iec.ch/catalogue
The stand-alone application for consulting the entire bibliographical information on IEC International Standards, Technical Specifications, Technical Reports and other documents. Available for PC, Mac OS, Android Tablets and iPad.

IEC publications search - www.iec.ch/searchpub
The advanced search enables to find IEC publications by a variety of criteria (reference number, text, technical committee,…). It also gives information on projects, replaced and withdrawn publications.

IEC Just Published - webstore.iec.ch/justpublished
Stay up to date on all new IEC publications. Just Published details all new publications released. Available online and also once a month by email.

Electropedia - www.electropedia.org
The world's leading online dictionary of electronic and electrical terms containing more than 30 000 terms and definitions in English and French, with equivalent terms in 14 additional languages. Also known as the International Electrotechnical Vocabulary (IEV) online.

IEC Glossary - std.iec.ch/glossary
More than 55 000 electrotechnical terminology entries in English and French extracted from the Terms and Definitions clause of IEC publications issued since 2002. Some entries have been collected from earlier publications of IEC TC 37, 77, 86 and CISPR.

IEC Customer Service Centre - webstore.iec.ch/csc
If you wish to give us your feedback on this publication or need further assistance, please contact the Customer Service Centre: csc@iec.ch.

A propos de l'IEC
La Commission Electrotechnique Internationale (IEC) est la première organisation mondiale qui élabore et publie des Normes internationales pour tout ce qui a trait à l'électricité, à l'électronique et aux technologies apparentées.

A propos des publications IEC
Le contenu technique des publications IEC est constamment revu. Veuillez vous assurer que vous possédez l'édition la plus récente, un corrigendum ou amendement peut avoir été publié.

Catalogue IEC - webstore.iec.ch/catalogue
Application autonome pour consulter tous les renseignements bibliographiques sur les Normes internationales, Spécifications techniques, Rapports techniques et autres documents de l'IEC. Disponible pour PC, Mac OS, tablettes Android et iPad.

Recherche de publications IEC - www.iec.ch/searchpub

La recherche avancée permet de trouver des publications IEC en utilisant différents critères (numéro de référence, texte, comité d'études,…). Elle donne aussi des informations sur les projets et les publications remplacées ou retirées.

IEC Just Published - webstore.iec.ch/justpublished

Restez informé sur les nouvelles publications IEC. Just Published détaille les nouvelles publications parues. Disponible en ligne et aussi une fois par mois par email.

Electropedia - www.electropedia.org

Le premier dictionnaire en ligne de termes électroniques et électriques. Il contient plus de 30 000 termes et définitions en anglais et en français, ainsi que les termes équivalents dans 14 langues additionnelles. Egalement appelé Vocabulaire Electrotechnique International (IEV) en ligne.

Glossaire IEC - std.iec.ch/glossary
Plus de 55 000 entrées terminologiques électrotechniques, en anglais et en français, extraites des articles Termes et Définitions des publications IEC parues depuis 2002. Plus certaines entrées antérieures extraites des publications des CE 37, 77, 86 et CISPR de l'IEC.

Service Clients - webstore.iec.ch/csc

Si vous désirez nous donner des commentaires sur cette publication ou si vous avez des questions contactez-nous: csc@iec.ch.

Documents
Document Sharing Hub

Full document details: IEC 61300-3-51 2014

IEC 61300-3-51

Edition 1.0 2014-10

INTERNATIONAL STANDARD

NORME INTERNATIONALE

colour inside

Fibre optic interconnecting devices and passive components – Basic test and measurement procedures – Part 3-51: Examinations and measurements – Pin gauge withdrawal force for rectangular ferrule multi-fibre connectors

Dispositifs d'interconnexion et composants passifs à fibres optiques – Procédures fondamentales d'essais et de mesures – Partie 3-51: Examens et mesures – Force d'extraction d'une broche calibrée pour des connecteurs multifibres à férule rectangulaire

INTERNATIONAL ELECTROTECHNICAL COMMISSION

COMMISSION ELECTROTECHNIQUE INTERNATIONALE

PRICE CODE
CODE PRIX Q

ICS 33.180.20

ISBN 978-2-8322-1886-0

Warning! Make sure that you obtained this publication from an authorized distributor.
Attention! Veuillez vous assurer que vous avez obtenu cette publication via un distributeur agréé.

AVA Documents
Document Sharing Hub

® Registered trademark of the International Electrotechnical Commission
Marque déposée de la Commission Electrotechnique Internationale

Full document details: IEC 61300-3-51 2014

CONTENTS

FOREWORD 4
1 Scope 6
2 Normative references 6
3 General description 7
3.1 General 7
3.2 Test conditions 7
4 Apparatus 7
4.1 Fixture 7
4.2 Pin gauge chuck 7
4.3 Plug gauge chuck 7
4.4 Pin gauge 7
4.5 Plug gauge 8
4.6 Weight 9
4.7 Tensile testing machine 9
5 Procedure 9
5.1 Method A: Method using the weight (Figure 3) 9
5.2 Method B: Method using the tensile testing machine (Figure 4) 10
6 Details to be specified 12
Annex A (informative) Experimental verification of the interchangeability between the pin gauge insertion force and the pin gauge withdrawal force 13
A.1 General 13
A.2 Measurement system 13
A.3 Measurement sample 13
A.4 Measurement procedure 14
A.5 Measurement results 14
A.6 Conclusion 15
Annex B (informative) Experimental verification of compatibility of Method A (method using the weight) and Method B (method using the tensile testing machine) 16
Bibliography 17

Figure 1 – Pin gauge 8
Figure 2 – Plug gauge for guide pin holes 8
Figure 3 – Method A for examination of pin gauge/plug gauge withdrawal force (method using the weight) 10
Figure 4 – Method B for examination of pin gauge/plug gauge withdrawal force (method using the tensile testing machine) 11
Figure A.1 – Measurement system 13
Figure A.2 – Insertion/withdrawal force measurement results 14
Figure B.1 – Relation between the withdrawal force values measured by Method A and Method B 16

Documents
Document Sharing Hub
Full document details: IEC 61300-3-51 2014

Table 1 – Test conditions 7
Table 2 – Dimensions of the pin gauge 8
Table 3 – Dimensions for plug gauge for guide pin holes 9
Table A.1 – Guide hole pitch of measurement samples 14

Documents
Document Sharing Hub

Full document details: IEC 61300-3-51 2014

INTERNATIONAL ELECTROTECHNICAL COMMISSION

FIBRE OPTIC INTERCONNECTING DEVICES AND PASSIVE COMPONENTS – BASIC TEST AND MEASUREMENT PROCEDURES –

Part 3-51: Examinations and measurements – Pin gauge withdrawal force for rectangular ferrule multi-fibre connectors

FOREWORD

1) The International Electrotechnical Commission (IEC) is a worldwide organization for standardization comprising all national electrotechnical committees (IEC National Committees). The object of IEC is to promote international co-operation on all questions concerning standardization in the electrical and electronic fields. To this end and in addition to other activities, IEC publishes International Standards, Technical Specifications, Technical Reports, Publicly Available Specifications (PAS) and Guides (hereafter referred to as "IEC Publication(s)"). Their preparation is entrusted to technical committees; any IEC National Committee interested in the subject dealt with may participate in this preparatory work. International, governmental and non-governmental organizations liaising with the IEC also participate in this preparation. IEC collaborates closely with the International Organization for Standardization (ISO) in accordance with conditions determined by agreement between the two organizations.
2) The formal decisions or agreements of IEC on technical matters express, as nearly as possible, an international consensus of opinion on the relevant subjects since each technical committee has representation from all interested IEC National Committees.
3) IEC Publications have the form of recommendations for international use and are accepted by IEC National Committees in that sense. While all reasonable efforts are made to ensure that the technical content of IEC Publications is accurate, IEC cannot be held responsible for the way in which they are used or for any misinterpretation by any end user.
4) In order to promote international uniformity, IEC National Committees undertake to apply IEC Publications transparently to the maximum extent possible in their national and regional publications. Any divergence between any IEC Publication and the corresponding national or regional publication shall be clearly indicated in the latter.
5) IEC itself does not provide any attestation of conformity. Independent certification bodies provide conformity assessment services and, in some areas, access to IEC marks of conformity. IEC is not responsible for any services carried out by independent certification bodies.
6) All users should ensure that they have the latest edition of this publication.
7) No liability shall attach to IEC or its directors, employees, servants or agents including individual experts and members of its technical committees and IEC National Committees for any personal injury, property damage or other damage of any nature whatsoever, whether direct or indirect, or for costs (including legal fees) and expenses arising out of the publication, use of, or reliance upon, this IEC Publication or any other IEC Publications.
8) Attention is drawn to the Normative references cited in this publication. Use of the referenced publications is indispensable for the correct application of this publication.
9) Attention is drawn to the possibility that some of the elements of this IEC Publication may be the subject of patent rights. IEC shall not be held responsible for identifying any or all such patent rights.

International Standard IEC 61300-3-51 has been prepared by subcommittee 86B: Fibre optic interconnecting devices and passive components, of IEC technical committee 86: Fibre optics.

The text of this standard is based on the following documents:

FDIS	Report on voting
86B/3817/FDIS	86B/3844/RVD

Full information on the voting for the approval of this standard can be found in the report on voting indicated in the above table.

This publication has been drafted in accordance with the ISO/IEC Directives, Part 2.

AVA Documents
Document Sharing Hub

Full document details: IEC 61300-3-51 2014

A list of all parts in the IEC 61300 series, published under the general title, *Fibre optic interconnecting and passive components – Basic test and measurement procedures,* can be found on the IEC website.

The committee has decided that the contents of this publication will remain unchanged until the stability date indicated on the IEC web site under "http://webstore.iec.ch" in the data related to the specific publication. At this date, the publication will be

- reconfirmed,
- withdrawn,
- replaced by a revised edition, or
- amended.

IMPORTANT – The 'colour inside' logo on the cover page of this publication indicates that it contains colours which are considered to be useful for the correct understanding of its contents. Users should therefore print this document using a colour printer.

Documents
Document Sharing Hub

Full document details: IEC 61300-3-51 2014

FIBRE OPTIC INTERCONNECTING DEVICES AND PASSIVE COMPONENTS – BASIC TEST AND MEASUREMENT PROCEDURES –

Part 3-51: Examinations and measurements – Pin gauge withdrawal force for rectangular ferrule multi-fibre connectors

1 Scope

This part of IEC 61300 is intended to describe the procedure required to measure the pin gauge withdrawal force for rectangular ferrule multi-fibre connectors.

This measurement can be used as an alternative to the measurement of the pin gauge insertion force, both of which evaluate the fit of the pin gauge(s) into the guide pin hole(s) of the female-type connector. The experimental verification of interchangeability between them is shown in Annex A.

For the male-type connector, IEC 61300-3-49 is applied to evaluate how securely the guide pins are retained in the guide holes.

2 Normative references

The following documents, in whole or in part, are normatively referenced in this document and are indispensable for its application. For dated references, only the edition cited applies. For undated references, the latest edition of the referenced document (including any amendments) applies.

IEC 61300-3-1, *Fibre optic interconnecting devices and passive components – Basic test and measurement procedures – Part 3-1: Examinations and measurements – Visual examination*

IEC 61754-5, *Fibre optic interconnecting devices and passive components – Fibre optic connector interfaces – Part 5: Type MT connector family*

IEC 61754-7-1, *Fibre optic interconnecting devices and passive components – Fibre optic connector interfaces – Part 7-1: Type MPO connector family – One fibre row*[1]

IEC 61754-7-2, *Fibre optic interconnecting devices and passive components – Fibre optic connector interfaces – Part 7-2: Type MPO connector family – Two fibre rows*[1]

IEC 61754-10, *Fibre optic interconnecting devices and passive components – Fibre optic connector interfaces – Part 10: Type Mini-MPO connector family*

IEC 61754-18, *Fibre optic interconnecting devices and passive components – Fibre optic connector interfaces – Part 18: Type MT-RJ connector family*

[1] To be published.

Documents
Document Sharing Hub

Full document details: IEC 61300-3-51 2014

3 General description

3.1 General

This measurement method is applied for optical connectors specified in IEC 61754-5, IEC 61754-7-1, IEC 61754-7-2, IEC 61754-10 and IEC 61754-18.

Two methods using weights or a tensile testing machine are described in this standard.

The optical connector is held using a fixture. For the measurement for a single guide pin hole, the pin gauge is placed in a pin gauge chuck and the weight or the tensile testing machine is connected to the pin gauge chuck.

For the measurement for two guide pin holes, the plug gauge is placed in a plug gauge chuck and the weight or the tensile testing machine is connected to the plug gauge chuck. By using the plug gauge, it is possible to check not only the size of each guide pin hole but also the relative position and the relative angle between two guide pin holes.

3.2 Test conditions

For a precise measurement such as design verification, the test conditions shall be controlled accurately as required in Table 1.

Table 1 – Test conditions

Temperature °C	**Relative humidity** % RH
22,0 – 24,0	50,0 ± 10,0

4 Apparatus

4.1 Fixture

The measurement shall not be affected by the connector fixture. The position and direction of the connector during the test shall not change as the test is repeated. The connector shall be placed in the fixture so that the front face of the connector housing is retained by the fixture as shown in Figure 3 and Figure 4.

4.2 Pin gauge chuck

The pin gauge chuck shall have a pin gauge retention force much greater than the required connector pin gauge withdrawal force, typically more than 200 N when using a tensile testing machine. The connection of the pin gauge to the weight or the tensile testing machine chuck shall not affect the measurement.

4.3 Plug gauge chuck

The plug gauge chuck shall have a plug gauge retention force much greater than the required connector plug gauge withdrawal force, typically more than 200 N, when using a tensile testing machine. The connection of the plug gauge to the weight or the tensile testing machine chuck shall not affect the measurement.

4.4 Pin gauge

Figure 1 and Table 2 show the pin gauge and dimensions of the pin gauge. The pin gauge shall have the required dimensions as specified in IEC 61754-5.

Documents
Document Sharing Hub
Full document details: IEC 61300-3-51 2014

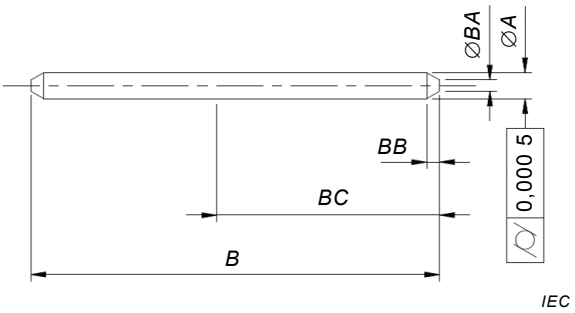

Figure 1 – Pin gauge

Table 2 – Dimensions of the pin gauge

Reference	Dimensions mm		Remarks
	Minimum	Maximum	
A	0,698 5	0,699 0	
B [a]	10,8	11,2	
BA	0,2	0,4	
BB	0,2	0,5	
BC [b]	6,0	–	

[a] Typical dimensions.

[b] Surface roughness R_z = 0,1 µm for the length of dimension *BC*.

4.5 Plug gauge

Figure 2 and Table 3 show the plug gauge and its dimensions. The plug gauge shall have the required dimensions as specified in IEC 61754-5.

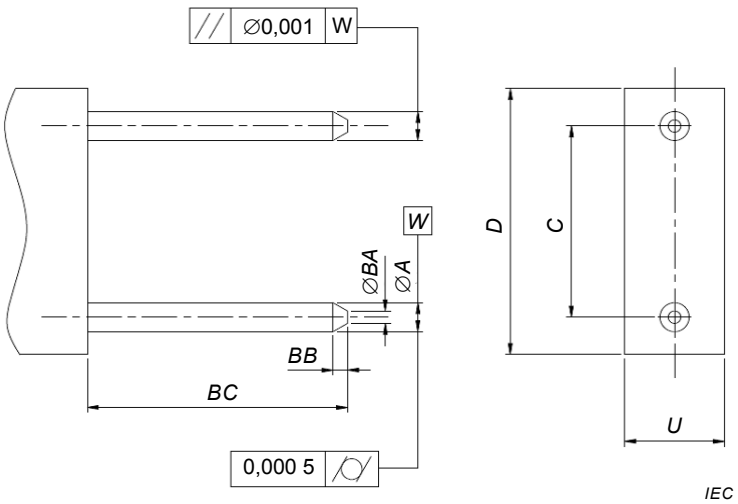

Figure 2 – Plug gauge for guide pin holes

Documents
Document Sharing Hub
Full document details: IEC 61300-3-51 2014

Table 3 – Dimensions for plug gauge for guide pin holes

Reference	Dimensions mm		Remarks
	Minimum	Maximum	
A	0,698 5	0,699 0	For two pins
C	4,599 5	4,600 5	
D [a]	6,3	6,5	
U [a]	2,4	2,5	
BA	0,2	0,4	
BB	0,2	0,5	
BC [b]	6,0	6,5	

[a] Typical dimensions.

[b] Surface roughness R_z = 0,1 μm for the length of dimension *BC*.

4.6 Weight

The weight to be used depends on the test to be carried out. The weight measurement is used for pass/fail tests including final inspection.

4.7 Tensile testing machine

The tensile testing machine shall be able to record (and/or hold) the maximum value during the measurement. The tensile testing machine measurement is used for design verification testing.

5 Procedure

5.1 Method A: Method using the weight (Figure 3)

The following steps shall be taken:

a) Prepare the device under test (DUT) according to the manufacturer's instructions and check the appearance in accordance with IEC 61300-3-1.

b) Place the DUT in the fixture.

c) Place the pin gauge or the plug gauge in the chuck.

d) Insert the pin gauge or the plug gauge into the guide pin hole(s) of the connector by more than 5,5 mm.

e) Fix the weight to the chuck. Adjust the total weight of the jig and the weight to the specified value.

f) Apply the weight slowly. Be sure that the force is applied along the axis of the guide pin hole(s).

g) Wait for the specified duration. Record if the pin gauge or the plug gauge is withdrawn by the specified force. Unless otherwise specified, the maximum duration shall be 15 s.

Documents
Document Sharing Hub

Full document details: IEC 61300-3-51 2014

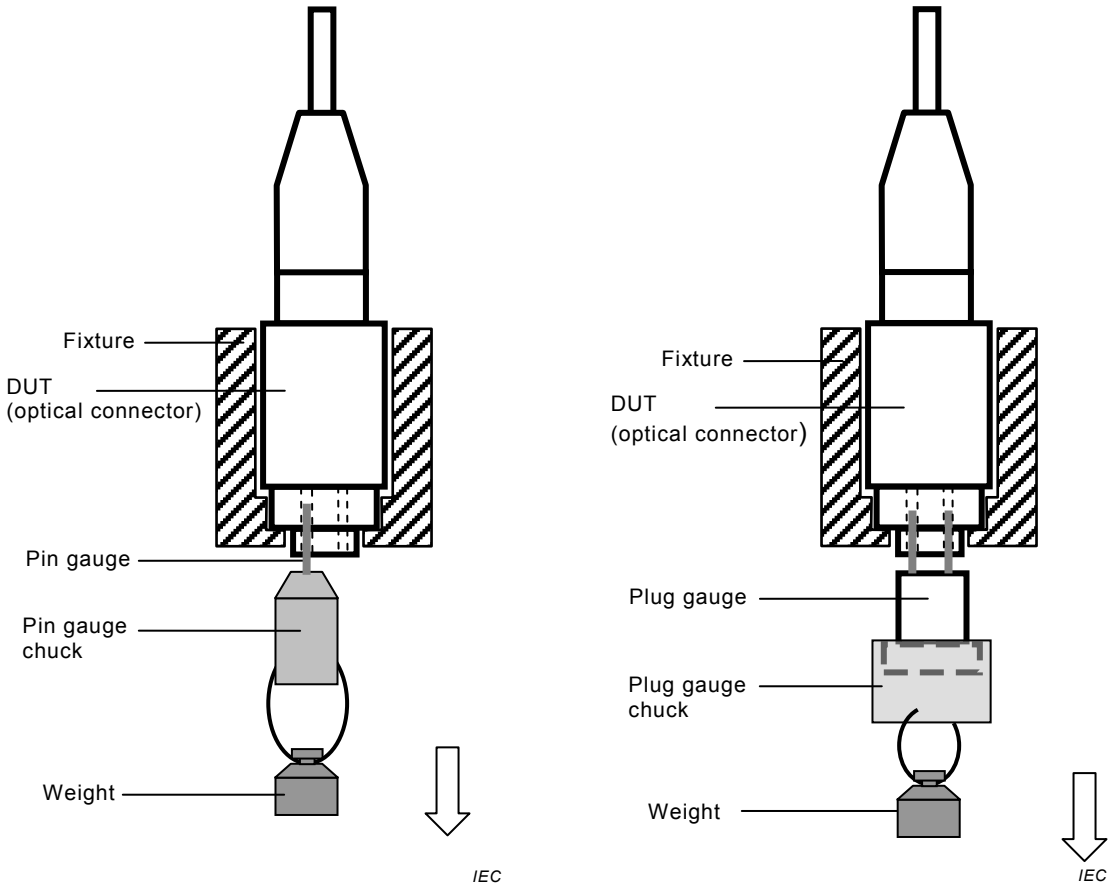

Figure 3a – Measurement for single hole

Figure 3b – Measurement for two holes

Figure 3 – Method A for examination of pin gauge/plug gauge withdrawal force (method using the weight)

5.2 Method B: Method using the tensile testing machine (Figure 4)

The following steps shall be taken:

a) Prepare the device under test according to the manufacturer's instructions and check the appearance in accordance with IEC 61300-3-1.

b) Place the DUT in the fixture.

c) Place the pin gauge or the plug gauge in the chuck.

d) Insert the pin gauge or the plug gauge into the guide pin hole(s) of the connector by more than 5,5 mm.

e) Connect the chuck to the tensile testing machine.

f) Apply tension using the tensile testing machine. The weight of the chuck should be factored in. Be sure that the force is applied along the axis of the guide pin hole(s).

g) Measure and record the maximum value when the pin gauge or the plug gauge is withdrawn. Rate of application shall be approximately 25 mm/min when the rate is not otherwise specified.

Documents
Document Sharing Hub
Full document details: IEC 61300-3-51 2014