IEC 61300-3-53

Edition 2.0 2020-12

INTERNATIONAL STANDARD

NORME INTERNATIONALE

colour inside

Fibre optic interconnecting devices and passive components – Basic test and measurement procedures
Part 3-53: Examinations and measurements – Encircled angular flux (EAF) measurement method based on two-dimensional far field data from multimode waveguide (including fibre)

Dispositifs d'interconnexion et composants passifs fibroniques – Procédures fondamentales d'essais et de mesures –
Partie 3-53: Examens et mesures – Méthode de mesure du flux angulaire inscrit (EAF) fondée sur les données bidimensionnelles de champ lointain d'un guide d'ondes multimodal (fibre incluse)

IEC 61300-3-53:2020-12(en-fr)

Documents
Document Sharing Hub

Full document details: IEC 61300-3-53-2020

THIS PUBLICATION IS COPYRIGHT PROTECTED
Copyright © 2020 IEC, Geneva, Switzerland

All rights reserved. Unless otherwise specified, no part of this publication may be reproduced or utilized in any form or by any means, electronic or mechanical, including photocopying and microfilm, without permission in writing from either IEC or IEC's member National Committee in the country of the requester. If you have any questions about IEC copyright or have an enquiry about obtaining additional rights to this publication, please contact the address below or your local IEC member National Committee for further information.

Droits de reproduction réservés. Sauf indication contraire, aucune partie de cette publication ne peut être reproduite ni utilisée sous quelque forme que ce soit et par aucun procédé, électronique ou mécanique, y compris la photocopie et les microfilms, sans l'accord écrit de l'IEC ou du Comité national de l'IEC du pays du demandeur. Si vous avez des questions sur le copyright de l'IEC ou si vous désirez obtenir des droits supplémentaires sur cette publication, utilisez les coordonnées ci-après ou contactez le Comité national de l'IEC de votre pays de résidence.

IEC Central Office
3, rue de Varembé
CH-1211 Geneva 20
Switzerland

Tel.: +41 22 919 02 11
info@iec.ch
www.iec.ch

About the IEC
The International Electrotechnical Commission (IEC) is the leading global organization that prepares and publishes International Standards for all electrical, electronic and related technologies.

About IEC publications
The technical content of IEC publications is kept under constant review by the IEC. Please make sure that you have the latest edition, a corrigendum or an amendment might have been published.

IEC publications search - webstore.iec.ch/advsearchform
The advanced search enables to find IEC publications by a variety of criteria (reference number, text, technical committee,…). It also gives information on projects, replaced and withdrawn publications.

IEC Just Published - webstore.iec.ch/justpublished
Stay up to date on all new IEC publications. Just Published details all new publications released. Available online and once a month by email.

IEC Customer Service Centre - webstore.iec.ch/csc
If you wish to give us your feedback on this publication or need further assistance, please contact the Customer Service Centre: sales@iec.ch.

Electropedia - www.electropedia.org
The world's leading online dictionary on electrotechnology, containing more than 22 000 terminological entries in English and French, with equivalent terms in 16 additional languages. Also known as the International Electrotechnical Vocabulary (IEV) online.

IEC Glossary - std.iec.ch/glossary
67 000 electrotechnical terminology entries in English and French extracted from the Terms and Definitions clause of IEC publications issued since 2002. Some entries have been collected from earlier publications of IEC TC 37, 77, 86 and CISPR.

A propos de l'IEC
La Commission Electrotechnique Internationale (IEC) est la première organisation mondiale qui élabore et publie des Normes internationales pour tout ce qui a trait à l'électricité, à l'électronique et aux technologies apparentées.

A propos des publications IEC
Le contenu technique des publications IEC est constamment revu. Veuillez vous assurer que vous possédez l'édition la plus récente, un corrigendum ou amendement peut avoir été publié.

Recherche de publications IEC - webstore.iec.ch/advsearchform
La recherche avancée permet de trouver des publications IEC en utilisant différents critères (numéro de référence, texte, comité d'études,…). Elle donne aussi des informations sur les projets et les publications remplacées ou retirées.

IEC Just Published - webstore.iec.ch/justpublished
Restez informé sur les nouvelles publications IEC. Just Published détaille les nouvelles publications parues. Disponible en ligne et une fois par mois par email.

Service Clients - webstore.iec.ch/csc
Si vous désirez nous donner des commentaires sur cette publication ou si vous avez des questions contactez-nous: sales@iec.ch.

Electropedia - www.electropedia.org
Le premier dictionnaire d'électrotechnologie en ligne au monde, avec plus de 22 000 articles terminologiques en anglais et en français, ainsi que les termes équivalents dans 16 langues additionnelles. Egalement appelé Vocabulaire Electrotechnique International (IEV) en ligne.

Glossaire IEC - std.iec.ch/glossary
67 000 entrées terminologiques électrotechniques, en anglais et en français, extraites des articles Termes et Définitions des publications IEC parues depuis 2002. Plus certaines entrées antérieures extraites des publications des CE 37, 77, 86 et CISPR de l'IEC.

Documents
Document Sharing Hub

Full document details: IEC 61300-3-53-2020

IEC 61300-3-53

Edition 2.0 2020-12

INTERNATIONAL STANDARD

NORME INTERNATIONALE

colour inside

Fibre optic interconnecting devices and passive components – Basic test and measurement procedures
Part 3-53: Examinations and measurements – Encircled angular flux (EAF) measurement method based on two-dimensional far field data from multimode waveguide (including fibre)

Dispositifs d'interconnexion et composants passifs fibroniques – Procédures fondamentales d'essais et de mesures –
Partie 3-53: Examens et mesures – Méthode de mesure du flux angulaire inscrit (EAF) fondée sur les données bidimensionnelles de champ lointain d'un guide d'ondes multimodal (fibre incluse)

INTERNATIONAL
ELECTROTECHNICAL
COMMISSION

COMMISSION
ELECTROTECHNIQUE
INTERNATIONALE

ICS 33.180.20

ISBN 978-2-8322-9136-8

Warning! Make sure that you obtained this publication from an authorized distributor.
Attention! Veuillez vous assurer que vous avez obtenu cette publication via un distributeur agréé.

AVA Documents
Document Sharing Hub

® Registered trademark of the International Electrotechnical Commission
Marque déposée de la Commission Electrotechnique Internationale

Full document details: IEC 61300-3-53-2020

CONTENTS

FOREWORD 4
1 Scope 6
2 Normative references 6
3 Terms and definitions 6
4 Measurement conditions 8
5 Apparatus 8
5.1 General 8
5.2 Measurement method 1: $f\theta$ lens imaging 8
5.2.1 General 8
5.2.2 Micro-positioner 8
5.2.3 FFP optical system 9
5.2.4 Imaging device 9
5.2.5 Computer (EAF analyser module) 9
5.3 Measurement method 2: direct imaging 9
5.3.1 General 9
5.3.2 Micro-positioner 9
5.3.3 Imaging device 10
5.3.4 Computer, position controller and image acquisition 10
6 Sampling and specimens 10
7 Geometric calibration 10
7.1 General 10
7.2 Light source 11
7.3 Procedure 11
8 Measurement procedure 11
8.1 Safety 11
8.2 Far field image acquisition 12
8.2.1 General 12
8.2.2 Waveguide end-face alignment 12
8.2.3 Light source image acquisition 12
8.3 Removal of background noise 13
8.4 Centre determination 13
8.4.1 General 13
8.4.2 Method A: Optical centre determination 13
8.4.3 Method B: Mechanical centre determination 14
8.5 Computation of encircled angular flux 15
9 Results 16
9.1 Information available with each measurement 16
9.2 Information available upon request 17
10 Details to be specified 17
Annex A (informative) System recommendations – Measurement method 1: far field optical system 18
A.1 General 18
A.2 Recommendations 18
Annex B (informative) System recommendations – Measurement method 2: direct imaging 19

AVA Documents
Document Sharing Hub
Full document details: IEC 61300-3-53-2020

B.1 General 19
B.2 Recommendations 19
Annex C (informative) Shading effect of CCD devices: incident ray angular sensitivity 20
C.1 General 20
C.2 Scheme of shading and example of the characteristics 20
Annex D (normative) Launch optics for the EAF template compliance test 22
D.1 General 22
D.2 Setup 22
Bibliography 23

Figure 1 – Apparatus configuration of measurement method 1: $f\theta$ lens imaging 8
Figure 2 – Far field optical system diagram 9
Figure 3 – Apparatus configuration of measurement method 2: direct imaging 10
Figure 4 – Calibration apparatus example 11
Figure 5 – Acquired far field image 12
Figure 6 – Acquired far field image with false colour 13
Figure 7 – Optical centre determination 14
Figure 8 – Transformation of x-y to polar coordinates on the image sensor plane 15
Figure 9 – Typical encircled angular flux chart 16
Figure A.1 – An example of an optical system using an $f\theta$ lens 18
Figure C.1 – Scheme of shading effect 20
Figure C.2 – Example of shading characteristics 21
Figure D.1 – Schematic view of the setup for the EAF compliance test 22

Documents
Document Sharing Hub
Full document details: IEC 61300-3-53-2020

INTERNATIONAL ELECTROTECHNICAL COMMISSION

FIBRE OPTIC INTERCONNECTING DEVICES AND PASSIVE COMPONENTS – BASIC TEST AND MEASUREMENT PROCEDURES

Part 3-53: Examinations and measurements – Encircled angular flux (EAF) measurement method based on two-dimensional far field data from multimode waveguide (including fibre)

FOREWORD

1) The International Electrotechnical Commission (IEC) is a worldwide organization for standardization comprising all national electrotechnical committees (IEC National Committees). The object of IEC is to promote international co-operation on all questions concerning standardization in the electrical and electronic fields. To this end and in addition to other activities, IEC publishes International Standards, Technical Specifications, Technical Reports, Publicly Available Specifications (PAS) and Guides (hereafter referred to as "IEC Publication(s)"). Their preparation is entrusted to technical committees; any IEC National Committee interested in the subject dealt with may participate in this preparatory work. International, governmental and non-governmental organizations liaising with the IEC also participate in this preparation. IEC collaborates closely with the International Organization for Standardization (ISO) in accordance with conditions determined by agreement between the two organizations.
2) The formal decisions or agreements of IEC on technical matters express, as nearly as possible, an international consensus of opinion on the relevant subjects since each technical committee has representation from all interested IEC National Committees.
3) IEC Publications have the form of recommendations for international use and are accepted by IEC National Committees in that sense. While all reasonable efforts are made to ensure that the technical content of IEC Publications is accurate, IEC cannot be held responsible for the way in which they are used or for any misinterpretation by any end user.
4) In order to promote international uniformity, IEC National Committees undertake to apply IEC Publications transparently to the maximum extent possible in their national and regional publications. Any divergence between any IEC Publication and the corresponding national or regional publication shall be clearly indicated in the latter.
5) IEC itself does not provide any attestation of conformity. Independent certification bodies provide conformity assessment services and, in some areas, access to IEC marks of conformity. IEC is not responsible for any services carried out by independent certification bodies.
6) All users should ensure that they have the latest edition of this publication.
7) No liability shall attach to IEC or its directors, employees, servants or agents including individual experts and members of its technical committees and IEC National Committees for any personal injury, property damage or other damage of any nature whatsoever, whether direct or indirect, or for costs (including legal fees) and expenses arising out of the publication, use of, or reliance upon, this IEC Publication or any other IEC Publications.
8) Attention is drawn to the Normative references cited in this publication. Use of the referenced publications is indispensable for the correct application of this publication.
9) Attention is drawn to the possibility that some of the elements of this IEC Publication may be the subject of patent rights. IEC shall not be held responsible for identifying any or all such patent rights.

International Standard IEC 61300-3-53 has been prepared by subcommittee 86B: Fibre optic interconnecting devices and passive components, of IEC technical committee 86:Fibre optics.

This second edition cancels and replaces the first edition in 2015. This edition constitutes a technical revision.

This edition includes the following significant technical changes with respect to the previous edition:

a) the scope of the applicable wave guides, and graded index multimode optical wave guide and fibre have been included;
b) the structure of 5.3 has been rearranged;
c) Annex C and Annex D have been added.

Documents
Document Sharing Hub

Full document details: IEC 61300-3-53-2020

The text of this International Standard is based on the following documents:

FDIS	Report on voting
86B/4343/FDIS	86B/4373/RVD

Full information on the voting for the approval of this International Standard can be found in the report on voting indicated in the above table.

This document has been drafted in accordance with the ISO/IEC Directives, Part 2.

A list of all parts in the IEC 61300, published under the general title *Fibre optic interconnecting devices and passive components – Basic test and measurement procedures*, can be found on the IEC website.

The committee has decided that the contents of this document will remain unchanged until the stability date indicated on the IEC website under "http://webstore.iec.ch" in the data related to the specific document. At this date, the document will be

- reconfirmed,
- withdrawn,
- replaced by a revised edition, or
- amended.

IMPORTANT – The 'colour inside' logo on the cover page of this publication indicates that it contains colours which are considered to be useful for the correct understanding of its contents. Users should therefore print this document using a colour printer.

Documents
Document Sharing Hub

Full document details: IEC 61300-3-53-2020

FIBRE OPTIC INTERCONNECTING DEVICES AND PASSIVE COMPONENTS – BASIC TEST AND MEASUREMENT PROCEDURES

Part 3-53: Examinations and measurements – Encircled angular flux (EAF) measurement method based on two-dimensional far field data from multimode waveguide (including fibre)

1 Scope

This part of IEC 61300 defines the encircled angular flux measurement of multimode waveguide light sources, in which most of the transverse modes are excited. The term "waveguide" is understood to include both channel waveguides and optical fibres but not slab waveguides.

The applicable fibre types are the followings:

- A1 specified in IEC 60793-2-10;
- A3 specified in IEC 60793-2-30;
- A4 specified in IEC 60793-2-40.

2 Normative references

The following documents are referred to in the text in such a way that some or all of their content constitutes requirements of this document. For dated references, only the edition cited applies. For undated references, the latest edition of the referenced document (including any amendments) applies.

IEC 60793-2-10, *Optical fibres – Part 2-10: Product specifications – Sectional specification for category A1 multimode fibres*

IEC 60793-2-30, *Optical fibres – Part 2-30: Product specifications – Sectional specification for category A3 multimode fibres*

IEC 60793-2-40, *Optical fibres – Part 2-40: Product specifications – Sectional specification for category A4 multimode fibres*

IEC 60825-1, *Safety of laser products – Part 1: Equipment classification and requirements*

IEC 61300-1:2016, *Fibre optic interconnecting devices and passive components – Basic test and measurement procedures – Part 1: General and guidance*

3 Terms and definitions

For the purposes of this document, the following terms and definitions apply.

ISO and IEC maintain terminological databases for use in standardization at the following addresses:

- IEC Electropedia: available at http://www.electropedia.org/
- ISO Online browsing platform: available at http://www.iso.org/obp

Documents
Document Sharing Hub

Full document details: IEC 61300-3-53-2020

3.1
encircled angular flux
EAF
fraction of the total optical power radiating from a multimode waveguide's core within a certain solid angle

3.2
Fraunhofer far field
far field which occurs when

$$L \gg D^2/\lambda$$

where

L is the distance of the detection plane from the waveguide end facet;

D is the diameter of the multimode waveguide core or strictly mode field diameter;

λ is the wavelength.

3.3
***fθ* lens**
lens converting the angle of incidence of the input beam, θ, into the output beam height, h

Note 1 to entry: The relationship between them is $h = f\theta$, where f is the focal length of the lens.

3.4
mode power distribution
MPD
relative mode power in each of the mode groups of a multimode fibre

[SOURCE: IEC 62614-2:2015, 3.5, modified – The words "often shown graphically" have been deleted.]

3.5
numerical aperture
NA
sine of the vertex half-angle of the largest cone of meridional rays that can enter or leave the core of an optical waveguide, multiplied by the refractive index of the medium in which the cone is located

3.6
far field pattern
FFP
angular distribution of light radiating from a waveguide's core, which corresponds to the optical power distribution on a plane normal to the waveguide axis some distance from its end facet

Note 1 to entry: The distance depends on the largest waveguide cross section, a, the wavelength, λ, and the angle, φ, to the optical axis. In the far field region, the shape of the distribution does not change as the distance from the waveguide end facet increases; the distribution only scales in size with distance, L.

$$L >> \frac{2a^2(\cos\varphi)^2}{\lambda}$$

3.7
far field image
far field pattern formed on an imaging device

Documents
Document Sharing Hub
Full document details: IEC 61300-3-53-2020

3.8
neutral density filter
ND filter
filter that attenuates light of all colours equally

4 Measurement conditions

Optical fibres which are applied to this measurement are specified in IEC 60793-2-10, IEC 60793-2-30 and IEC 60793-2-40. The measurement ambient condition shall be the standard atmospheric conditions specified in IEC 61300-1.

5 Apparatus

5.1 General

The optical source multimode waveguide shall be long enough to ensure that all cladding modes are stripped by passage through the waveguide. Often, the fibre coating or tight buffer is sufficient to perform this function. Alternatively, a cladding mode stripper shall be used in the source launch multimode optical fibre. An example of a typical cladding mode stripper which would be suitable for optical fibre is sufficient windings of the fibre around a mandrel of an appropriate diameter. The windings also have a more important essential effect to fully fill the transverse modes across the maximum mode field diameter. It should be checked that all of the transverse modes of the fibre are sufficiently well excited. See Annex D. This can be done by comparing the FFPs for different lengths of the launch fibre or different light sources. Once the FFP no longer changes in form as the launch fibre length is increased, there is no need to increase the length further.

5.2 Measurement method 1: $f\theta$ lens imaging

5.2.1 General

In theory, this measurement method, which is effectively a coherent optical method to Fourier transform the near field to the far field using a lens, does not operate well using very wideband optical sources. Experimentally, it has been shown to operate sufficiently well for sources up to 30 nm bandwidth, which are most commonly used.

Figure 1 below shows the apparatus configuration. The measurement system consists of a micro-positioner, a far field broadband optical system, an imaging device (e.g. camera) and computer (EAF analyser module). An appropriate type of camera (imaging device) shall be chosen to suit the wavelength under test.

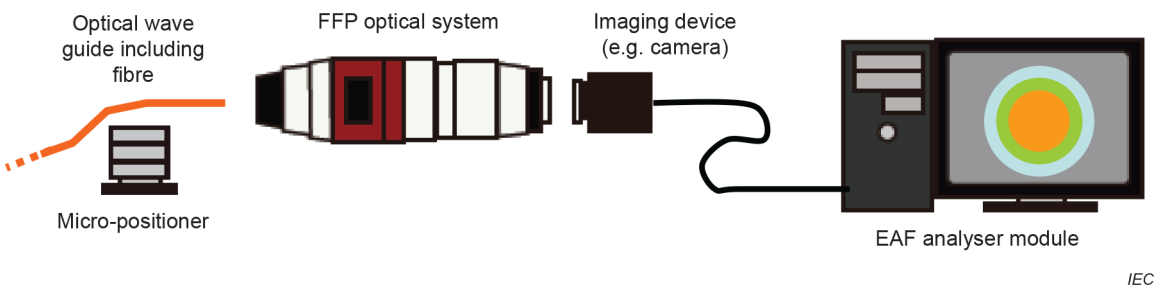

Figure 1 – Apparatus configuration of measurement method 1: $f\theta$ lens imaging

5.2.2 Micro-positioner

The micro-positioner shall hold the optical source (including the waveguide) and be able to move in three directions (X, Y, Z). Angular movement for the optical system is recommended.

AVA Documents Document Sharing Hub
Full document details: IEC 61300-3-53-2020

5.2.3 FFP optical system

As shown in Figure 2, an $f\theta$ lens can directly convert the light from the multimode waveguide to a far field image; however, scaling the far field image in order to fit the image sensor in the imaging device and adjustment of the light intensity in order to prevent saturation is required. The FFP optical system is chosen to operate at the measurement wavelength across the required measurement bandwidth to match that of the detection system. See Annex A for more information.

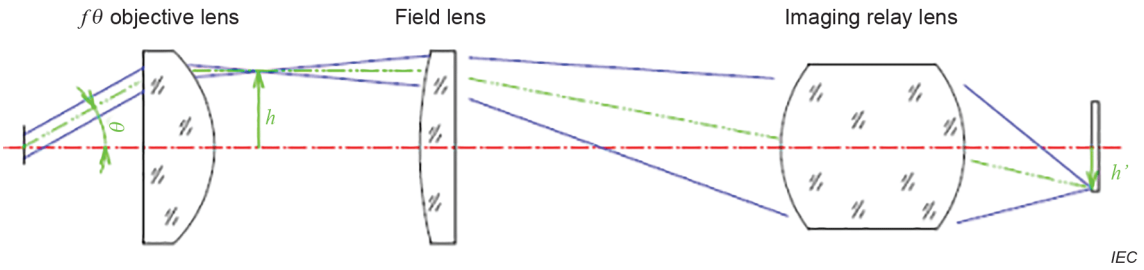

Figure 2 – Far field optical system diagram

5.2.4 Imaging device

Imaging device includes a camera, CCD, CMOS, etc. that can detect images. The detector is typically a charge coupled device (CCD) or a complementary metal oxide semiconductor (CMOS) camera. The type of imaging device shall be chosen by the measurement wavelength. Absolute intensity measurement is not required.

5.2.5 Computer (EAF analyser module)

Since the acquired image contains many thousands of pixels, and the image conversion into encircled angular flux requires substantial computation, a computer is required. The computer shall be connected to the imaging device through an image acquisition board (or with an embedded image acquisition circuit), and beam analysis software which enables the computer as a EAF analyser shall be installed.

5.3 Measurement method 2: direct imaging

5.3.1 General

In this method, far field images are acquired directly by an imaging device without any optical system. The distance between the optical waveguide source under test and the imaging device shall be long enough to achieve Fraunhofer far field.

NOTE A CCD device generally consist of CCD semiconductor tip and micro lens array to get higher sensitivity practically, then the structure generates shading effect which is incident angle dependent sensitivity consequently. For more information, see Annex C and Figure 3.

See detail information of imaging device setup in Annex B.

When the far field image is larger than the area of the imaging device, multiple images shall be taken and stitched together to configure a complete far field image.

5.3.2 Micro-positioner

Both the input multimode waveguide source and the photo detector (PD) shall be mounted on motorized translation Astages. The motorized translation stages shall operate for both coarse alignment with tenths millimetres step movement for wide position and accurate alignment with sub-micron step adjustment to maximize the light through the waveguide.

Documents
Document Sharing Hub
Full document details: IEC 61300-3-53-2020

5.3.3 Imaging device

An imaging device includes a camera, CCD, CMOS, etc. that can detect images. An imaging device plane without any lens system shall be placed sufficiently far from the optical source launch multimode waveguide facet so as to be in the Fraunhofer far field.

The imaging device may, for example, be a CCD camera with its lens removed so that the light distribution falls directly on the CCD chip. The lateral position from the optical axis in the far field shall be converted to an angle of divergence from the optical axis. The angle is the arctangent of the ratio of the lateral X or Y position to the distance L. Therefore, considerable care shall be taken to accurately measure L.

5.3.4 Computer, position controller and image acquisition

The computer controls the position of the imaging device (camera) so that the proper image(s) is(are) acquired. If the far field image is too large to shoot an single image, the computerized controller moves the imaging device to the several different positions to acquire multiple images which are finally combined and become one far field image.

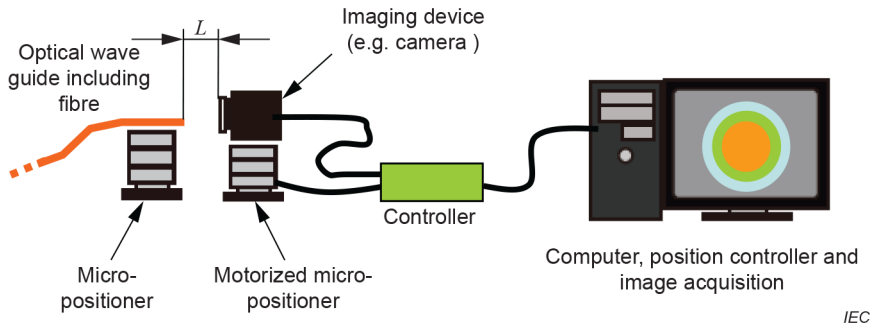

NOTE A CCD device generally consist of CCD semiconductor tip and micro lens array to get higher sensitivity practically, then the structure generates shading effect which is incident angle dependent sensitivity consequently. For more information, see Annex C.

Figure 3 – Apparatus configuration of measurement method 2: direct imaging

6 Sampling and specimens

The sampling and preparation procedures for the light sources which launch light into multimode waveguides to be tested shall be documented. The light sources under test shall have an operating wavelength compatible with the detector and $f\theta$ lens, and have optical connectors or splices compatible with the input port of the apparatus. The construction details of the light sources are not otherwise specified.

7 Geometric calibration

7.1 General

Calibration of the apparatus is critical to the accuracy of this measurement procedure. Calibration shall be performed periodically. If the calibration is known to drift significantly during a measurement interval, the drift of the source(s) shall be identified and eliminated. If the apparatus is disassembled or its components in or affecting the optical path are otherwise manipulated, calibration shall be performed before measurements are made.

The purpose of geometric calibration is to obtain the measurement data needed to compute the conversion factor. The factor shall be used to convert camera coordinates to light launching angle relative to the optical axis of optical waveguide.

Documents
Document Sharing Hub
Full document details: IEC 61300-3-53-2020

7.2 Light source

The calibration light source shall be broadband and incoherent, in order to avoid speckle noise issues, and shall have a sufficiently symmetrical far field distribution so that the calculated centroid of the far field indicates the location of the optical centre axis of the waveguide with sufficient accuracy for the purposes of this document.

7.3 Procedure

Calibration shall be performed to measure the conversion factor that relates the light launching angle to the pixel of the detector corresponding to this angle. The factor has a unit of degree per pixel and shall be used to convert imaging device coordinates to far field angle coordinates. The collimated light source for geometric calibration, shown in Figure 4, shall have a spectral power distribution similar to that of the measurement light source and the central wavelength within 30 nm around the nominal wavelength of the measurement light source.

The calibration procedure is stated below:

Step 1: set a collimated light source whose incident angle relative to the optic axis of the far field optical system can be precisely controlled; and

NOTE An example of the calibration apparatus is shown in Figure 4.

Step 2: measure the conversion factors from the whole range of angles to be measured with an interval small enough (e.g. 1°) to enable accurate interpolation.

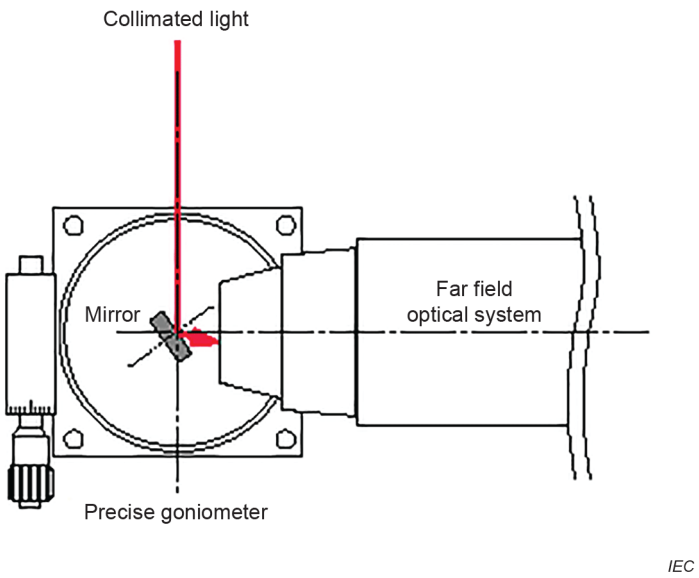

Figure 4 – Calibration apparatus example

8 Measurement procedure

8.1 Safety

All procedures in which a light emitting diode (LED) or a laser source is used as the optical source shall be carried out using safety precautions in accordance with IEC 60825-1.

Documents
Document Sharing Hub
Full document details: IEC 61300-3-53-2020

8.2 Far field image acquisition

8.2.1 General

Acquiring an image is central to the measurement of encircled angular flux. The approach to image acquisition depends on the general characteristics of the light source being measured.

8.2.2 Waveguide end-face alignment

A waveguide end-face shall be placed at the front focal point of the FFP optical system. The live far field image acquired on the computer display shall be adjusted to be in the centre of the display using the X and Y axes of the micro-positioner, and to a minimum diameter and in focus using the Z axis of the micro-positioner in 5.2.2.

8.2.3 Light source image acquisition

Measurement light sources shall be sufficiently incoherent and shall be sufficiently intense to easily get good dynamic range, although attenuation may be required using neutral density (ND) filter(s). The acquired image shall be shown in the PC display as in Figure 5. The picture may be displayed with false colour in Figure 6.

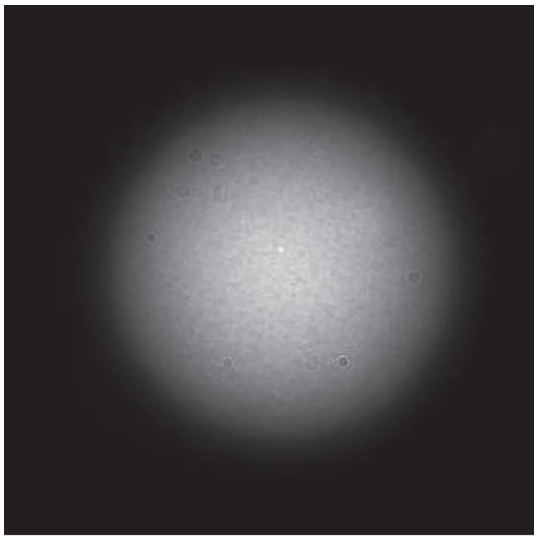

IEC

Figure 5 – Acquired far field image

Documents
Document Sharing Hub

Full document details: IEC 61300-3-53-2020

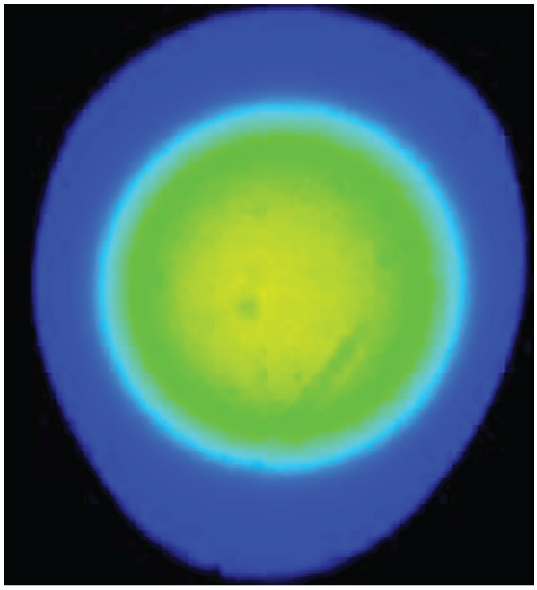

IEC

Figure 6 – Acquired far field image with false colour

8.3 Removal of background noise

The dark current of the camera which is acquired by obscuring the input light beforehand shall be removed from the acquired image, or 0,5 % intensity of the peak power in the acquired image shall be set as a background level.

8.4 Centre determination

8.4.1 General

One of the two methods shall be used.

8.4.2 Method A: Optical centre determination

The encircled angular flux is computed with respect to the optical centroid of the FFP distribution. As shown in Figure 7, the centroid of the acquired image shall be determined with the use of Formula (1).

Documents
Document Sharing Hub

Full document details: IEC 61300-3-53-2020