IEC 61300-3-6

Edition 3.0 2008-12

INTERNATIONAL STANDARD

NORME INTERNATIONALE

Fibre optic interconnecting devices and passive components – Basic test and measurement procedures – Part 3-6: Examinations and measurements – Return loss

Dispositifs d'interconnexion et composants passifs à fibres optiques – Méthodes fondamentales d'essais et de mesures – Partie 3-6: Examens et mesures – Affaiblissement de réflexion

IEC 61300-3-6:2008

Documents
Document Sharing Hub

Full document details: IEC 61300-3-6 2008

THIS PUBLICATION IS COPYRIGHT PROTECTED

Copyright © 2008 IEC, Geneva, Switzerland

All rights reserved. Unless otherwise specified, no part of this publication may be reproduced or utilized in any form or by any means, electronic or mechanical, including photocopying and microfilm, without permission in writing from either IEC or IEC's member National Committee in the country of the requester.
If you have any questions about IEC copyright or have an enquiry about obtaining additional rights to this publication, please contact the address below or your local IEC member National Committee for further information.

Droits de reproduction réservés. Sauf indication contraire, aucune partie de cette publication ne peut être reproduite ni utilisée sous quelque forme que ce soit et par aucun procédé, électronique ou mécanique, y compris la photocopie et les microfilms, sans l'accord écrit de la CEI ou du Comité national de la CEI du pays du demandeur.
Si vous avez des questions sur le copyright de la CEI ou si vous désirez obtenir des droits supplémentaires sur cette publication, utilisez les coordonnées ci-après ou contactez le Comité national de la CEI de votre pays de résidence.

IEC Central Office
3, rue de Varembé
CH-1211 Geneva 20
Switzerland
Email: inmail@iec.ch
Web: www.iec.ch

About the IEC

The International Electrotechnical Commission (IEC) is the leading global organization that prepares and publishes International Standards for all electrical, electronic and related technologies.

About IEC publications

The technical content of IEC publications is kept under constant review by the IEC. Please make sure that you have the latest edition, a corrigenda or an amendment might have been published.

- Catalogue of IEC publications: www.iec.ch/searchpub
The IEC on-line Catalogue enables you to search by a variety of criteria (reference number, text, technical committee,…). It also gives information on projects, withdrawn and replaced publications.
- IEC Just Published: www.iec.ch/online_news/justpub
Stay up to date on all new IEC publications. Just Published details twice a month all new publications released. Available on-line and also by email.
- Electropedia: www.electropedia.org
The world's leading online dictionary of electronic and electrical terms containing more than 20 000 terms and definitions in English and French, with equivalent terms in additional languages. Also known as the International Electrotechnical Vocabulary online.
- Customer Service Centre: www.iec.ch/webstore/custserv
If you wish to give us your feedback on this publication or need further assistance, please visit the Customer Service Centre FAQ or contact us:
Email: csc@iec.ch
Tel.: +41 22 919 02 11
Fax: +41 22 919 03 00

A propos de la CEI

La Commission Electrotechnique Internationale (CEI) est la première organisation mondiale qui élabore et publie des normes internationales pour tout ce qui a trait à l'électricité, à l'électronique et aux technologies apparentées.

A propos des publications CEI

Le contenu technique des publications de la CEI est constamment revu. Veuillez vous assurer que vous possédez l'édition la plus récente, un corrigendum ou amendement peut avoir été publié.

- Catalogue des publications de la CEI: www.iec.ch/searchpub/cur_fut-f.htm
Le Catalogue en-ligne de la CEI vous permet d'effectuer des recherches en utilisant différents critères (numéro de référence, texte, comité d'études,…). Il donne aussi des informations sur les projets et les publications retirées ou remplacées.
- Just Published CEI: www.iec.ch/online_news/justpub
Restez informé sur les nouvelles publications de la CEI. Just Published détaille deux fois par mois les nouvelles publications parues. Disponible en-ligne et aussi par email.
- Electropedia: www.electropedia.org
Le premier dictionnaire en ligne au monde de termes électroniques et électriques. Il contient plus de 20 000 termes et définitions en anglais et en français, ainsi que les termes équivalents dans les langues additionnelles. Egalement appelé Vocabulaire Electrotechnique International en ligne.
- Service Clients: www.iec.ch/webstore/custserv/custserv_entry-f.htm
Si vous désirez nous donner des commentaires sur cette publication ou si vous avez des questions, visitez le FAQ du Service clients ou contactez-nous:
Email: csc@iec.ch
Tél.: +41 22 919 02 11
Fax: +41 22 919 03 00

Documents
Document Sharing Hub

Full document details: IEC 61300-3-6 2008

IEC 61300-3-6

Edition 3.0 2008-12

INTERNATIONAL STANDARD

NORME INTERNATIONALE

Fibre optic interconnecting devices and passive components – Basic test and measurement procedures – Part 3-6: Examinations and measurements – Return loss

Dispositifs d'interconnexion et composants passifs à fibres optiques – Méthodes fondamentales d'essais et de mesures – Partie 3-6: Examens et mesures – Affaiblissement de réflexion

INTERNATIONAL
ELECTROTECHNICAL
COMMISSION

COMMISSION
ELECTROTECHNIQUE
INTERNATIONALE

PRICE CODE
CODE PRIX U

ICS 33.180.20

ISBN 978-2-88910-497-0

® Registered trademark of the International Electrotechnical Commission
Marque déposée de la Commission Electrotechnique Internationale

Documents
Document Sharing Hub

Full document details: IEC 61300-3-6 2008

CONTENTS

FOREWORD 5
1 Scope 7
2 Normative references 7
3 General description 7
3.1 Method 1 8
3.2 Method 2 8
3.3 Method 3 8
3.4 Method 4 8
3.5 Selection of reference measurement method 8
4 Apparatus and symbols 9
4.1 Device under test (DUT) 9
4.2 Method 1: measurements with OCWR 9
4.2.1 Branching device (BD) 10
4.2.2 Detector (D_1, D_2 and D_3) 10
4.2.3 Source (S_1 and S_2) 10
4.2.4 Temporary joint (TJ) 10
4.2.5 Termination (T) 10
4.3 Method 2: measurements with OTDR 11
4.3.1 Optical time domain reflectometer (OTDR) 11
4.3.2 Fibre sections (L_1, L_2, and L_3) 11
4.3.3 Temporary joints (TJ) 11
4.4 Method 3: measurements with OLCR 11
4.4.1 Light source (S) 12
4.4.2 Branching device (BD) 12
4.4.3 Optical delay line (ODL) 12
4.4.4 Optical detector (D) 12
4.4.5 Temporary joint (TJ) 12
4.4.6 Data processing unit 12
4.5 Method 4: measurements with an OFDR 13
4.5.1 RF network analyser 13
4.5.2 Optical heads – Source (S) and receiver (D) 13
4.5.3 Optical variable attenuator (A) (optional) 13
4.5.4 Optical amplifier (OA) (optional) 13
4.5.5 Isolator (I) (optional) 14
4.5.6 Branching device (BD) 14
4.5.7 Temporary joint (TJ) 14
4.5.8 Computer 14
5 Procedure 14
5.1 Launch conditions 14
5.2 Pre-conditioning 14
5.3 DUT output port 14
5.4 Method 1: measurement with OCWR 14
5.4.1 Definition of the OCWR measurement 14
5.4.2 Set-up characterization 15
5.4.3 Measurement procedure 17

AVA Documents
Document Sharing Hub

Full document details: IEC 61300-3-6 2008

5.4.4 Accuracy considerations ... 18
5.5 Method 2: measurement with OTDR ... 18
5.5.1 Definition of the OTDR measurement ... 18
5.5.2 Evaluation of backscattering coefficient ... 19
5.5.3 Measurement procedure ... 20
5.5.4 Accuracy considerations ... 21
5.6 Method 3: measurement with OLCR ... 21
5.6.1 Calibration procedure ... 21
5.6.2 Measurement procedure ... 21
5.6.3 Accuracy considerations ... 22
5.7 Method 4: measurements with OFDR ... 22
5.7.1 Calibration procedure ... 22
5.7.2 Measurement procedure ... 22
5.7.3 Accuracy considerations ... 22
6 Details to be specified ... 23
6.1 Return loss measurement with OCWR ... 23
6.1.1 Reference components ... 23
6.1.2 Branching device ... 23
6.1.3 Detector ... 23
6.1.4 Source ... 24
6.1.5 Temporary joint ... 24
6.1.6 Termination ... 24
6.2 Return loss measurement with OTDR ... 24
6.2.1 Reference components ... 24
6.2.2 OTDR ... 24
6.2.3 L_1, L_2, and L_3 ... 24
6.2.4 Fibre ... 24
6.3 Return loss measurement with OLCR ... 24
6.3.1 Reference components ... 24
6.3.2 Source ... 25
6.3.3 Branching device (BD) ... 25
6.4 Return loss measurement with OFDR ... 25
6.4.1 Reference components ... 25
6.4.2 Vector network analyser ... 25
6.4.3 Branching device ... 25
6.4.4 Source ... 25
6.4.5 Detector ... 25
6.4.6 Optical amplifier (optional) ... 26
6.4.7 Isolator (optional) ... 26
6.4.8 Calibration ... 26
6.5 Measurement procedure ... 26
Annex A (informative) Comparison of return loss detectable by four different methods ... 27

Figure 1 – Measurement set-up of return loss OCWR method ... 9
Figure 2 – Measurement set-up of return loss with OTDR method ... 11
Figure 3 – Measurement set-up of return loss with OLCR method ... 12
Figure 4 – Measurement set-up of return loss with OFDR method ... 13
Figure 5 – Measurement set-up of the system reflected power ... 15

AVA Documents
Document Sharing Hub

Full document details: IEC 61300-3-6 2008

Figure 6 – Measurement set-up of the branching device transfer coefficient 16
Figure 7 – Measurement set-up of the splitting ratio of the branching device 16
Figure 8 – Measurement set-up of return loss with an OCWR 17
Figure 9 – Typical OTDR trace of the response to a reflection..... 19
Figure A.1 – Comparison of detectable return loss, resolution and measurable distance for four return loss measurement methods 27

Table 1 – OTDR parameters for some pulse duration 20
Table 2 – Example of system data and relevant dynamic range..... 23

Documents
Document Sharing Hub

Full document details: IEC 61300-3-6 2008

INTERNATIONAL ELECTROTECHNICAL COMMISSION

FIBRE OPTIC INTERCONNECTING DEVICES AND PASSIVE COMPONENTS – BASIC TEST AND MEASUREMENT PROCEDURES –

Part 3-6: Examinations and measurements – Return loss

FOREWORD

1) The International Electrotechnical Commission (IEC) is a worldwide organization for standardization comprising all national electrotechnical committees (IEC National Committees). The object of IEC is to promote international co-operation on all questions concerning standardization in the electrical and electronic fields. To this end and in addition to other activities, IEC publishes International Standards, Technical Specifications, Technical Reports, Publicly Available Specifications (PAS) and Guides (hereafter referred to as "IEC Publication(s)"). Their preparation is entrusted to technical committees; any IEC National Committee interested in the subject dealt with may participate in this preparatory work. International, governmental and non-governmental organizations liaising with the IEC also participate in this preparation. IEC collaborates closely with the International Organization for Standardization (ISO) in accordance with conditions determined by agreement between the two organizations.
2) The formal decisions or agreements of IEC on technical matters express, as nearly as possible, an international consensus of opinion on the relevant subjects since each technical committee has representation from all interested IEC National Committees.
3) IEC Publications have the form of recommendations for international use and are accepted by IEC National Committees in that sense. While all reasonable efforts are made to ensure that the technical content of IEC Publications is accurate, IEC cannot be held responsible for the way in which they are used or for any misinterpretation by any end user.
4) In order to promote international uniformity, IEC National Committees undertake to apply IEC Publications transparently to the maximum extent possible in their national and regional publications. Any divergence between any IEC Publication and the corresponding national or regional publication shall be clearly indicated in the latter.
5) IEC provides no marking procedure to indicate its approval and cannot be rendered responsible for any equipment declared to be in conformity with an IEC Publication.
6) All users should ensure that they have the latest edition of this publication.
7) No liability shall attach to IEC or its directors, employees, servants or agents including individual experts and members of its technical committees and IEC National Committees for any personal injury, property damage or other damage of any nature whatsoever, whether direct or indirect, or for costs (including legal fees) and expenses arising out of the publication, use of, or reliance upon, this IEC Publication or any other IEC Publications.
8) Attention is drawn to the Normative references cited in this publication. Use of the referenced publications is indispensable for the correct application of this publication.
9) Attention is drawn to the possibility that some of the elements of this IEC Publication may be the subject of patent rights. IEC shall not be held responsible for identifying any or all such patent rights.

International Standard IEC 61300-3-6 has been prepared by subcommittee 86B: Fibre optic interconnecting devices and passive components, of IEC technical committee 86: Fibre optics.

This third edition cancels and replaces the second edition published in 2003. It constitutes a technical revision. The changes with respect to the previous edition are to reconsider the constitution of the document and launch conditions for multimode fibres.

AVA Documents
Document Sharing Hub

Full document details: IEC 61300-3-6 2008

The text of this standard is based on the following documents:

FDIS	Report on voting
86B/2762/FDIS	86B/2792/RVD

Full information on the voting for the approval of this standard can be found in the report on voting indicated in the above table.

This publication has been drafted in accordance with the ISO/IEC Directives, Part 2.

A list of all parts of IEC 61300 series, published under the general title, *Fibre optic interconnecting devices and passive components – Basic test and measurement procedures* can be found on the IEC website.

The committee has decided that the contents of this publication will remain unchanged until the maintenance result date indicated on the IEC web site under "http://webstore.iec.ch" in the data related to the specific publication. At this date, the publication will be

- reconfirmed,
- withdrawn,
- replaced by a revised edition, or
- amended.

Documents
Document Sharing Hub

Full document details: IEC 61300-3-6 2008

FIBRE OPTIC INTERCONNECTING DEVICES AND PASSIVE COMPONENTS – BASIC TEST AND MEASUREMENT PROCEDURES –

Part 3-6: Examinations and measurements – Return loss

1 Scope

This part of IEC 61300 presents procedures for the measurement of the return loss (RL) of a fibre optic device under test (DUT).

2 Normative references

The following referenced documents are indispensable for the application of this document. For dated references, only the edition cited applies. For undated references, the latest edition of the referenced document (including any amendments) applies.

IEC 60793-2 (all parts), *Optical fibres – Product specifications*

IEC 61300-1, *Fibre optic interconnecting devices and passive components – Basic test and measurement procedures – Part 1: General and guidance*

IEC 61300-3-1, *Fibre optic interconnecting devices and passive components – Basic test and measurement procedures – Part 3-1: Examinations and measurements – Visual examination*

IEC 61300-3-39, *Fibre optic interconnecting devices and passive components – Basic test and measurement procedures – Part 3-39: Examinations and measurements – PC optical connector reference plug selection*

3 General description

RL, as used in this standard, is the ratio of the power (P_i) incident on, or entering, the DUT to the total power reflected (P_r) by the DUT, expressed in decibels:

$$RL = -10 \times \log\left(\frac{P_r}{P_i}\right) \tag{1}$$

Return loss is a positive number.

Four methods will be presented for measuring optical return loss:

– measurement with an optical continuous wave reflectometer (OCWR) (method 1);
– measurement with an optical time domain reflectometer (OTDR) (method 2);
– measurement with an optical low coherence reflectometer (OLCR) (method 3);
– measurement with an optical frequency domain reflectometer (OFDR) (method 4).

Documents
Document Sharing Hub
Full document details: IEC 61300-3-6 2008

These four measurement methods have different characteristics and different applications in terms of spatial resolution and detectable RL (in Annex A, a comparison of return loss detectable by the four different methods is reported).

3.1 Method 1

This technique is the nearest to the theoretical definition of return loss given by equation (1). It measures directly the incident power and the reflected power. It is not affected by instrumental data processing and it gives absolute measurement values, which are not relative to a reference reflection (technique A). This method has some limiting factors: it cannot spatially resolve two different reflections on the line and its dynamic range is limited by the characteristics of the branching device and by the ability to suppress the reflections beyond the one from the DUT.

3.2 Method 2

This method allows measurement of RL from reflection points on an optical line, with a spatial resolution in the metre range and with a dynamic range of more than 75 dB (depending on the pulse width) using an OTDR instrument.

3.3 Method 3

The purpose of this method is to measure reflection profiles of single-mode optical devices with a micrometre spatial resolution and a high dynamic range (> 90 dB) by using optical low-coherence interference.

The reflection profile is defined as a distribution of reflections at individual end-faces and/or connected points in single-mode optical devices. When the reflection at a particular point is $-R$ (dB), the return loss at this point is given by R (dB). This method measures the reflection at a point by detecting the power of a beat signal produced by optical interference between the reflected light and the reference light. When a component with dispersed reflections is analysed, each reflection can be identified and located, provided their separation is greater than the spatial resolution of the measurement system.

3.4 Method 4

The purpose of this procedure is to measure the return loss of single-mode optical devices with a spatial resolution in the centimetre range and high dynamic range (> 70 dB) by using optical frequency domain reflectometry.

One of the prime benefits of this technique is the ability to spatially resolve the desired reflection from undesired ones, such as all of the connectors or unterminated ports on the DUT, without any dead zone. Moreover, the OFDR method is highly reliable and the apparatus can be compact.

Measurement in the frequency domain is based on the ability to convert information in the time domain by means of an inverse Fourier transform. In this way, with a source modulated from some kHz to 1 GHz, it is possible to resolve two reflective points on an optical line separated by some centimetres.

3.5 Selection of reference measurement method

Due to the different characteristics of these methods, and their different application fields, the reference method depends on the type of DUT. For a component with RL ≤ 55 dB, the reference is method 1, for a component with RL > 55 dB, the reference is method 2 using a pulse duration less than 100 ns. In cases in which it is necessary to resolve more reflection points separated by a distance of less than 5 m, the reference shall be method 3.

Documents
Document Sharing Hub

Full document details: IEC 61300-3-6 2008

4 Apparatus and symbols

4.1 Device under test (DUT)

Where the DUT is the mounted connector on one end of a component, the reference mating plug shall be considered one-half of the DUT connection on the temporary joint (TJ) side and have the same end-face finish and minimum performance as the connectors to be measured.

Where the DUT is an entire component assembly terminated with pigtails with or without connectors, reference plugs with pigtails and, as required, reference adapters are to be added to those ports with connector terminations so as to form complete connector assemblies with pigtails. Reference mating plugs shall then be considered one-half of the TJ and have the same end-face finish and minimum performance as the connectors to be measured. All unused ports shall be terminated as stated in 4.2.5.

Unless otherwise specified, reference plugs shall meet the requirements of IEC 61300-3-39. The reference adapters shall meet the appropriate IEC connector interface dimensions and ensure a high degree of repeatability and reproducibility. It is recommended that the test adapters be tested and visually inspected after every 100 matings and replaced after 500 matings.

4.2 Method 1: measurements with OCWR

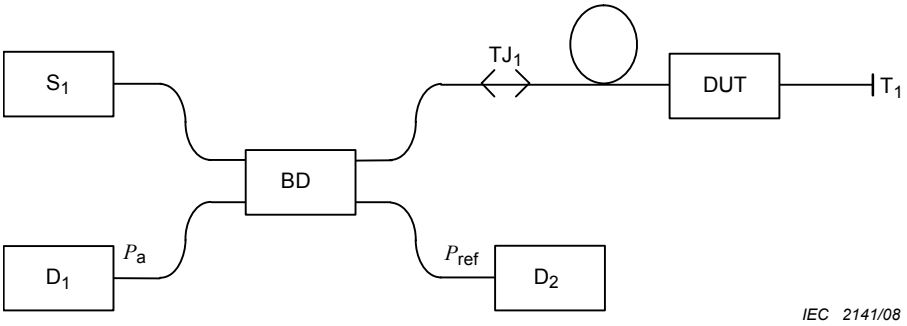

Figure 1 – Measurement set-up of return loss OCWR method

The circuit in Figure 1 is representative of, but is not the only circuit that may be used for OCWR return loss measurement. The requirements are that the values measured satisfy the following two conditions:

– P_a (power measured by the detector D_1) shall be proportional to the power reflected from the DUT, P_r, plus the reflected power originating in the measurement circuit outside of the DUT, P_0:

$$P_a = C_1 \times P_r + P_0 \qquad \text{(mW)} \tag{2}$$

– P_{ref} (power measured by the detector D_2) shall be proportional to the power incident on the DUT, P_i:

$$P_{ref} = C_2 \times P_i \qquad \text{(mW)} \tag{3}$$

where

P_r is the power reflected from the DUT (equation (1));

P_i is the power incident on the DUT (equation (1));

P_0 is the system reflected power originating in the measurement circuit;

C_1 is the branching device transfer coefficient;

Documents
Document Sharing Hub
Full document details: IEC 61300-3-6 2008

C_2 is the splitting ratio of the branching device.

The following is a list of the apparatus and components used in the measurement of return loss using an OCWR (see Figure 1).

4.2.1 Branching device (BD)

The splitting ratio of the BD shall be stable and be insensitive to polarization (< 0,1 dB). The directivity shall be at least 10 dB higher than the maximum return loss to be measured (see 5.4.4).

4.2.2 Detector (D_1, D_2 and D_3)

The detector used consists of an optical detector, the associated electronics, and a means of connecting to an optic fibre. The optical connection may be a receptacle for an optical connector, a fibre pigtail or a bare fibre adapter.

The detectors linearity needs to be specified and sufficient for the dynamic range of the measurements to be undertaken. Since all of the measurements are differential, however, it is not necessary that the calibration be absolute. Care shall be taken to suppress the reflected power from the detector D_2 during the measurement.

Where, during the sequence of measurements, a detector is disconnected and reconnected, the coupling efficiency for the two measurements shall be maintained.

4.2.3 Source (S_1 and S_2)

The source consists of an optical emitter, associated drive electronics, an excitation unit, and a fibre connector or fibre pigtail. A second source S_2 may be used for calibration, as illustrated in Figure 6. Where a second source is used, the central wavelength and spectral width of S_2 shall be the same as S_1.

4.2.4 Temporary joint (TJ)

A temporary joint is a joint that is made to connect the DUT into the measurement circuit. Examples of temporary joints are a connector, splice, vacuum chuck or micro-manipulator. The loss of the TJ shall be stable and the TJ shall have a return loss of at least 10 dB greater than the maximum return loss to be measured (see 5.4.4).

Where a return loss greater than 50 dB is to be measured, a fusion splice is advised in order to guarantee the prescribed measurement precision.

4.2.5 Termination (T)

Fibre terminations marked T shall have a high return loss. Three types of terminations are suggested:

– angled fibre ends: the value of the angle depends on the fibre type; however, it shall be higher than 12°;
– the application of an index match material to the fibre end;
– attenuation in the fibre, for example, with a mandrel wrap (not applicable to multimode fibre).

Where attenuation is used as a termination, it may be applied between components. For example, the measurement of P_0 in Figure 5 may be made by applying attenuation between TJ_1 and the DUT in Figure 8.

The fibre termination shall have a return loss of at least 20 dB greater than the maximum return loss to be measured.

AVA Documents
Document Sharing Hub

Full document details: IEC 61300-3-6 2008

Where a return loss greater than 50 dB is to be measured, the “attenuation in the fibre” termination technique is advised in order to guarantee the prescribed measurement precision.

4.3 Method 2: measurements with OTDR

The measurement set-up for the RL measurement using an OTDR is shown in Figure 2. The following is a list of the apparatus and components used in the measurement.

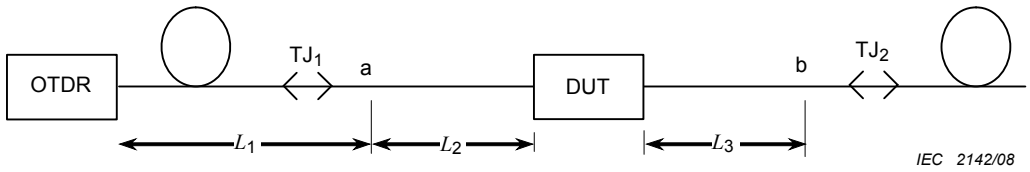

Figure 2 – Measurement set-up of return loss with OTDR method

Another implementation is possible based on comparing the OTDR reflection from the DUT to a calibrated or known return loss.

4.3.1 Optical time domain reflectometer (OTDR)

An instrument able to measure the optical power backscattered along a fibre as a function of time. With this instrument, it is possible to measure several characteristics of an optical line (attenuation, splice loss, splice location, fibre uniformity, breaks) by looking at the fibre from only one end. The return loss from a discontinuity in the fibre is one of the parameters that can be measured.

An attenuator at the OTDR receiver input may be required to reduce the optical power to a level that does not saturate the OTDR receiver (see 5.5.4).

4.3.2 Fibre sections (L_1, L_2, and L_3)

Sections of fibre that are to be included in an OTDR measurement. Section L_1 is required by most OTDRs to provide separation between the OTDR and the events to be measured. Sections L_2 and L_3 provide the space required for the OTDR to resolve the measurement of the return loss of the DUT. The fibre between points “a” and “b” shall have the same backscatter coefficient (see equation (15)).

Where the DUT is terminated with connectors, the connectors are part of the DUT, they shall fall between sections L_2 and L_3.

4.3.3 Temporary joints (TJ)

A temporary joint is a joint that is made to connect the DUT into the measurement circuit. Examples of temporary joints are a connector, splice, vacuum chuck, or micromanipulator. The temporary joints shall be out of the “a”-“b” zone. The loss of the TJ shall be stable and shall have an RL sufficiently high that it does not affect the OTDR trace in the measurement zone.

In the case in which the temporary joints TJ_1 or TJ_2 fall between “a” and “b”, the absolute value of the loss of these joints as measured by a one-way OTDR measurement shall be less than 0,10 H (see 5.5.4). To obtain this low loss value, it may be necessary to work with several different fibre combinations to match the backscatter characteristics of the pigtails attached to the DUT.

4.4 Method 3: measurements with OLCR

The description of the apparatus shown in Figure 3 indicates only the principle of the method.

AVA Documents
Document Sharing Hub

NOTE A practical measuring system needs to use various modifications, for example, to make a measurement independently of the state of polarization of the returning signal.

The apparatus consists of the following.

4.4.1 Light source (S)

The source is a broadband light source (LED edge emitting) with a fibre output.

4.4.2 Branching device (BD)

The BD splits light power from the source to the signal and reference ports and couples light power from those ports into the detector.

4.4.3 Optical delay line (ODL)

The ODL changes the time delay of the reference light linearly.

A conventional ODL is composed of a collimator (L) to make the light beam parallel, and a reflector (R) mounted on a translation stage.

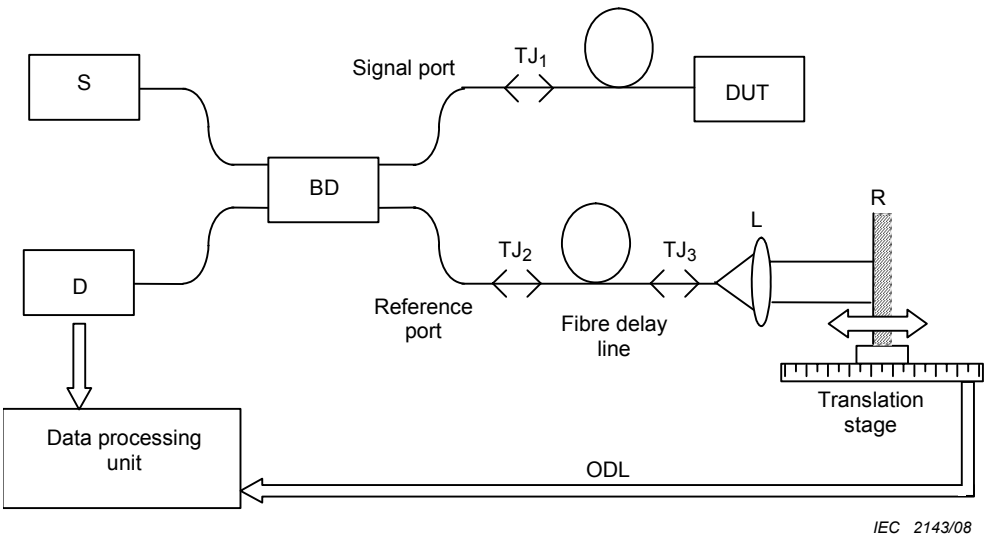

Figure 3 – Measurement set-up of return loss with OLCR method

4.4.4 Optical detector (D)

The detector shall be connected to an output end of the branching device.

A detector shall be used, which has sufficient dynamic range. The photocurrent of the detector is fed into the data processing unit.

4.4.5 Temporary joint (TJ)

A temporary joint is a joint that is made to connect the DUT into the measurement circuit. Examples of temporary joints are a connector, splice, vacuum chuck, or micro-manipulator. The loss of the TJ shall be stable.

4.4.6 Data processing unit

The data processing unit collects and processes data from D and controls the optical delay of the reference light.

Documents
Document Sharing Hub
Full document details: IEC 61300-3-6 2008

4.5 Method 4: measurements with an OFDR

The experimental set-up using the OFDR is illustrated in Figure 4 and is formed by the following components.

4.5.1 RF network analyser

The RF network analyser is a vector network analyser able to measure both the intensity and the phase of the reflected power. The RF frequency drift shall be minimized in line with the measurement accuracy.

4.5.2 Optical heads – Source (S) and receiver (D)

An optical emitter at the specified wavelength and an optical detector, both with their properly associated drive electronics and means of connecting to the network analyser and to optical fibres, respectively. The dynamic range of the measurement set-up shall be at least 5 dB greater than the minimum RL to be measured. The system dynamic range is defined as the difference between the largest signal, i.e. 0 dB, and the signal 3 dB above the noise floor as measured in the time domain.

The following factors may give rise to a potential source of errors and could affect the measurement uncertainty:

– laser wavelength drift with the temperature;
– the range in return loss power over which the detector is linear;
– the polarization sensitivity.

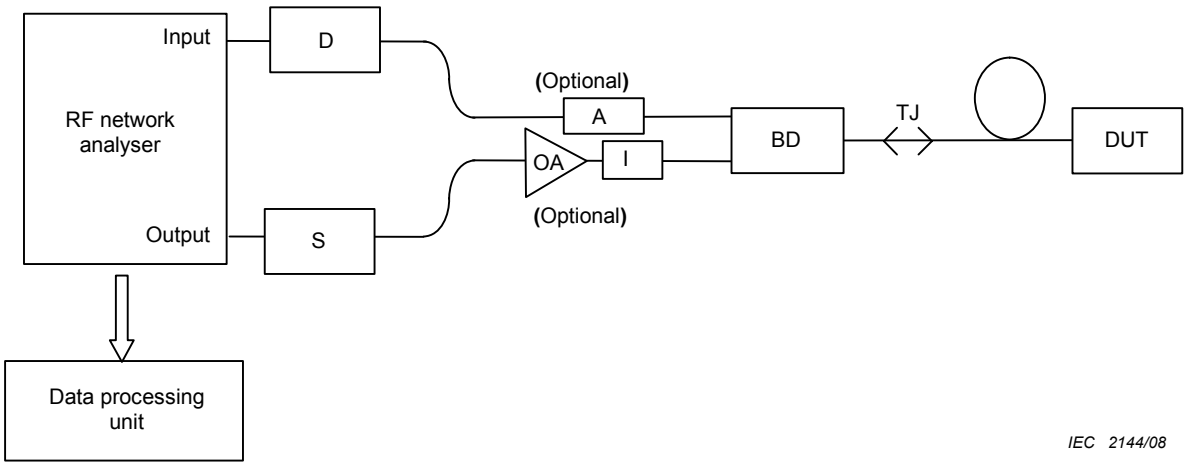

Figure 4 – Measurement set-up of return loss with OFDR method

4.5.3 Optical variable attenuator (A) (optional)

In cases in which the reflection used as reference and the measured one are very different, the optical detector response may not be sufficiently linear over all the measurement range. In this case, it may be necessary to introduce a variable attenuator into the measurement system as shown in Figure 4.

4.5.4 Optical amplifier (OA) (optional)

An optical amplifier, used as a booster, may be added after the source in order to increase the emitted optical power and to enhance the dynamic range of the apparatus.

Documents
Document Sharing Hub
Full document details: IEC 61300-3-6 2008

4.5.5 Isolator (I) (optional)

An optical isolator may be placed in front of the source, if it is not already built in, in order to limit the reflected power which could degrade the source performances.

4.5.6 Branching device (BD)

The splitting ratio is 50 % and the BD is insensitive to the polarization variations (< 0,1 dB).

The directivity of the BD can affect the measurement accuracy and shall be specified accordingly.

4.5.7 Temporary joint (TJ)

A temporary joint is a joint made to connect the DUT to the branching device. Examples of TJs are connectors, splices or micro-manipulators. The loss of the TJ shall be stable with an insertion loss of less than 0,5 dB. The spacing between the TJ and the DUT shall be greater than the resolution of the measurement.

4.5.8 Computer

A computer for performing the inverse Fourier transform on the swept vector will be required if the facility is not included in the network analyser.

5 Procedure

5.1 Launch conditions

The launch condition shall be specified in accordance with Annex B of IEC 61300-1.

Unless otherwise specified, the launch conditions can be obtained by means of a mode filter, the objective of which is to remove unwanted transient higher modes and reduce measurement inaccuracies.

For single-mode measurements, the mode filter shall include two 50 mm diameter loops of fibre.

Mode filters shall be placed between the temporary joint and the DUT.

5.2 Pre-conditioning

If the DUT is the mounted connector on one end of a component, the connector end-face shall be cleaned according to the manufacturer's instructions and visually examined according to IEC 61300-3-1.

5.3 DUT output port

The output ports of the device under test shall be terminated to suppress reflections, particularly when the length of the DUT output fibre is shorter than the spatial resolution of the chosen method.

5.4 Method 1: measurement with OCWR

5.4.1 Definition of the OCWR measurement

The return loss measured using the OCWR method (see equation (10)) is the total return loss between TJ_1 and T_1 as observed from TJ_1 (Figure 1).

Documents
Document Sharing Hub
Full document details: IEC 61300-3-6 2008

Measured values of power P, used in this procedure, are in linear units such as “mW”.

5.4.2 Set-up characterization

In order to perform the measurement, it is necessary to characterize the system by measuring the parameters P_0 and G (defined in the following subclauses: 5.4.2.1 and 5.4.2.2). These parameters are related to the power reflected by the system and to the attenuation of the power reflected from the DUT as it is measured by the detector D_1.

5.4.2.1 Measurement of the system reflected power

System reflected power P_0 is determined using a measurement in which the reflected power from the DUT has been removed.

- Remove the reflected power from the DUT either by replacing the DUT with a termination that has high return loss (Figure 5), or by adding a large attenuation, for example, a mandrel wrap, between the DUT and TJ_1 (Figure 8).

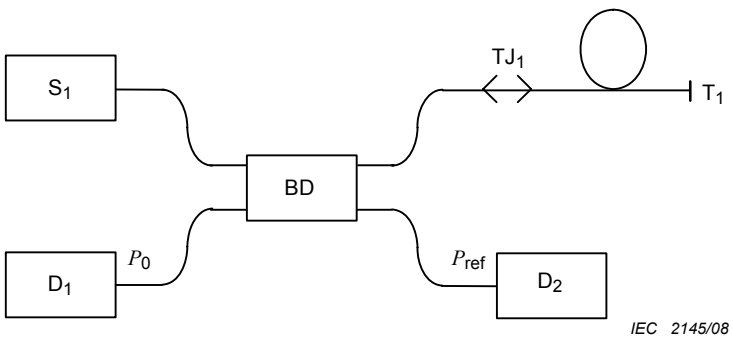

Figure 5 – Measurement set-up of the system reflected power

- The total power reflected (P_0) and the reference power (P_{ref}) are measured by means of the detectors D_1 and D_2.
- The normalized value of the system reflected power is given by:

$$P_0' = \frac{P_0}{P_{ref}} \tag{4}$$

5.4.2.2 Evaluation of the system constant G

Two techniques for evaluating the system constant G are presented.

a) Technique A

- Replace S_1 with a termination T_2, and connect source S_2 in place of T_1. Measure P_{aa}.
- Without turning the source S_2 off, cut the fibre at “cp”, connect detector D_3 and measure P_b.

Documents
Document Sharing Hub
Full document details: IEC 61300-3-6 2008

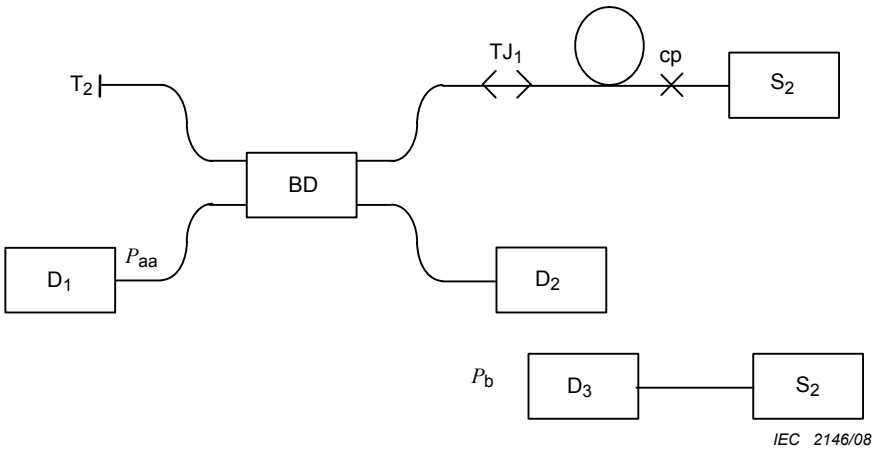

Figure 6 – Measurement set-up of the branching device transfer coefficient

- The factor C_1 is given by:

$$C_1 = \frac{P_{aa}}{P_b} \tag{5}$$

- Connect detector D_3 as shown in Figure 7 and measure P_c and P_R.

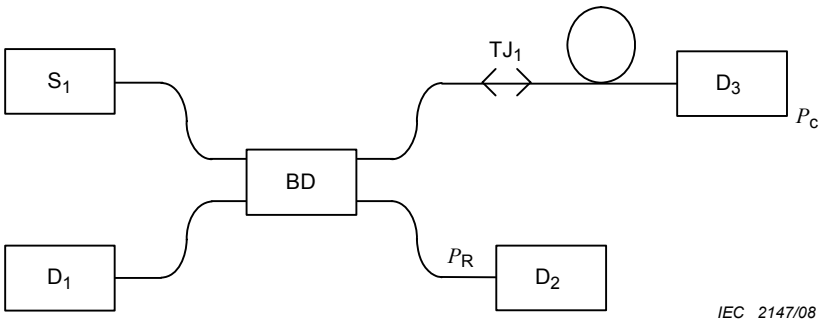

Figure 7 – Measurement set-up of the splitting ratio of the branching device

- The factor C_2 is given by:

$$C_2 = \frac{P_R}{P_c} \tag{6}$$

- The system constant *G* is derived as follows:

$$G = 10 \text{ x} \log\left(\frac{C_1}{C_2}\right) \quad \text{(dB)} \tag{7}$$

Detector calibration – differences in the calibration of the three detectors that are used will cancel if this procedure is followed.

b) Technique B

In this method, the system constant G is based on a termination of known return loss, RL_c.

- Replace the DUT in Figure 1 with a fibre termination of known return loss, RL_c

AVA Documents
Document Sharing Hub
Full document details: IEC 61300-3-6 2008