IEC 61326-2-2

Edition 3.0 2020-10
REDLINE VERSION

INTERNATIONAL STANDARD

colour inside

Electrical equipment for measurement, control and laboratory use – EMC requirements – Part 2-2: Particular requirements – Test configurations, operational conditions and performance criteria for portable testing, measuring and monitoring equipment used in low-voltage distribution systems

IEC 61326-2-2:2020-10 RLV(en)

Documents
Document Sharing Hub

Full document details: IEC 61326-2-2 2020 RLV

THIS PUBLICATION IS COPYRIGHT PROTECTED
Copyright © 2020 IEC, Geneva, Switzerland

All rights reserved. Unless otherwise specified, no part of this publication may be reproduced or utilized in any form or by any means, electronic or mechanical, including photocopying and microfilm, without permission in writing from either IEC or IEC's member National Committee in the country of the requester. If you have any questions about IEC copyright or have an enquiry about obtaining additional rights to this publication, please contact the address below or your local IEC member National Committee for further information.

IEC Central Office
3, rue de Varembé
CH-1211 Geneva 20
Switzerland

Tel.: +41 22 919 02 11
info@iec.ch
www.iec.ch

About the IEC
The International Electrotechnical Commission (IEC) is the leading global organization that prepares and publishes International Standards for all electrical, electronic and related technologies.

About IEC publications
The technical content of IEC publications is kept under constant review by the IEC. Please make sure that you have the latest edition, a corrigendum or an amendment might have been published.

IEC publications search - webstore.iec.ch/advsearchform
The advanced search enables to find IEC publications by a variety of criteria (reference number, text, technical committee,…). It also gives information on projects, replaced and withdrawn publications.

IEC Just Published - webstore.iec.ch/justpublished
Stay up to date on all new IEC publications. Just Published details all new publications released. Available online and once a month by email.

IEC Customer Service Centre - webstore.iec.ch/csc
If you wish to give us your feedback on this publication or need further assistance, please contact the Customer Service Centre: sales@iec.ch.

Electropedia - www.electropedia.org
The world's leading online dictionary on electrotechnology, containing more than 22 000 terminological entries in English and French, with equivalent terms in 16 additional languages. Also known as the International Electrotechnical Vocabulary (IEV) online.

IEC Glossary - std.iec.ch/glossary
67 000 electrotechnical terminology entries in English and French extracted from the Terms and Definitions clause of IEC publications issued since 2002. Some entries have been collected from earlier publications of IEC TC 37, 77, 86 and CISPR.

Documents
Document Sharing Hub

Full document details: IEC 61326-2-2 2020 RLV

IEC 61326-2-2

Edition 3.0 2020-10
REDLINE VERSION

INTERNATIONAL STANDARD

colour inside

Electrical equipment for measurement, control and laboratory use – EMC requirements – Part 2-2: Particular requirements – Test configurations, operational conditions and performance criteria for portable testing, measuring and monitoring equipment used in low-voltage distribution systems

INTERNATIONAL
ELECTROTECHNICAL
COMMISSION

ICS 17.220.20; 25.040.40; 33.100.20

ISBN 978-2-8322-8991-4

Warning! Make sure that you obtained this publication from an authorized distributor.

® Registered trademark of the International Electrotechnical Commission

Documents
Document Sharing Hub

Full document details: IEC 61326-2-2 2020 RLV

CONTENTS

FOREWORD 3
1 Scope 5
2 Normative references 5
3 Terms and definitions 5
4 General 6
5 EMC test plan 6
5.1 General 6
5.2 Configuration of EUT during testing 6
5.3 Operation conditions of EUT during testing 9
5.4 Specification of FUNCTIONAL PERFORMANCE 9
5.5 Test description 9
6 Immunity requirements 9
6.1 Conditions during the tests 9
6.2 Immunity test requirements 10
6.3 Random aspects 10
6.4 Performance criteria 10
7 Emission requirements 10
8 Test results and test report 10
9 Instructions for use 10
Annex A (normative) Immunity test requirements for PORTABLE TEST AND MEASUREMENT EQUIPMENT powered by battery or from the circuit being measured 11
Annex B (informative) Guide for analysis and assessment for electromagnetic compatibility 12
Bibliography 13

Figure 101 – Test set-up for portable testing, measuring and monitoring equipment based on IEC 61000-4-3 7
Figure 102 – Example of connection details for voltage measurements 8
Figure 103 – Example of connection details for current measurements 9

Documents
Document Sharing Hub
Full document details: IEC 61326-2-2 2020 RLV

INTERNATIONAL ELECTROTECHNICAL COMMISSION

ELECTRICAL EQUIPMENT FOR MEASUREMENT, CONTROL AND LABORATORY USE – EMC REQUIREMENTS –

Part 2-2: Particular requirements – Test configurations, operational conditions and performance criteria for portable testing, measuring and monitoring equipment used in low-voltage distribution systems

FOREWORD

1) The International Electrotechnical Commission (IEC) is a worldwide organization for standardization comprising all national electrotechnical committees (IEC National Committees). The object of IEC is to promote international co-operation on all questions concerning standardization in the electrical and electronic fields. To this end and in addition to other activities, IEC publishes International Standards, Technical Specifications, Technical Reports, Publicly Available Specifications (PAS) and Guides (hereafter referred to as "IEC Publication(s)"). Their preparation is entrusted to technical committees; any IEC National Committee interested in the subject dealt with may participate in this preparatory work. International, governmental and non-governmental organizations liaising with the IEC also participate in this preparation. IEC collaborates closely with the International Organization for Standardization (ISO) in accordance with conditions determined by agreement between the two organizations.

2) The formal decisions or agreements of IEC on technical matters express, as nearly as possible, an international consensus of opinion on the relevant subjects since each technical committee has representation from all interested IEC National Committees.

3) IEC Publications have the form of recommendations for international use and are accepted by IEC National Committees in that sense. While all reasonable efforts are made to ensure that the technical content of IEC Publications is accurate, IEC cannot be held responsible for the way in which they are used or for any misinterpretation by any end user.

4) In order to promote international uniformity, IEC National Committees undertake to apply IEC Publications transparently to the maximum extent possible in their national and regional publications. Any divergence between any IEC Publication and the corresponding national or regional publication shall be clearly indicated in the latter.

5) IEC itself does not provide any attestation of conformity. Independent certification bodies provide conformity assessment services and, in some areas, access to IEC marks of conformity. IEC is not responsible for any services carried out by independent certification bodies.

6) All users should ensure that they have the latest edition of this publication.

7) No liability shall attach to IEC or its directors, employees, servants or agents including individual experts and members of its technical committees and IEC National Committees for any personal injury, property damage or other damage of any nature whatsoever, whether direct or indirect, or for costs (including legal fees) and expenses arising out of the publication, use of, or reliance upon, this IEC Publication or any other IEC Publications.

8) Attention is drawn to the Normative references cited in this publication. Use of the referenced publications is indispensable for the correct application of this publication.

9) Attention is drawn to the possibility that some of the elements of this IEC Publication may be the subject of patent rights. IEC shall not be held responsible for identifying any or all such patent rights.

This redline version of the official IEC Standard allows the user to identify the changes made to the previous edition. A vertical bar appears in the margin wherever a change has been made. Additions are in green text, deletions are in strikethrough red text.

Documents
Document Sharing Hub

Full document details: IEC 61326-2-2 2020 RLV

International Standard IEC 61326-2-2 has been prepared by subcommittee 65A: System aspects, of IEC technical committee 65: Industrial-process measurement, control and automation.

This third edition cancels and replaces the second edition published in 2012. This edition constitutes a technical revision.

This edition includes the following significant technical changes with respect to the previous edition:

– update with respect to IEC 61326-1:2020.

The text of this International Standard is based on the following documents:

FDIS	Report on voting
65A/977/FDIS	65A/988/RVD

Full information on the voting for the approval of this International Standard can be found in the report on voting indicated in the above table.

This document has been drafted in accordance with the ISO/IEC Directives, Part 2.

This part of IEC 61326 is to be used in conjunction with IEC 61326-1:2020 and follows the same numbering of clauses, subclauses, tables and figures.

When a particular subclause of IEC 61326-1 is not mentioned in this part, that subclause applies as far as is reasonable. When this standard states “addition”, “modification” or “replacement”, the relevant text in IEC 61326-1 is to be adapted accordingly.

NOTE The following numbering system is used:

– subclauses, tables and figures that are numbered starting from 101 are additional to those in IEC 61326-1;

– unless notes are in a new subclause or involve notes in IEC 61326-1, they are numbered starting from 101 including those in a replaced clause or subclause;

– additional annexes are lettered AA, BB, etc.

A list of all parts of IEC 61326 series, under the general title *Electrical equipment for measurement, control and laboratory use – EMC requirements,* can be found on the IEC website.

The committee has decided that the contents of this document will remain unchanged until the stability date indicated on the IEC website under "http://webstore.iec.ch" in the data related to the specific document. At this date, the document will be

- reconfirmed,
- withdrawn,
- replaced by a revised edition, or
- amended.

IMPORTANT – The 'colour inside' logo on the cover page of this publication indicates that it contains colours which are considered to be useful for the correct understanding of its contents. Users should therefore print this document using a colour printer.

Documents
Document Sharing Hub

Full document details: IEC 61326-2-2 2020 RLV

ELECTRICAL EQUIPMENT FOR MEASUREMENT, CONTROL AND LABORATORY USE – EMC REQUIREMENTS –

Part 2-2: Particular requirements – Test configurations, operational conditions and performance criteria for portable testing, measuring and monitoring equipment used in low-voltage distribution systems

1 Scope

In addition to the scope of IEC 61326-1, this part of IEC 61326 specifies more detailed test configurations, operational conditions and performance criteria for equipment covered by Annex A of IEC 61326-1:2020 which is:

– used for testing, measuring or monitoring of protective measures in low-voltage distribution systems, and;

– powered by battery and/or from the circuit measured, and

– portable.

Examples of such EUTs include, but are not limited to, voltage detectors, insulation testers, earth continuity testers, earth resistance testers, leakage current clamps, loop impedance testers, “residual-current-device-testers” (RCD-testers) and phase sequence testers as defined in IEC 61557 (all parts).

NOTE Particular EMC requirements for equipment covered by IEC 61557-8 and IEC 61557-9 are given in IEC 61326-2-4.

The manufacturer specifies the environment for which the product is intended to be used and/or selects the appropriate test level specifications of IEC 61326-1.

2 Normative references

The following documents are referred to in the text in such a way that some or all of their content constitutes requirements of this document. For dated references, only the edition cited applies. For undated references, the latest edition of the referenced document (including any amendments) applies.

Clause 2 of IEC 61326-1:~~2012~~2020 applies, except as follows:

Addition:

IEC 61326-1:~~2012~~2020, *Electrical equipment for measurement, control and laboratory use – EMC requirements – Part 1: General requirements*

IEC 61557 (all parts), *Electrical safety in low voltage distribution systems up to 1 000 V AC and 1 500 V DC – Equipment for testing, measuring or monitoring of protective measures*

3 Terms and definitions

For the purposes of this document, the terms and definitions given in IEC 61326-1:2020 and IEC 60050-161 apply.

AVA Documents Document Sharing Hub

Full document details: IEC 61326-2-2 2020 RLV

4 General

Clause 4 of IEC 61326-1:2020 applies.

5 EMC test plan

5.1 General

Subclause 5.1 of IEC 61326-1:2020 applies.

5.2 Configuration of EUT during testing

Subclause 5.2 of IEC 61326-1:2020 applies, except as follows:

Addition:

5.2.4.101 Test and measurement I/O ports

Electrostatic discharge shall be applied to ~~the housing, to the terminals of the EUT and to the coupling planes, but not to the inner pins of shielded port or cable connectors (for example, BNC, D-subminiature, IEEE 488 (GPIB), RS232, IEEE 1284-B (parallel printer port), etc.)~~ the mated connector or the shield of the unmated port, but not to the inner pins of shielded port or cable connectors (for example, BNC, D-subminiature, GPIB, RS232, USB, etc.).

For the test according to IEC 61000-4-3, the following conditions shall be met. Test and measurement ports shall be connected with test leads recommended or supplied with the EUT. Where the test leads are unspecified, typical test leads shall be used. The test leads shall be connected and arranged in a typical configuration for each operation mode, according to Figure 101.

If the test leads recommended or supplied are longer than 1 m, each one should be bundled ~~up~~ so that the test ~~or measurement~~ object is in a ~~(~~horizontal~~)~~ distance of 1 m to the EUT.

The test leads shall be arranged 0,1 m apart in a horizontal position on the test table.

Documents
Document Sharing Hub

Full document details: IEC 61326-2-2 2020 RLV

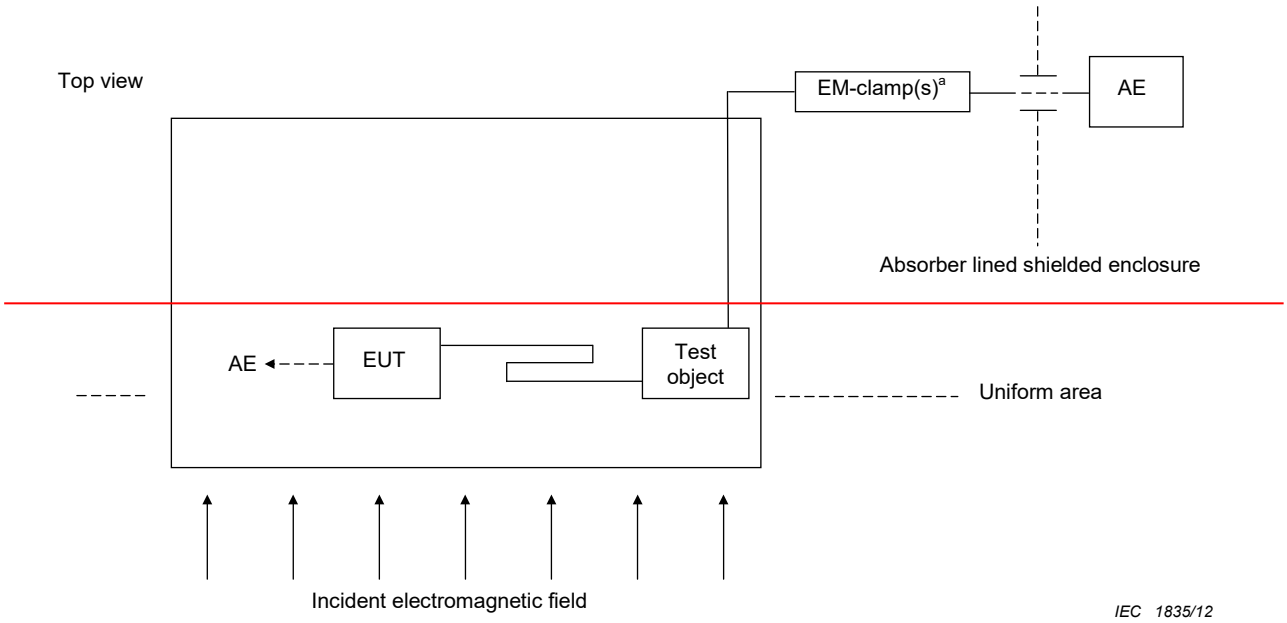

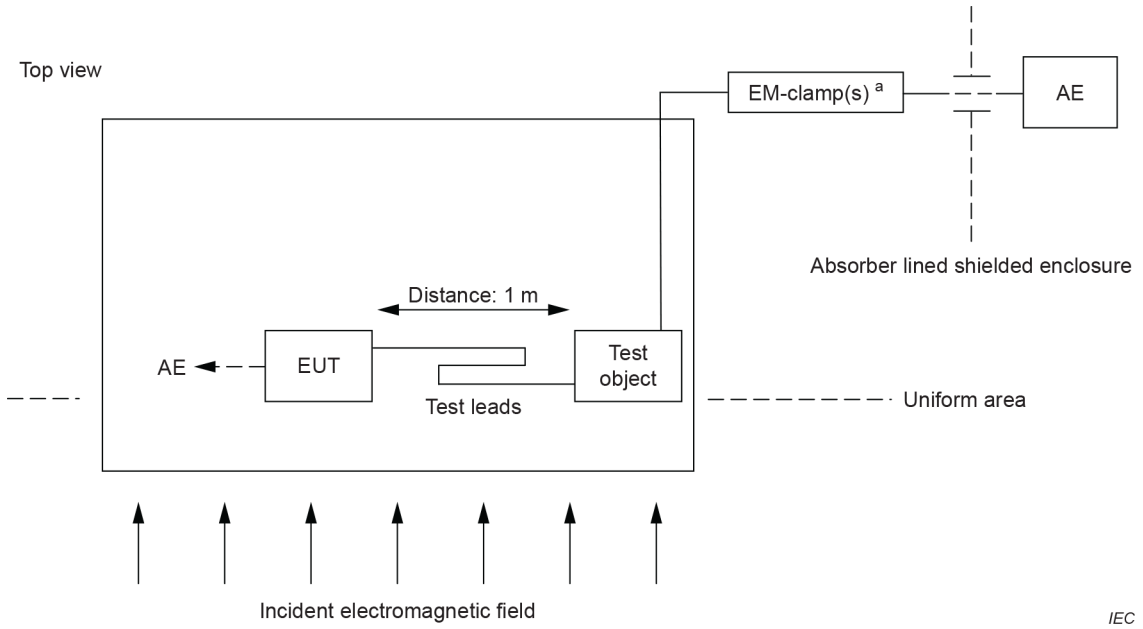

[a] EM-clamp(s) (if necessary).

Figure 101 – Test set-up for portable testing, measuring and monitoring equipment based on IEC 61000-4-3

AUXILIARY EQUIPMENT (AE) required for generating or monitoring the test object signal shall be connected according to Figure 101 via EM-clamps if necessary as described in IEC 61000-4-6:2013, Clause A.3.

Voltage measurements shall be made with a 1 000 Ω ± 100 Ω resistor (test object) connected in series with one of the test leads as shown in Figure 102.

For other measurements, the test object shall be specified by the manufacturer and documented in the test report.

Documents
Document Sharing Hub
Full document details: IEC 61326-2-2 2020 RLV

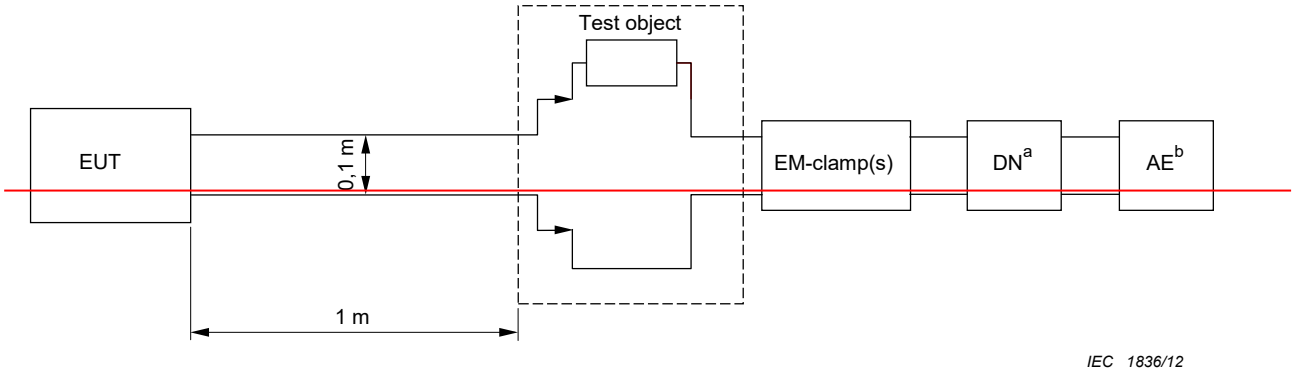

Dimensions in millimetres

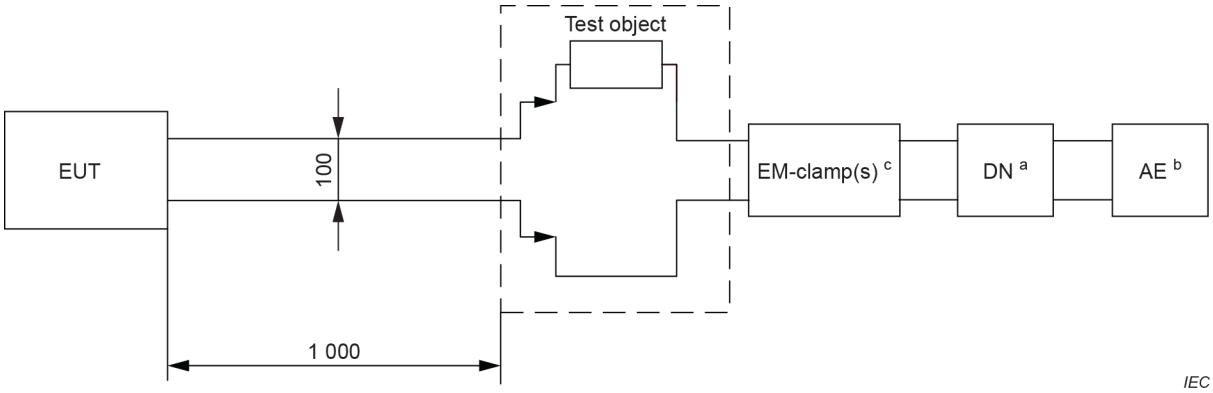

[a] Decoupling network (if necessary)

[b] Auxiliary equipment (for example, voltage source)

[c] EM-clamp(s) (if necessary)

Figure 102 – Example of connection details for voltage measurements

Current measurements shall be made with a 100 Ω ± 10 Ω resistor (test object) connected in parallel with the test leads as shown in Figure 103.

Documents
Document Sharing Hub
Full document details: IEC 61326-2-2 2020 RLV

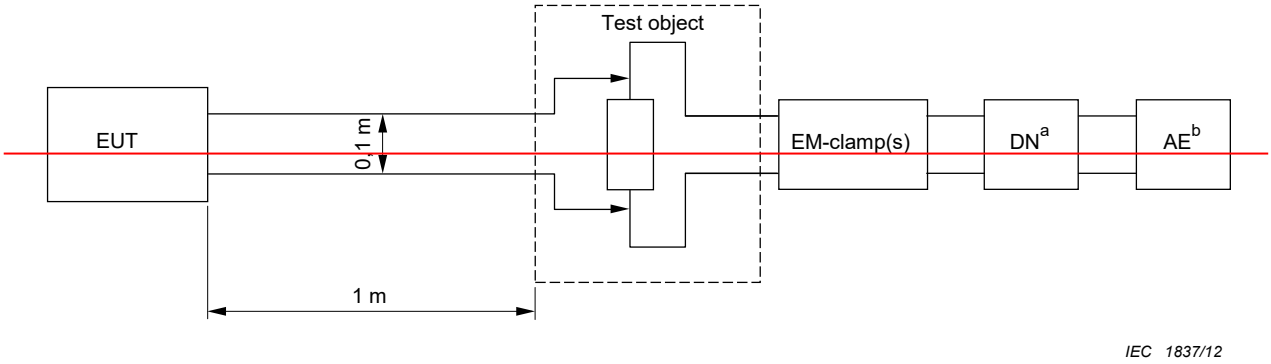

Dimensions in millimetres

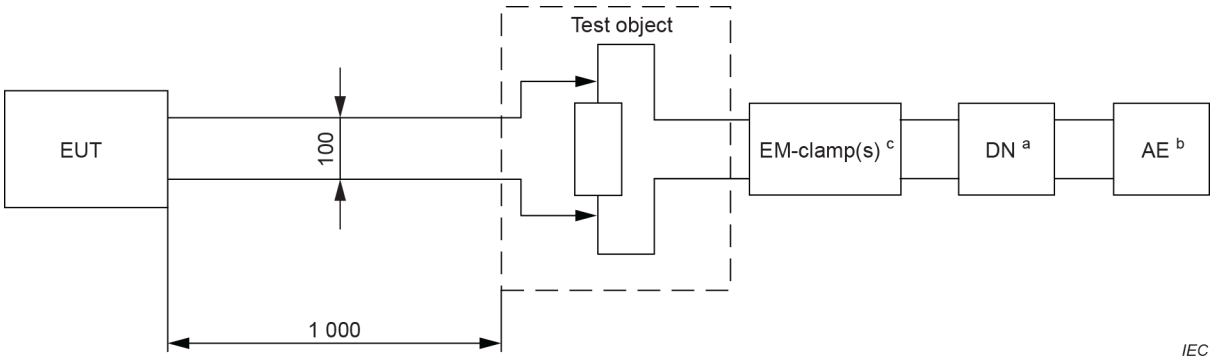

[a] Decoupling network (if necessary)

[b] Auxiliary equipment (for example, current source)

[c] EM-clamp(s) (if necessary)

Figure 103 – Example of connection details for current measurements

5.3 Operation conditions of EUT during testing

Subclause 5.3 of IEC 61326-1:2020 applies, except as follows:

Addition:

5.3.101 Operational conditions

Test and measurement equipment shall be set to the most sensitive ranges or combination of ranges unless other ranges are known to provide worst-case immunity results within normal application. Each function of multifunctional equipment shall be tested separately.

5.4 Specification of FUNCTIONAL PERFORMANCE

Subclause 5.4 of IEC 61326-1:2020 applies.

5.5 Test description

Subclause 5.5 of IEC 61326-1:2020 applies.

6 Immunity requirements

6.1 Conditions during the tests

Subclause 6.1 of IEC 61326-1:2020 applies.

Documents
Document Sharing Hub
Full document details: IEC 61326-2-2 2020 RLV

6.2 Immunity test requirements

Subclause 6.2 of IEC 61326-1:2020 is replaced by the following:

Table A.1 of IEC 61326-1:2020 gives the immunity requirements for equipment covered by the scope of this document.

Addition:

6.2.101 Electromagnetic field

If the maximum dimension of the equipment enclosure is <0,3 m, the test is performed from only one side in accordance with Figure 101 and noted in the test report.

6.3 Random aspects

Subclause 6.3 of IEC 61326-1:2020 applies.

6.4 Performance criteria

Subclause 6.4 of IEC 61326-1:2020 applies, except as follows:

~~*Replacement for 6.4.2 of IEC 61326-1:*~~

Addition:

6.4.2.101 Performance criterion A

During testing, normal performance within the specification limits~~. This~~ includes~~ that~~ permitted variations~~ are allowed~~ outside the maximum intrinsic~~ error~~ uncertainty documented in the technical data of the instructions for use. The variations shall be limited to five times the intrinsic~~ error~~ uncertainty but not more than ±20 % of the measured value when measured at between 50 % and 100 % of full scale.

7 Emission requirements

Clause 7 of IEC 61326-1:2020 applies.

8 Test results and test report

Clause 8 of IEC 61326-1:2020 applies.

9 Instructions for use

Clause 9 of IEC 61326-1:2020 applies.

AVA Documents
Document Sharing Hub

Full document details: IEC 61326-2-2 2020 RLV

Annex A
(normative)

Immunity test requirements for PORTABLE TEST AND MEASUREMENT EQUIPMENT powered by battery or from the circuit being measured

Annex A of IEC 61326-1:2020 does not apply.

Documents
Document Sharing Hub

Full document details: IEC 61326-2-2 2020 RLV