IEC 61331-1

Edition 2.0 2014-05

INTERNATIONAL STANDARD

NORME INTERNATIONALE

Protective devices against diagnostic medical X-radiation – Part 1: Determination of attenuation properties of materials

Dispositifs de protection radiologique contre les rayonnements X pour diagnostic médical – Partie 1: Détermination des propriétés d'atténuation des matériaux

IEC 61331-1:2014-05(en-fr)

Documents
Document Sharing Hub
Full document details: IEC 61331-1 2014

THIS PUBLICATION IS COPYRIGHT PROTECTED

Copyright © 2014 IEC, Geneva, Switzerland

All rights reserved. Unless otherwise specified, no part of this publication may be reproduced or utilized in any form or by any means, electronic or mechanical, including photocopying and microfilm, without permission in writing from either IEC or IEC's member National Committee in the country of the requester. If you have any questions about IEC copyright or have an enquiry about obtaining additional rights to this publication, please contact the address below or your local IEC member National Committee for further information.

Droits de reproduction réservés. Sauf indication contraire, aucune partie de cette publication ne peut être reproduite ni utilisée sous quelque forme que ce soit et par aucun procédé, électronique ou mécanique, y compris la photocopie et les microfilms, sans l'accord écrit de l'IEC ou du Comité national de l'IEC du pays du demandeur. Si vous avez des questions sur le copyright de l'IEC ou si vous désirez obtenir des droits supplémentaires sur cette publication, utilisez les coordonnées ci-après ou contactez le Comité national de l'IEC de votre pays de résidence.

IEC Central Office
3, rue de Varembé
CH-1211 Geneva 20
Switzerland

Tel.: +41 22 919 02 11
Fax: +41 22 919 03 00
info@iec.ch
www.iec.ch

About the IEC
The International Electrotechnical Commission (IEC) is the leading global organization that prepares and publishes International Standards for all electrical, electronic and related technologies.

About IEC publications
The technical content of IEC publications is kept under constant review by the IEC. Please make sure that you have the latest edition, a corrigenda or an amendment might have been published.

IEC Catalogue - webstore.iec.ch/catalogue
The stand-alone application for consulting the entire bibliographical information on IEC International Standards, Technical Specifications, Technical Reports and other documents. Available for PC, Mac OS, Android Tablets and iPad.

IEC publications search - www.iec.ch/searchpub
The advanced search enables to find IEC publications by a variety of criteria (reference number, text, technical committee,…). It also gives information on projects, replaced and withdrawn publications.

IEC Just Published - webstore.iec.ch/justpublished
Stay up to date on all new IEC publications. Just Published details all new publications released. Available online and also once a month by email.

Electropedia - www.electropedia.org
The world's leading online dictionary of electronic and electrical terms containing more than 30 000 terms and definitions in English and French, with equivalent terms in 14 additional languages. Also known as the International Electrotechnical Vocabulary (IEV) online.

IEC Glossary - std.iec.ch/glossary
More than 55 000 electrotechnical terminology entries in English and French extracted from the Terms and Definitions clause of IEC publications issued since 2002. Some entries have been collected from earlier publications of IEC TC 37, 77, 86 and CISPR.

IEC Customer Service Centre - webstore.iec.ch/csc
If you wish to give us your feedback on this publication or need further assistance, please contact the Customer Service Centre: csc@iec.ch.

A propos de l'IEC
La Commission Electrotechnique Internationale (IEC) est la première organisation mondiale qui élabore et publie des Normes internationales pour tout ce qui a trait à l'électricité, à l'électronique et aux technologies apparentées.

A propos des publications IEC
Le contenu technique des publications IEC est constamment revu. Veuillez vous assurer que vous possédez l'édition la plus récente, un corrigendum ou amendement peut avoir été publié.

Catalogue IEC - webstore.iec.ch/catalogue
Application autonome pour consulter tous les renseignements bibliographiques sur les Normes internationales, Spécifications techniques, Rapports techniques et autres documents de l'IEC. Disponible pour PC, Mac OS, tablettes Android et iPad.

Recherche de publications IEC - www.iec.ch/searchpub

La recherche avancée permet de trouver des publications IEC en utilisant différents critères (numéro de référence, texte, comité d'études,…). Elle donne aussi des informations sur les projets et les publications remplacées ou retirées.

IEC Just Published - webstore.iec.ch/justpublished

Restez informé sur les nouvelles publications IEC. Just Published détaille les nouvelles publications parues. Disponible en ligne et aussi une fois par mois par email.

Electropedia - www.electropedia.org

Le premier dictionnaire en ligne de termes électroniques et électriques. Il contient plus de 30 000 termes et définitions en anglais et en français, ainsi que les termes équivalents dans 14 langues additionnelles. Egalement appelé Vocabulaire Electrotechnique International (IEV) en ligne.

Glossaire IEC - std.iec.ch/glossary
Plus de 55 000 entrées terminologiques électrotechniques, en anglais et en français, extraites des articles Termes et Définitions des publications IEC parues depuis 2002. Plus certaines entrées antérieures extraites des publications des CE 37, 77, 86 et CISPR de l'IEC.

Service Clients - webstore.iec.ch/csc

Si vous désirez nous donner des commentaires sur cette publication ou si vous avez des questions contactez-nous: csc@iec.ch.

Documents
Document Sharing Hub

Full document details: IEC 61331-1 2014

IEC 61331-1

Edition 2.0 2014-05

INTERNATIONAL STANDARD

NORME INTERNATIONALE

Protective devices against diagnostic medical X-radiation – Part 1: Determination of attenuation properties of materials

Dispositifs de protection radiologique contre les rayonnements X pour diagnostic médical – Partie 1: Détermination des propriétés d'atténuation des matériaux

INTERNATIONAL
ELECTROTECHNICAL
COMMISSION

COMMISSION
ELECTROTECHNIQUE
INTERNATIONALE

PRICE CODE
CODE PRIX

T

ICS 11.040.50

ISBN 978-2-8322-1562-3

Warning! Make sure that you obtained this publication from an authorized distributor.
Attention! Veuillez vous assurer que vous avez obtenu cette publication via un distributeur agréé.

AVA Documents
Document Sharing Hub

® Registered trademark of the International Electrotechnical Commission
Marque déposée de la Commission Electrotechnique Internationale

Full document details: IEC 61331-1 2014

CONTENTS

FOREWORD 4
1 Scope 6
2 Normative references 6
3 Terms and definitions 7
4 Methods to determine the ATTENUATION RATIO 7
4.1 General 7
4.2 NARROW BEAM CONDITION 7
4.2.1 General description 7
4.2.2 AIR KERMA RATE measurements 7
4.2.3 RADIATION QUALITIES and RADIATION DETECTOR 8
4.2.4 Signal to noise condition 9
4.2.5 ATTENUATION RATIO evaluation 10
4.3 BROAD BEAM CONDITION 10
4.3.1 General description 10
4.3.2 AIR KERMA RATE measurements 10
4.3.3 RADIATION QUALITIES and RADIATION DETECTOR 10
4.3.4 Signal to noise condition 11
4.3.5 ATTENUATION RATIO evaluation 12
4.4 Inverse BROAD BEAM CONDITION 12
4.4.1 General description 12
4.4.2 AIR KERMA RATE measurements 12
4.4.3 RADIATION QUALITIES and RADIATION DETECTOR 13
4.4.4 Signal to noise condition 14
4.4.5 ATTENUATION RATIO evaluation 14
4.5 Calculation of the ATTENUATION RATIO for photon-emitting radionuclides 14
4.5.1 Equation 14
4.5.2 Decay data 14
4.5.3 Mass ATTENUATION and mass energy-absorption coefficients 14
4.5.4 Verification of the mass- ATTENUATION COEFFICIENTS of the test material 15
5 Determination of ATTENUATION properties 16
5.1 ATTENUATION RATIO 16
5.1.1 Determination 16
5.1.2 Indication 16
5.2 BUILD-UP FACTOR 16
5.2.1 Determination 16
5.2.2 Indication 16
5.3 ATTENUATION EQUIVALENT 16
5.3.1 Determination 16
5.3.2 Indication 17
5.4 LEAD EQUIVALENT 17
5.4.1 Determination 17
5.4.2 Indication 17
5.5 LEAD EQUIVALENT class for a SPECIFIED range of RADIATION QUALITIES 17
5.5.1 Materials 17
5.5.2 Standard thicknesses 17

AVA Documents
Document Sharing Hub

5.5.3 Conditions for assignment to a LEAD EQUIVALENT class 17
5.5.4 Indication 18
5.6 Homogeneity 18
5.6.1 Determination 18
5.6.2 Indication 18
6 Statement of compliance 18
Annex A (informative) Tables of ATTENUATION RATIOS, BUILD-UP FACTORS and first HALF-VALUE LAYERS 19
Bibliography 24
Index of defined terms used in this International Standard 25

Figure 1 – NARROW BEAM CONDITION 9
Figure 2 – BROAD BEAM CONDITION 11
Figure 3 – Inverse BROAD BEAM CONDITION 13

Table 1 – Standard RADIATION QUALITIES for X-RAY BEAMS 15
Table 2 – Standard gamma RADIATION QUALITIES according to ISO 4037-1 16
Table A.1 – ATTENUATION RATIOS F_N of lead thicknesses from 0,125 mm to 2 mm calculated for RADIATION QUALITIES of Table 1 according to the formula given in 4.5.4 20
Table A.2 – BUILD-UP FACTOR B measured for RADIATION QUALITIES of Table 1 according to the formula given in 5.2.1 for lead thicknesses 0,25 mm, 0,35 mm and 0,50 mm 21
Table A.3 – ATTENUATION RATIOS F_N of lead thicknesses from 0,125 mm to 7 mm calculated for RADIATION QUALITIES of Tables 1 and 2 according to the formula given in 4.5.4 21
Table A.4 – First HALF-VALUE LAYERS in mm Al of RADIATION QUALITIES of Table 1 as a function of additional lead filters of different thicknesses in the range from 0,125 mm to 2 mm 22
Table A.5 – First HALF-VALUE LAYERS in mm Cu of RADIATION QUALITIES of Table 1 as a function of additional lead filters of different thicknesses in the range from 0,125 mm to 4 mm 23

Documents
Document Sharing Hub
Full document details: IEC 61331-1 2014

INTERNATIONAL ELECTROTECHNICAL COMMISSION

PROTECTIVE DEVICES AGAINST DIAGNOSTIC MEDICAL X-RADIATION –

Part 1: Determination of attenuation properties of materials

FOREWORD

1) The International Electrotechnical Commission (IEC) is a worldwide organization for standardization comprising all national electrotechnical committees (IEC National Committees). The object of IEC is to promote international co-operation on all questions concerning standardization in the electrical and electronic fields. To this end and in addition to other activities, IEC publishes International Standards, Technical Specifications, Technical Reports, Publicly Available Specifications (PAS) and Guides (hereafter referred to as "IEC Publication(s)"). Their preparation is entrusted to technical committees; any IEC National Committee interested in the subject dealt with may participate in this preparatory work. International, governmental and non-governmental organizations liaising with the IEC also participate in this preparation. IEC collaborates closely with the International Organization for Standardization (ISO) in accordance with conditions determined by agreement between the two organizations.
2) The formal decisions or agreements of IEC on technical matters express, as nearly as possible, an international consensus of opinion on the relevant subjects since each technical committee has representation from all interested IEC National Committees.
3) IEC Publications have the form of recommendations for international use and are accepted by IEC National Committees in that sense. While all reasonable efforts are made to ensure that the technical content of IEC Publications is accurate, IEC cannot be held responsible for the way in which they are used or for any misinterpretation by any end user.
4) In order to promote international uniformity, IEC National Committees undertake to apply IEC Publications transparently to the maximum extent possible in their national and regional publications. Any divergence between any IEC Publication and the corresponding national or regional publication shall be clearly indicated in the latter.
5) IEC itself does not provide any attestation of conformity. Independent certification bodies provide conformity assessment services and, in some areas, access to IEC marks of conformity. IEC is not responsible for any services carried out by independent certification bodies.
6) All users should ensure that they have the latest edition of this publication.
7) No liability shall attach to IEC or its directors, employees, servants or agents including individual experts and members of its technical committees and IEC National Committees for any personal injury, property damage or other damage of any nature whatsoever, whether direct or indirect, or for costs (including legal fees) and expenses arising out of the publication, use of, or reliance upon, this IEC Publication or any other IEC Publications.
8) Attention is drawn to the Normative references cited in this publication. Use of the referenced publications is indispensable for the correct application of this publication.
9) Attention is drawn to the possibility that some of the elements of this IEC Publication may be the subject of patent rights. IEC shall not be held responsible for identifying any or all such patent rights.

International Standard IEC 61331-1 has been prepared by subcommittee 62B: Diagnostic imaging equipment, of IEC technical committee 62: Electrical equipment in medical practice.

This second edition cancels and replaces the first edition of IEC 61331-1, published in 1994. It constitutes a technical revision. This second edition has been adapted to apply to the present technology. In particular, this second edition is consistently applicable to lead- and non-lead-containing materials. The essential changes and extensions are:

– extension of the scope to cover photon-emitting radionuclides;
– improved methods to determine the ATTENUATION RATIO;
– addition of the so-called inverse BROAD BEAM CONDITION;
– addition of a method to calculate the ATTENUATION RATIO of photon-emitting radionuclides;
– definition of new standard X- and gamma RADIATION QUALITIES used for testing;
– addition of the so-called LEAD EQUIVALENT class;

AVA Documents Document Sharing Hub

– tables of ATTENUATION RATIOS, BUILD-UP FACTORS and first HALF-VALUE LAYERS for the standard RADIATION QUALITIES filtered with different thicknesses of lead.

The text of this standard is based on the following documents:

FDIS	Report on voting
62B/936/FDIS	62B/942/RVD

Full information on the voting for the approval of this standard can be found in the report on voting indicated in the above table.

This publication has been drafted in accordance with the ISO/IEC Directives, Part 2.

In this standard, the following print types are used:

– requirements and definitions: roman type;.
– informative material appearing outside of tables, such as notes, examples and references: in smaller type. Normative text of tables is also in a smaller type;
– TERMS DEFINED IN CLAUSE 3 OF THIS STANDARD OR AS NOTED: SMALL CAPS.

The verbal forms used in this standard conform to usage described in Annex H of the ISO/IEC Directives, Part 2. For the purposes of this standard, the auxiliary verb:

– “shall” means that compliance with a requirement or a test is mandatory for compliance with this standard;
– “should” means that compliance with a requirement or a test is recommended but is not mandatory for compliance with this standard;
– “may” is used to describe a permissible way to achieve compliance with a requirement or test.

A list of all parts of the IEC 61331 series, published under the general title *Protective devices against diagnostic medical X-radiation,* can be found on the IEC website.

The committee has decided that the contents of this publication will remain unchanged until the stability date indicated on the IEC web site under "http://webstore.iec.ch" in the data related to the specific publication. At this date, the publication will be

- reconfirmed,
- withdrawn,
- replaced by a revised edition, or
- amended.

Documents
Document Sharing Hub

Full document details: IEC 61331-1 2014

PROTECTIVE DEVICES AGAINST DIAGNOSTIC MEDICAL X-RADIATION –

Part 1: Determination of attenuation properties of materials

1 Scope

This part of IEC 61331 applies to materials in sheet form used for the manufacturing of PROTECTIVE DEVICES against X-RADIATION of RADIATION QUALITIES generated with X-RAY TUBE VOLTAGES up to 400 kV and gamma radiation emitted by radionuclides with photon energies up to 1,3 MeV.

This Part 1 is not intended to be applied to PROTECTIVE DEVICES when these are to be checked for the presence of their ATTENUATION properties before and after periods of use.

This Part 1 specifies the methods of determining and indicating the ATTENUATION properties of the materials.

The ATTENUATION properties are given in terms of:

– ATTENUATION RATIO;
– BUILD-UP FACTOR;
– ATTENUATION EQUIVALENT;

together with, as appropriate, an indication of homogeneity and mass per unit area.

Ways of stating values of ATTENUATION properties in compliance with this part of the International Standard are included.

Excluded from the scope of this International Standard are:

– methods for periodical checks of PROTECTIVE DEVICES, particularly of PROTECTIVE CLOTHING,
– methods of determining ATTENUATION by layers in the RADIATION BEAM, and
– methods of determining ATTENUATION for purposes of protection against IONIZING RADIATION provided by walls and other parts of an installation.

2 Normative references

The following documents, in whole or in part, are normatively referenced in this document and are indispensable for its application. For dated references, only the edition cited applies. For undated references, the latest edition of the referenced document (including any amendments) applies.

IEC 60601-1:2005, *Medical electrical equipment – Part 1: General requirements for basic safety and essential performance*
IEC 60601-1:2005/AMD1:2012

IEC 60601-1-3:2008, *Medical electrical equipment – Part 1-3: General requirements for basic safety and essential performance – Collateral Standard: Radiation protection in diagnostic X-ray equipment*
IEC 60601-1-3:2008/AMD1:2013

IEC/TR 60788:2004, *Medical electrical equipment – Glossary of defined terms*

Documents
Document Sharing Hub
Full document details: IEC 61331-1 2014

Monographie BIPM-5:2013, *Table of Radionuclides*[1]

NISTIR 5632:2004, *Tables of X-Ray Mass Attenuation Coefficients and Mass Energy-Absorption Coefficients (version 1.4)* [on-line, cited 2014-01-30] Available at http://www.nist.gov/pml/data/xraycoef/][2]

3 Terms and definitions

For the purposes of this document, the terms and definitions given in IEC/TR 60788:2004, IEC 60601-1:2005 and IEC 60601-1:2005/AMD 1:2012, IEC 60601-1-3:2008 and IEC 60601-1-3:2008/AMD1:2013 and the following apply.

3.1
ATTENUATION RATIO
ratio of the value of a SPECIFIED RADIATION QUANTITY in the centre of a SPECIFIED RADIATION BEAM of SPECIFIED RADIATION QUALITY, with the attenuating material under consideration outside the beam, to the value at the same position and under the same conditions with this attenuating material placed in the beam

4 Methods to determine the ATTENUATION RATIO

4.1 General

There are four different conditions described in this standard to determine ATTENUATION RATIOS, F:

F_N ATTENUATION RATIO measured with a NARROW BEAM CONDITION (4.2)

F_B ATTENUATION RATIO measured with a BROAD BEAM CONDITION (4.3)

F_{IB} ATTENUATION RATIO measured with an inverse BROAD BEAM CONDITION (4.4)

$F_{N,R}$ ATTENUATION RATIO calculated for a photon-emitting radionuclide, R (4.5)

4.2 NARROW BEAM CONDITION

4.2.1 General description

The ATTENUATION RATIO F_N for a given test material (or test object) shall be measured according to the arrangement for NARROW BEAM CONDITION as shown in Figure 1. This arrangement is designed to measure the ATTENUATION of the X-RAY BEAM only due to primary photons. The probability that secondary photons such as fluorescence photons or Compton scattered photons from the test object reach the RADIATION DETECTOR is minimized. The aperture in the DIAPHRAGM shall be just large enough to produce the smallest beam covering the radiation detector. An additional DIAPHRAGM (number 5 in Figure 1) shall be used to shield the RADIATION DETECTOR from SCATTERED RADIATION produced in the test object. The distance a from the test object to the reference point of the RADIATION DETECTOR on the beam axis shall be at least ten times the diameter d of the detector or ten times the diameter t of the RADIATION BEAM at the distal surface of the test object , whatever is larger, i.e. $a \geq 10 \max(d,t)$. The minimal distance of the wall or the floor from the detector (position 6 in the Figure 1) in the direction of the beam shall be 700 mm.

4.2.2 AIR KERMA RATE measurements

The AIR KERMA RATE shall be measured under three different conditions with the same RADIATION DETECTOR at the same position, where

[1] Bureau International de Poids et Mesures, Pavillon de Breteeuil, F-92310 Sèvres, ISBN 92-822-2204-7 (set).

[2] National Institute of Standards and Technology (NIST), U.S.Department of Commerce.

Documents
Document Sharing Hub

Full document details: IEC 61331-1 2014

$\dot{K}_0$ denotes the AIR KERMA RATE without the test object in the RADIATION BEAM;

$\dot{K}_1$ the AIR KERMA RATE with the test object in the RADIATION BEAM;

$\dot{K}_B$ the AIR KERMA RATE with the test object in the beam replaced by a sheet of material of the same shape with an ATTENUATION RATIO greater than 10^5.

The same constant dose rate of the primary beam shall be used for the three measurements. If the mean dose rate of the primary beam varies by more than 0,2 % during the measurements, a monitor shall be used to normalize the three measurements to the same primary beam dose rate.

4.2.3 RADIATION QUALITIES and RADIATION DETECTOR

The RADIATION QUALITIES used for the measurements shall be selected from Table 1 . The RADIATION DETECTOR shall be calibrated in terms of AIR KERMA. The quotient $\dot{K}_0$ divided by $\dot{K}_1$ shall be known with a relative standard uncertainty not more than 2 %.

NOTE The AIR KERMA RESPONSE of the RADIATION DETECTOR can be measured with e.g. NARROW BEAM qualities and the RESPONSE can be plotted as a function of Al or Cu HALF-VALUE LAYERS (HVL). Tables A.4 and A.5 of this standard can be used to look up the approximate Al or Cu HVL of the non-attenuated and attenuated beams. The AIR KERMA RESPONSE in the actual beam can then be evaluated from the plot.

Documents
Document Sharing Hub
Full document details: IEC 61331-1 2014

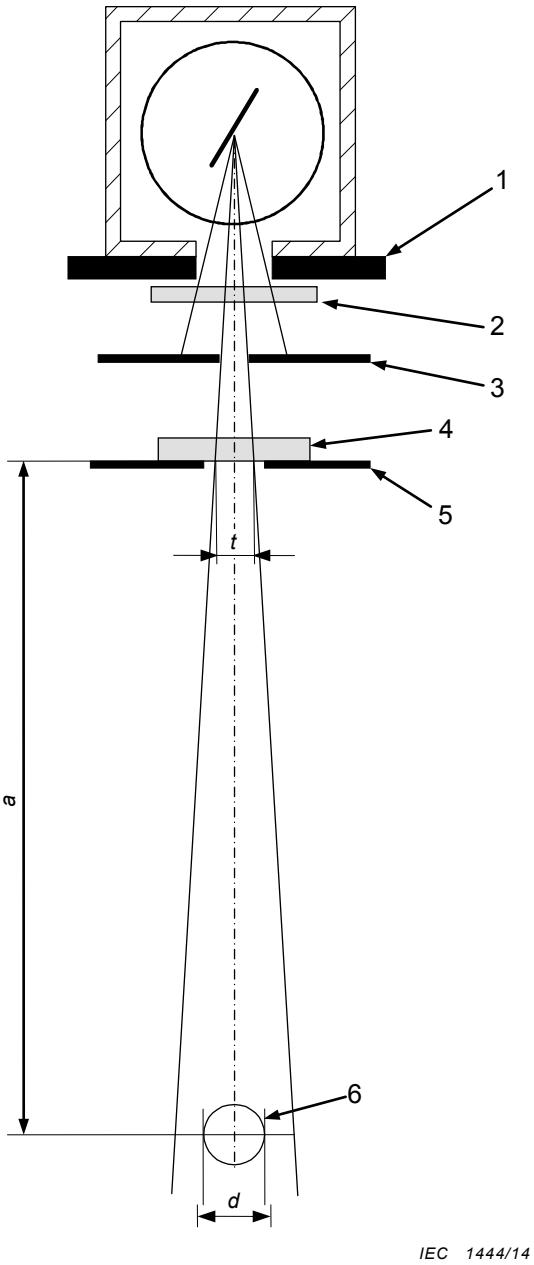

1 DIAPHRAGM
2 Beam filtration
3 Beam-limiting DIAPHRAGM
4 Test object
5 DIAPHRAGM
6 Radiation detector

Condition: $a \geq 10 \max(d,t)$

Figure 1 – NARROW BEAM CONDITION

4.2.4 Signal to noise condition

The following condition shall be fulfilled:

$$\dot{K}_1 \geq 10\dot{K}_B$$

Documents
Document Sharing Hub
Full document details: IEC 61331-1 2014

4.2.5 ATTENUATION RATIO evaluation

The ATTENUATION RATIO F_N shall be evaluated as:

$$F_N = \frac{\dot{K}_0 - \dot{K}_B}{\dot{K}_1 - \dot{K}_B}$$

4.3 BROAD BEAM CONDITION

4.3.1 General description

The ATTENUATION RATIO F_B for a given test material (or test object) shall be measured according to the arrangement for BROAD BEAM CONDITION as shown in Figure 2. This arrangement is designed to measure the ATTENUATION of the x-ray beam if secondary photons emitted by the material sample are included in the detection of the attenuated beam. The probability that secondary photons such as fluorescence photons or Compton scattered photons from the test object reach the RADIATION DETECTOR is maximized. The distance a, from the focal spot to the radiation exit plane of the test object shall be at least three times the diameter d, of the beam limiting aperture, i.e. $a \geq 3d$. The aperture diameter d shall be at least 10 times greater than the distance b, of the reference point of the RADIATION DETECTOR from the surface of the test object, i.e. $d \geq 10b$. b shall be chosen as small as possible in order to minimize the ATTENUATION of secondary photons by the amount of air between the reference point of the RADIATION DETECTOR and the point of emission of the secondary photons from the test object. The distance between the outer wall of the chamber and the surface of the test object shall not exceed 10 mm. The minimal distance of the wall or the floor from the detector (position 6 in Figure 2) in the direction of the beam shall be 700 mm.

4.3.2 AIR KERMA RATE measurements

The AIR KERMA RATE shall be measured under three different conditions with the same RADIATION DETECTOR at the same position, where:

$\dot{K}_0$ denotes the AIR KERMA RATE without the test object in the RADIATION BEAM;

$\dot{K}_1$ the AIR KERMA RATE with the test object in the RADIATION BEAM;

$\dot{K}_B$ the AIR KERMA RATE with the test object in the beam replaced by a sheet of material of the same shape with an ATTENUATION RATIO greater than 10^5.

The same constant dose rate of the primary beam shall be used for the three measurements. If the mean dose rate of the primary beam varies by more than 0,2 % during the measurements a monitor shall be used to normalize the three measurements to the same primary beam dose rate. The dose rate of the primary beam at any point in the plane of the beam-limiting aperture shall not vary by more than 2 %.

4.3.3 RADIATION QUALITIES and RADIATION DETECTOR

The RADIATION QUALITIES given in Table 1 shall be used for the measurements. The RADIATION DETECTOR shall be calibrated in terms of AIR KERMA. The quotient $\dot{K}_0$ divided by $\dot{K}_1$ shall be known with a relative standard uncertainty not more than 2 %. The dependence of the response of the RADIATION DETECTOR upon the direction of incidence shall be negligibly small over a hemisphere. It is recommended to use a spherical ionisation chamber.

NOTE The AIR KERMA RESPONSE of the RADIATION DETECTOR can be measured with e.g. NARROW BEAM qualities and the RESPONSE can be plotted as a function of Al or Cu HALF-VALUE LAYERS (HVL). Tables A.4 and A.5 of this standard can be used to look up the approximate Al or Cu HVL of the non-attenuated and attenuated beams. The AIR KERMA RESPONSE in the actual beam can then be evaluated from the plot.

Documents
Document Sharing Hub
Full document details: IEC 61331-1 2014

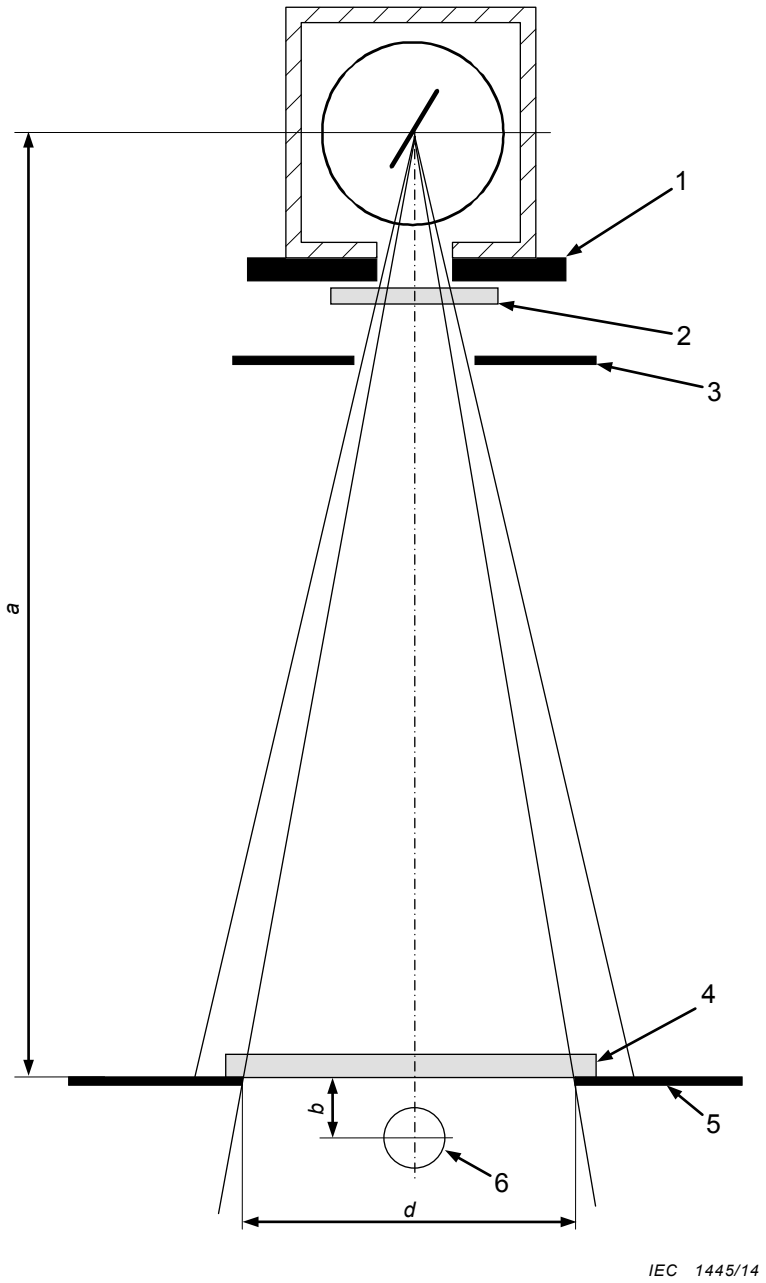

1 DIAPHRAGM
2 Beam filtration
3 DIAPHRAGM
4 Test object
5 Beam-limiting DIAPHRAGM
6 Radiation detector

Conditions: $a \geq 3\,d$, $d \geq 10\,b$

Figure 2 – BROAD BEAM CONDITION

4.3.4 Signal to noise condition

The following condition shall be fulfilled:

$$\dot{K}_1 \geq 10\,\dot{K}_B$$

Documents
Document Sharing Hub
Full document details: IEC 61331-1 2014

4.3.5 ATTENUATION RATIO evaluation

The ATTENUATION RATIO F_B shall be evaluated as:

$$F_B = \frac{\dot{K}_0 - \dot{K}_B}{\dot{K}_1 - \dot{K}_B}$$

4.4 Inverse BROAD BEAM CONDITION

4.4.1 General description

The geometry of the inverse BROAD BEAM shown in Figure 3 is an alternative method to measure the ATTENUATION RATIO F_B. In order to distinguish from the conventional method, it is designated as F_{IB}. In contrast to the conventional method described in 4.2 where a BROAD BEAM impinges on a large area piece of the test object and a small RADIATION DETECTOR closely behind the test object is used, the inverse method is characterized by a NARROW BEAM impinging on a small area piece of the test object and a large area flat RADIATION DETECTOR immediately behind the test object. A flat ionisation chamber shall be used for this purpose. This method has some advantages because it is easy to use, has low measuring uncertainties, need only small field sizes and small sheets of material. It shall be used for the determination of the ATTENUATION properties of materials used for PROTECTIVE CLOTHING and PROTECTIVE DEVICES for gonads in medical x-ray diagnostic described in IEC 61331-3. The method as described here shall not be used for RADIATION QUALITIES with X-RAY TUBE VOLTAGES above 150 kV. The distance *a*, from the focal spot to the entrance plane of the measuring DIAPHRAGM shall not be less than 5 times the diameter of the DIAPHRAGM aperture, *d*, i.e. $a \geq 5\ d$. The test object can be fixed to the exit plane of the measuring DIAPHRAGM. The distance *b*, between the radiation exit plane of the test object and the flat ionisation chamber shall be chosen to be as close as possible. The following condition shall be fulfilled: $D - d \geq 10\ b$. The distance *b* shall not exceed 5 mm. The minimal distance of the wall or the floor from the detector (position 6 in the Figure 3) in the direction of the beam shall be 700 mm.

4.4.2 AIR KERMA RATE measurements

The AIR KERMA RATE shall be measured under three different conditions with the same RADIATION DETECTOR at the same position, where:

$\dot{K}_0$ denotes the AIR KERMA RATE without the test object in the RADIATION BEAM;

$\dot{K}_1$ the AIR KERMA RATE with the test object in the RADIATION BEAM;

$\dot{K}_B$ the AIR KERMA RATE with the test object in the beam replaced by a sheet of material of the same shape with an ATTENUATION RATIO greater than 10^5.

The same constant dose rate of the primary beam shall be used for the three measurements. If the mean dose rate of the primary beam varies by more than 0,2 % during the measurements, a monitor shall be used to normalize the three measurements to the same primary beam dose rate.

Documents
Document Sharing Hub
Full document details: IEC 61331-1 2014

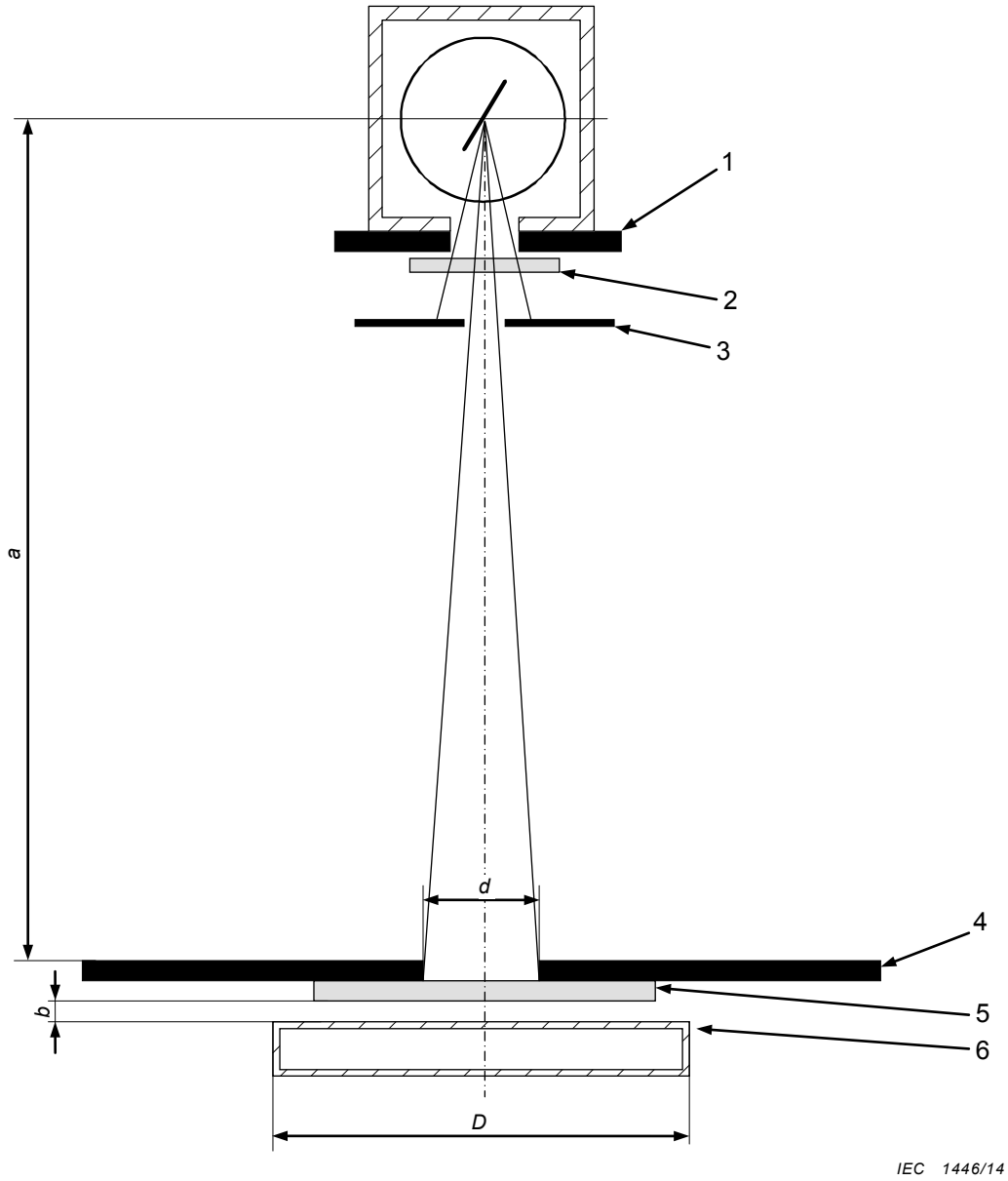

1 DIAPHRAGM

2 Beam filtration

3 DIAPHRAGM

4 Measuring DIAPHRAGM

5 Test object

6 Flat measuring chamber

Conditions: a ≥ 5 *d*, *D* – *d* ≥ 10 *b*, b ≤ 5 mm

Figure 3 – Inverse BROAD BEAM CONDITION

4.4.3 RADIATION QUALITIES and RADIATION DETECTOR

The RADIATION QUALITIES given in Table 1 shall be used for the measurements. The flat ionisation chamber shall be calibrated in terms of AIR KERMA under the same irradiation conditions as used in the measurements. The quotient $\dot{K}_0$ divided by $\dot{K}_1$ shall be known with a relative standard uncertainty not more than 2%.

NOTE The AIR KERMA RESPONSE of the RADIATION DETECTOR can be measured with e.g. NARROW BEAM qualities and the RESPONSE can be plotted as a function of Al HALF-VALUE LAYERS (HVL). Table A.4 of this standard can be

AVA Documents Document Sharing Hub

Full document details: IEC 61331-1 2014

used to look up the approximate Al HVL of the non-attenuated and attenuated beams. The AIR KERMA RESPONSE in the actual beam can then be evaluated from the plot.

4.4.4 Signal to noise condition

The following condition shall be fulfilled:

$$\dot{K}_1 \geq 10\dot{K}_B$$

4.4.5 ATTENUATION RATIO evaluation

The ATTENUATION RATIO F_{IB} shall be evaluated as:

$$F_{IB} = \frac{\dot{K}_0 - \dot{K}_B}{\dot{K}_1 - \dot{K}_B}$$

4.5 Calculation of the ATTENUATION RATIO for photon-emitting radionuclides

4.5.1 Equation

The ATTENUATION RATIO $F_{N,R}$ for a given test material to protect against the photon-emitting radionuclide R shall be calculated according to the following equation:

$$F_{N,R} = \frac{\sum_i \left(\frac{\mu_{en}(E_i)}{\rho}\right)_{air} p(E_i)E_i}{\sum_i \left(\frac{\mu_{en}(E_i)}{\rho}\right)_{air} p(E_i)E_i e^{-\left(\frac{\mu(E_i)}{\rho}\right)_m d\rho}} \quad , \quad E_i \geq 20 \text{ keV}$$

where

E_i	is the energy of the *i*-th photon emitted per decay
$p(E_i)$	is the photon emission probability per decay event for photons with energy E_i
$\left(\frac{\mu_{en}(E_i)}{\rho}\right)_{air}$	is the mass energy-absorption coefficient of air for photons with energy E_i
$\left(\frac{\mu(E_i)}{\rho}\right)_m$	is the mass ATTENUATION COEFFICIENT of the test material for photons with energy E_i
d	is the thickness of the test material
ρ	is the density of the test material

4.5.2 Decay data

Photon energies E_i and photon emission probabilities $p(E_i)$ shall be taken from the Monographie BIPM-5: Table of Radionuclides.

4.5.3 Mass ATTENUATION and mass energy-absorption coefficients

Mass ATTENUATION and mass energy-absorption coefficients shall be taken from NISTIR 5632: Tables of X-Ray Mass Attenuation Coefficients and Mass Energy-Absorption Coefficients.

Documents
Document Sharing Hub
Full document details: IEC 61331-1 2014

4.5.4 Verification of the mass- ATTENUATION COEFFICIENTS of the test material

The test material's mass ATTENUATION COEFFICIENTS used in 4.5.1 shall be verified by comparison of measured values of F_N according to 4.2 with calculated values $F_{N,C}$ according to the procedure described in the following. A set of standard RADIATION QUALITIES of Tables 1 and 2 shall be used which covers approximately the energy range of the photons emitted by the radionuclide. Measurements for the standard gamma RADIATION QUALITIES listed in Table 2 shall be done with a NARROW BEAM CONDITION similar to that shown in Figure 1. The distribution of the photon fluence with respect to the photon energies of the standard RADIATION QUALITIES shall be known for this purpose. The value of F_N of the photon fluence spectra shall be evaluated according to the following formula:

$$F_{N,C} = \frac{\sum_i \left(\frac{\mu_{en}(E_i)}{\rho}\right)_{air} \phi(E_i)E_i}{\sum_i \left(\frac{\mu_{en}(E_i)}{\rho}\right)_{air} \phi(E_i)E_i e^{-\left(\frac{\mu(E_i)}{\rho}\right)_m d\rho}}$$

where

E_i is the energy attributed to the channel i containing all photons with energies between $E_i - \frac{\Delta}{2}$ and $E_i + \frac{\Delta}{2}$

$\phi(E_i)$ is the number of photons contained in channel i

and the other symbols have the same meaning as in the equation of 4.5.1.

The condition $|1 - F_N / F_{N,C}| \leq 0{,}2$ shall be fulfilled for the chosen set of qualities.

Table 1 – Standard RADIATION QUALITIES for X-RAY BEAMS

Tube voltage (nominal)	TOTAL FILTRATION (nominal)		1st HVL (nominal)		AIR KERMA RATE 1 m, 10 mA (approximately)
kV	mm Al	mm Cu	mm Al	mm Cu	mGy/s
30	2,5		0,99		0,1
40	2,5		1,44		0,2
50	2,5		1,81		0,3
60	2,5		2,14		0,4
70	2,5		2,44		0,5
80	2,5		2,77		0,6
90	2,5		3,10		0,8
100	2,5		3,44		0,9
110	2,5		3,79		1,0
120	2,5		4,13		1,2
130	2,5		4,48		1,4
140	2,5		4,82		1,6
150	2,5		5,17		2
200		1,2	14,6	1,63	1
250		1,8	16,8	2,53	1,5
300		2,5	18,6	3,37	2
400		3,5	20,8	4,51	3

AVA Documents
Document Sharing Hub

Full document details: IEC 61331-1 2014