IEC 61338-1

Edition 1.0 2004-11

INTERNATIONAL STANDARD

NORME INTERNATIONALE

Waveguide type dielectric resonators – Part 1: Generic specification

Résonateurs diélectriques à modes guidés – Partie 1: Spécification générique

IEC 61338-1:2004

Documents
Document Sharing Hub

Full document details: IEC 61338-1 2004

THIS PUBLICATION IS COPYRIGHT PROTECTED

Copyright © 2004 IEC, Geneva, Switzerland

All rights reserved. Unless otherwise specified, no part of this publication may be reproduced or utilized in any form or by any means, electronic or mechanical, including photocopying and microfilm, without permission in writing from either IEC or IEC's member National Committee in the country of the requester.
If you have any questions about IEC copyright or have an enquiry about obtaining additional rights to this publication, please contact the address below or your local IEC member National Committee for further information.

Droits de reproduction réservés. Sauf indication contraire, aucune partie de cette publication ne peut être reproduite ni utilisée sous quelque forme que ce soit et par aucun procédé, électronique ou mécanique, y compris la photocopie et les microfilms, sans l'accord écrit de la CEI ou du Comité national de la CEI du pays du demandeur.
Si vous avez des questions sur le copyright de la CEI ou si vous désirez obtenir des droits supplémentaires sur cette publication, utilisez les coordonnées ci-après ou contactez le Comité national de la CEI de votre pays de résidence.

IEC Central Office
3, rue de Varembé
CH-1211 Geneva 20
Switzerland

Tel.: +41 22 919 02 11
Fax: +41 22 919 03 00
info@iec.ch
www.iec.ch

About the IEC

The International Electrotechnical Commission (IEC) is the leading global organization that prepares and publishes International Standards for all electrical, electronic and related technologies.

About IEC publications

The technical content of IEC publications is kept under constant review by the IEC. Please make sure that you have the latest edition, a corrigenda or an amendment might have been published.

Useful links:

IEC publications search - www.iec.ch/searchpub

The advanced search enables you to find IEC publications by a variety of criteria (reference number, text, technical committee,…).
It also gives information on projects, replaced and withdrawn publications.

IEC Just Published - webstore.iec.ch/justpublished

Stay up to date on all new IEC publications. Just Published details all new publications released. Available on-line and also once a month by email.

Electropedia - www.electropedia.org

The world's leading online dictionary of electronic and electrical terms containing more than 30 000 terms and definitions in English and French, with equivalent terms in additional languages. Also known as the International Electrotechnical Vocabulary (IEV) on-line.

Customer Service Centre - webstore.iec.ch/csc

If you wish to give us your feedback on this publication or need further assistance, please contact the Customer Service Centre: csc@iec.ch.

A propos de la CEI

La Commission Electrotechnique Internationale (CEI) est la première organisation mondiale qui élabore et publie des Normes internationales pour tout ce qui a trait à l'électricité, à l'électronique et aux technologies apparentées.

A propos des publications CEI

Le contenu technique des publications de la CEI est constamment revu. Veuillez vous assurer que vous possédez l'édition la plus récente, un corrigendum ou amendement peut avoir été publié.

Liens utiles:

Recherche de publications CEI - www.iec.ch/searchpub

La recherche avancée vous permet de trouver des publications CEI en utilisant différents critères (numéro de référence, texte, comité d'études,…).
Elle donne aussi des informations sur les projets et les publications remplacées ou retirées.

Just Published CEI - webstore.iec.ch/justpublished

Restez informé sur les nouvelles publications de la CEI. Just Published détaille les nouvelles publications parues. Disponible en ligne et aussi une fois par mois par email.

Electropedia - www.electropedia.org

Le premier dictionnaire en ligne au monde de termes électroniques et électriques. Il contient plus de 30 000 termes et définitions en anglais et en français, ainsi que les termes équivalents dans les langues additionnelles. Egalement appelé Vocabulaire Electrotechnique International (VEI) en ligne.

Service Clients - webstore.iec.ch/csc

Si vous désirez nous donner des commentaires sur cette publication ou si vous avez des questions contactez-nous: csc@iec.ch.

Documents
Document Sharing Hub

Full document details: IEC 61338-1 2004

IEC 61338-1

Edition 1.0 2004-11

INTERNATIONAL STANDARD

NORME INTERNATIONALE

Waveguide type dielectric resonators – Part 1: Generic specification

Résonateurs diélectriques à modes guidés – Partie 1: Spécification générique

INTERNATIONAL
ELECTROTECHNICAL
COMMISSION

COMMISSION
ELECTROTECHNIQUE
INTERNATIONALE

PRICE CODE
CODE PRIX

V

ICS 31.140

ISBN 978-2-8322-1000-0

Warning! Make sure that you obtained this publication from an authorized distributor.
Attention! Veuillez vous assurer que vous avez obtenu cette publication via un distributeur agréé.

AVA Documents
Document Sharing Hub

® Registered trademark of the International Electrotechnical Commission
Marque déposée de la Commission Electrotechnique Internationale

Full document details: IEC 61338-1 2004

CONTENTS

FOREWORD 4

1 General 6
1.1 Scope 6
1.2 Normative references 6
1.3 Order of precedence 7
2 Terminology and general requirements 7
2.1 General 7
2.2 Definitions 8
2.3 Preferred values for ratings and characteristics 18
2.4 Marking 19
3 Quality assessment procedures 19
3.1 General 19
3.2 Primary stage of manufacture 19
3.3 Structurally similar components 19
3.4 Sub-contracting 19
3.5 Manufacturer's approval 20
3.6 Approval procedures 20
3.7 Procedures for capability approval 21
3.8 Procedures for qualification approval 21
3.9 Test procedures 22
3.10 Screening requirements 22
3.11 Rework and repair work 22
3.12 Certified records of released lots 22
3.13 Validity of release 22
3.14 Release for delivery 22
3.15 Unchecked parameters 22
4 Test and measurement procedures 23
4.1 General 23
4.2 Test and measurement conditions 23
4.3 Visual inspection 23
4.4 Dimension and gauging procedure 23
4.5 Electrical test procedures 24
4.6 Mechanical and environmental test procedures 30

Figure 1 – $TE_{01\delta}$ mode dielectric resonator 10
Figure 2 – TM mode dielectric resonator 11
Figure 3 – $TM_{01\delta}$ mode dielectric resonator 11
Figure 4 – Hybrid mode dielectric resonator 12
Figure 5 – Multimode dielectric resonators 13
Figure 6 – TEM mode coaxial dielectric resonator 14
Figure 7 – Half wavelength stripline resonator 15
Figure 8 – Half wavelength microstripline resonator 16
Figure 9 – Coplanar resonator 17

AVA Documents
Document Sharing Hub

Full document details: IEC 61338-1 2004

Figure 10 – Transmission measurement 25
Figure 11 – Resonator test fixture 27
Figure 12 – Frequency response for test fixture A, B and D..... 28
Figure 13 – Frequency response for test fixture C 28

Documents
Document Sharing Hub

Full document details: IEC 61338-1 2004

INTERNATIONAL ELECTROTECHNICAL COMMISSION

WAVEGUIDE TYPE DIELECTRIC RESONATORS –

Part 1: Generic specification

FOREWORD

1) The International Electrotechnical Commission (IEC) is a worldwide organization for standardization comprising all national electrotechnical committees (IEC National Committees). The object of IEC is to promote international co-operation on all questions concerning standardization in the electrical and electronic fields. To this end and in addition to other activities, IEC publishes International Standards, Technical Specifications, Technical Reports, Publicly Available Specifications (PAS) and Guides (hereafter referred to as "IEC Publication(s)"). Their preparation is entrusted to technical committees; any IEC National Committee interested in the subject dealt with may participate in this preparatory work. International, governmental and non-governmental organizations liaising with the IEC also participate in this preparation. IEC collaborates closely with the International Organization for Standardization (ISO) in accordance with conditions determined by agreement between the two organizations.
2) The formal decisions or agreements of IEC on technical matters express, as nearly as possible, an international consensus of opinion on the relevant subjects since each technical committee has representation from all interested IEC National Committees.
3) IEC Publications have the form of recommendations for international use and are accepted by IEC National Committees in that sense. While all reasonable efforts are made to ensure that the technical content of IEC Publications is accurate, IEC cannot be held responsible for the way in which they are used or for any misinterpretation by any end user.
4) In order to promote international uniformity, IEC National Committees undertake to apply IEC Publications transparently to the maximum extent possible in their national and regional publications. Any divergence between any IEC Publication and the corresponding national or regional publication shall be clearly indicated in the latter.
5) IEC provides no marking procedure to indicate its approval and cannot be rendered responsible for any equipment declared to be in conformity with an IEC Publication.
6) All users should ensure that they have the latest edition of this publication.
7) No liability shall attach to IEC or its directors, employees, servants or agents including individual experts and members of its technical committees and IEC National Committees for any personal injury, property damage or other damage of any nature whatsoever, whether direct or indirect, or for costs (including legal fees) and expenses arising out of the publication, use of, or reliance upon, this IEC Publication or any other IEC Publications.
8) Attention is drawn to the Normative references cited in this publication. Use of the referenced publications is indispensable for the correct application of this publication.
9) Attention is drawn to the possibility that some of the elements of this IEC Publication may be the subject of patent rights. IEC shall not be held responsible for identifying any or all such patent rights.

This International Standard IEC 61338-1 has been prepared by IEC technical committee 49: Piezoelectric and dielectric devices for frequency control and selection.

IEC 61338-1 cancels and replaces the first edition of IEC 61338-1-1 published in 1996 and the first edition of IEC 61338-1-2 published in 1998.

This bilingual version (2013-08) corresponds to the monolingual English version, published in 2004-11.

The text of this standard is based on the following documents:

DIS	Report on Voting
49/690/FDIS	49/699/RVD

Full information on the voting for the approval of this standard can be found in the report on voting indicated in the above table.

Documents
Document Sharing Hub

Full document details: IEC 61338-1 2004

The French version of this standard has not been voted upon.

This publication has been drafted in accordance with the ISO/IEC Directives, Part 2.

IEC 61338 consists of the following parts, under the general title *Waveguide type dielectric resonators:*

Part 1: Generic specification

Part 1-3: General information and test conditions – Measurement method of complex relative permittivity for dielectric resonator materials at microwave frequency

Part 2: Guidelines for oscillator and filter applications

Part 4: Sectional specification

Part 4-1: Blank detail specification

The committee has decided that the contents of this publication will remain unchanged until the maintenance result date indicated on the IEC web site under "http://webstore.iec.ch" in the data related to the specific publication. At this date, the publication will be

- reconfirmed;
- withdrawn;
- replaced by a revised edition, or
- amended.

Documents
Document Sharing Hub

Full document details: IEC 61338-1 2004

WAVEGUIDE TYPE DIELECTRIC RESONATORS –

Part 1: Generic specification

1 General

1.1 Scope

This part of IEC 61338 applies to waveguide type dielectric resonators of assessed quality using either capability approval or qualification approval procedures. It also lists the test and measurement procedures which may be selected for use in detail specifications for such resonators.

1.2 Normative references

The following referenced documents are indispensable for the application of this document. For dated references, only the edition cited applies. For undated references, the latest edition of the referenced document (including any amendments) applies.

IEC 60027 (all parts), *Letter symbols to be used in electrical technology*

IEC 60050(561):1991, *International Electrotechnical Vocabulary (IEV) – Chapter 561: Piezo-electric devices for frequency control and selection*

IEC 60068-1:1988, *Environmental testing – Part 1: General and guidance*

IEC 60068-2-1:1990, *Environmental testing – Part 2: Tests – Tests A: Cold*

IEC 60068-2-2:1974, *Environmental testing – Part 2: Tests – Tests B: Dry Heat*

IEC 60068-2-6:1995, *Environmental testing – Part 2: Tests – Tests Fc: Vibration (sinusoidal)*

IEC 60068-2-7:1983, *Environmental testing – Part 2: Tests – Tests Ga and guidance: Acceleration, steady state*

IEC 60068-2-13:1983, *Environmental testing – Part 2: Tests – Tests M: Low air pressure*

IEC 60068-2-14:1984, *Environmental testing – Part 2: Tests – Tests N: Change of temperature*

IEC 60068-2-20:1979, *Environmental testing – Part 2: Tests – Tests T: Soldering*

IEC 60068-2-21:1999, *Environmental testing – Part 2: Tests – Tests U: Robustness of terminations and integral mounting devices*

IEC 60068-2-27:1987, *Environmental testing – Part 2: Tests – Tests Ea and guidance: Shock*

IEC 60068-2-29:1987, *Environmental testing – Part 2: Tests – Tests Eb and guidance: Bump*

Documents
Document Sharing Hub

Full document details: IEC 61338-1 2004

IEC 60068-2-30:1980, *Environmental testing – Part 2: Tests – Tests Db and guidance: Damp heat, cyclic (12 +12 hour cycle)*

IEC 60068-2-58:2004, *Environmental testing – Part 2-58: Tests – Test Td: Test methods for solderability, resistance to dissolution of metallization and to soldering heat of surface mounting devices (SMD)*

IEC 60068-2-78, *Environmental testing – Part 2: Tests – Test Cab: Damp heat, steady state*

IEC 60617, *Graphical symbols for diagrams*

IEC 61338-1-3:1999, *Waveguide type dielectric resonators – Part 1-3: General information and test conditions – Measurement method of complex relative permittivity for dielectric resonator materials at microwave frequency*

IEC 61338-4, *Waveguide type dielectric resonators of assessed quality – Part 4: Sectional specification* [1]

ISO 1000:1992, *SI units and recommendation for the use of their multiples and of certain other units*

QC 001001:2000, *IEC Quality Assessment System for Electronic Components (IECQ) – Basic Rules*

QC 001002-1:1998, *IEC Quality Assessment System for Electronic Components (IECQ) – Rules of Procedure – Part 1: Administration*

QC 001002-2:1998, *IEC Quality Assessment System for Electronic Components (IECQ) – Rules of Procedure – Part 2: Documentation*

QC 001002-3:1998, *IEC Quality Assessment System for Electronic Components (IECQ) – Rules of Procedure – Part 3: Approval Procedures*

QC 001005:2000, *Register of Firms, Products and Services approved under the IECQ System, including ISO 9000*

1.3 Order of precedence

Where any discrepancies occur for any reason, documents shall rank in the following order of priority:

– detail specification;
– sectional specification;
– generic specification;
– any other international documents (for example, of the IEC) to which reference is made.

The same order of preference shall apply to equivalent national documents.

2 Terminology and general requirements

2.1 General

Units, graphical symbols, letter symbols and terminology shall whenever possible, be taken from the following documents:

ISO 1000 SI units and recommendations for the use of their multiples and of certain other units

[1] To be published.

Documents
Document Sharing Hub

Full document details: IEC 61338-1 2004

IEC 60617 Graphical symbols for diagrams

IEC 60027 Letter symbols to be used in electrical technology

IEC 60050 International Electrotechnical Vocabulary

Any other units, symbols and terminology peculiar to one of the components covered by this generic specification, shall be taken from the relevant IEC or ISO documents listed under 1.2, Normative references.

The following paragraphs contain additional terminology applicable to waveguide type dielectric resonators.

2.2 Definitions

The following paragraphs contain additional terminology applicable to waveguide type dielectric resonators.

2.2.1 Dielectric material

Material which predominantly exhibits dielectric properties.

NOTE The dielectric material defined herein is intended to be used for resonator applications at high frequency. i.e. UHF or SHF range. Therefore, the dielectric material is required to have high dielectric constant, a low loss factor and a low temperature coefficient of permittivity.

2.2.2 Electric constant (ε_0)

Constant equal to $8{,}8542 \times 10^{-12}$ As V^{-1} m^{-1}, defined by the permittivity of vacuum.

2.2.3 Relative permittivity (ε_r)

Absolute permittivity of a material or medium divided by the electric constant ε_0.

NOTE The complex relative permittivity ε_r is defined as

$$\varepsilon_r = \varepsilon' - j\varepsilon'', \ \varepsilon' = \mathrm{Re}\,(\varepsilon), \ \varepsilon'' = -\,\mathrm{Im}\,(\varepsilon)$$

where

ε' is usually called dielectric constant;

ε'' corresponds to the dielectric loss of the material.

2.2.4 Absolute permittivity (ε)

Quantity which when multiplied by the electric field strength E is equal to the electric flux density D.

$$D = \varepsilon E, \ \varepsilon = \varepsilon_0\, \varepsilon_r$$

2.2.5 Loss angle (δ)

Phase displacement between the component of the electric flux density and the electric field strength.

2.2.6 Loss factor

Tangent of the loss angle δ.

$$\tan\,\delta = \varepsilon''/\varepsilon'$$

NOTE The loss factor can be determined by the ratio of the magnitude of the negative part to the real part of the complex relative permittivity.

AVA Documents Document Sharing Hub

Full document details: IEC 61338-1 2004

2.2.7 Quality factor of a material (Q_o)

Reciprocal of the tangent of the loss angle,

$$Q_o = \varepsilon'/\varepsilon'' = 1/\tan\delta$$

NOTE The quality factor of a material is also defined as 2π times the ratio of the stored electromagnetic energy to the energy dissipated in the material per cycle. It is frequency dependent.

2.2.8 Temperature coefficient of permittivity ($TC\varepsilon$)

Fractional change of permittivity due to a change in temperature divided by the change in temperature.

$$TC\varepsilon \quad \frac{\varepsilon_T - \varepsilon_{ref}}{\varepsilon_{ref}\ T - T_{ref}} \times 10^6 \qquad \left(1\times10^{-6}\ /\mathrm{K}\right)$$

where

ε_T is the permittivity at temperature T;

ε_{ref} is the permittivity at reference T_{ref}.

2.2.9 Coefficient of linear thermal expansion (α)

Fractional change of dimension due to a change in temperature divided by the change in temperature.

$$\alpha \quad \frac{\ell_T - \ell_{ref}}{\ell_{ref}\ T - T_{ref}} \times 10^6 \qquad 1\times10^{-6}\ /\mathrm{K}$$

where

ℓ_T is the dimension at temperature T;

ℓ_{ref} is the dimension at reference temperature T_{ref}.

2.2.10 Dielectric resonator

Resonator using dielectrics with a high dielectric constant and the structure of which is a dielectric waveguide of finite length.

NOTE The dielectric resonators in use are always shielded with conductors.

2.2.11 Dielectric support

Element supporting a dielectric resonator. The support is generally used for $TE_{01\delta}$ mode resonators and has a low dielectric constant (see Figure 1).

2.2.12 TE mode dielectric resonator

Dielectric resonator characterized by a transverse electric mode (TE mode) field distribution and usually having a high unloaded quality factor Q_u.

Documents
Document Sharing Hub

Full document details: IEC 61338-1 2004

2.2.13 $TE_{01\delta}$ mode dielectric resonator

Dielectric resonator characterized by a dominant TE mode field distribution, whose field leaks in the direction of wave propagation (see Figure 1).

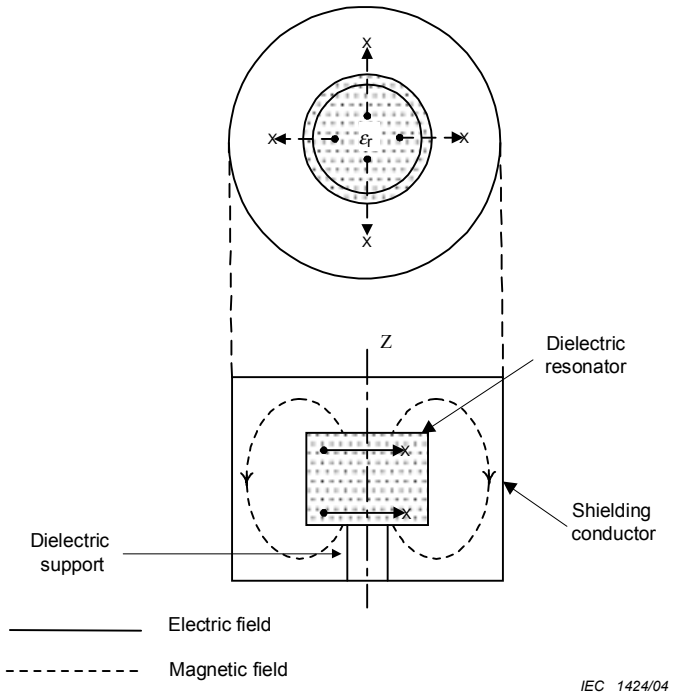

Figure 1 – $TE_{01\delta}$ mode dielectric resonator

2.2.14 TM mode dielectric resonator

Dielectric resonator characterized by a transverse magnetic mode (TM mode) field distribution (see Figure 2).

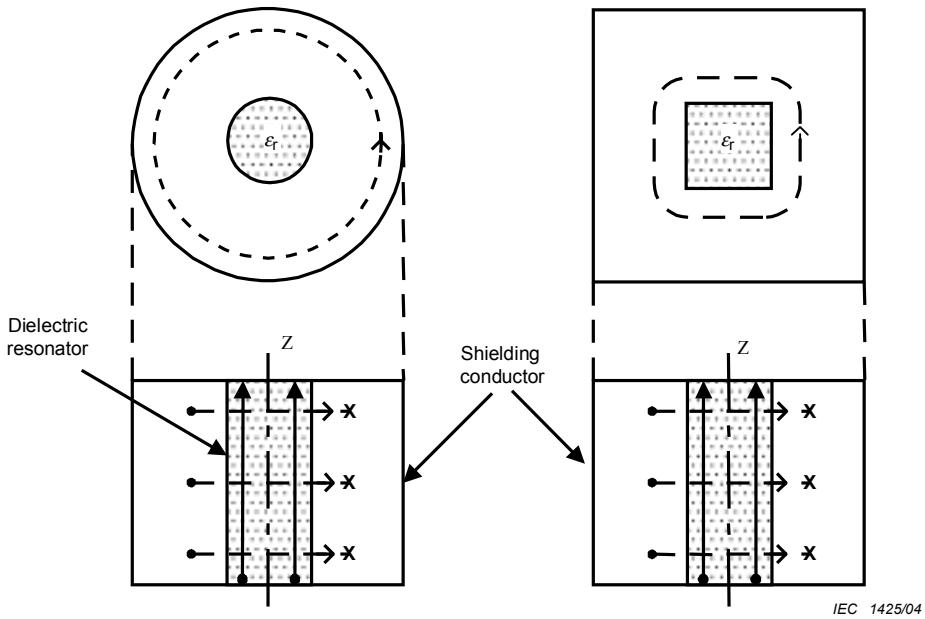

Documents
Document Sharing Hub
Full document details: IEC 61338-1 2004

Figure 2 – TM mode dielectric resonator

2.2.15 $TM_{01\delta}$ mode dielectric resonator

Dielectric resonator characterized by a dominant TM mode field distribution, whose field leaks in the direction of wave propagation (see Figure 3).

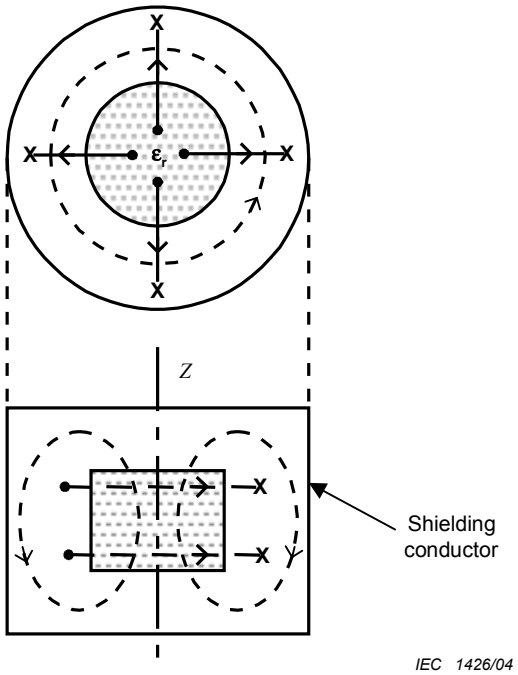

Figure 3 – $TM_{01\delta}$ mode dielectric resonator

2.2.16 Hybrid mode dielectric resonator

Dielectric resonator characterized by a hybrid mode field distribution. Hybrid mode is the mode which has axial components both of the electric and magnetic fields (see Figure 4).

Documents
Document Sharing Hub
Full document details: IEC 61338-1 2004

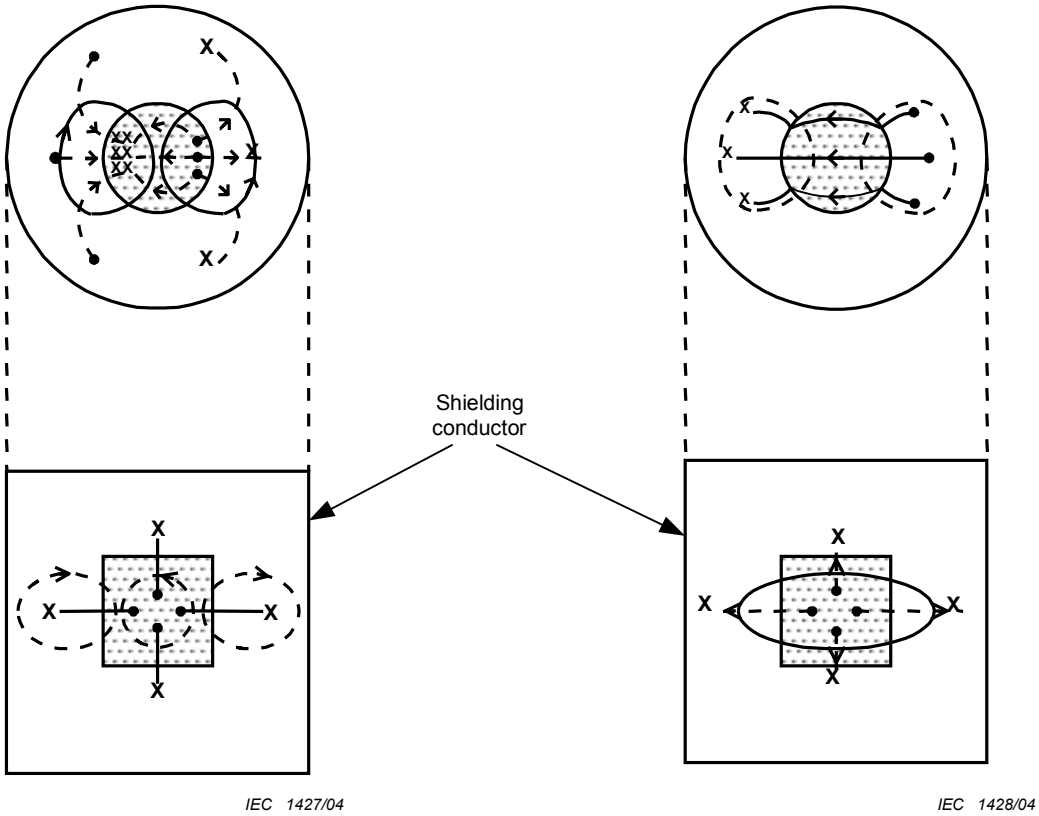

Figure 4a – $EH_{11\delta}$ mode

Figure 4b – $HE_{11\delta}$ mode

Figure 4 – Hybrid mode dielectric resonator

Documents
Document Sharing Hub
Full document details: IEC 61338-1 2004

2.2.17 Multimode dielectric resonator

Dielectric resonator characterized by the existence of several orthogonal resonance modes, the resonance frequencies of which coincide in such a way that any of which cannot be obtained by the superposition of others (see Figure 5). Any electromagnetic field perturbation affects independence of certain of these modes and causes energy coupling between them. This allows realization of reduced volume filters.

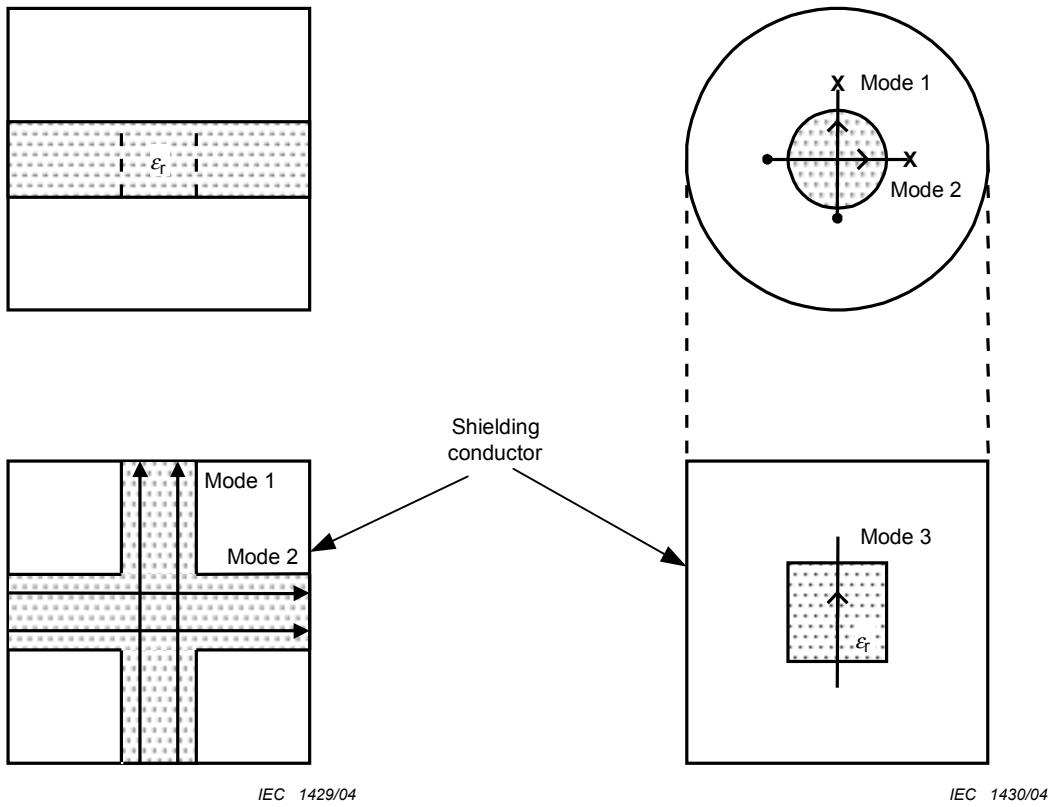

Figure 5a – $TM_{11\delta}$ dual mode

Figure 5b – Triple mode of $EH_{11\delta}$ dual mode and $TM_{11\delta}$ mode

Figure 5 – Multimode dielectric resonators

2.2.18 TEM mode dielectric resonator

Dielectric resonator characterized by a transverse electromagnetic mode (TEM mode) field distribution causing significant size reduction effect (see Figure 6).

2.2.19 Coaxial dielectric resonator

Dielectric resonator characterized by a TEM mode field distribution with a coaxial waveguide structure of finite length (see Figure 6).

2.2.20 Quarter wavelength resonator

Resonator characterized by any guided mode field distribution with standing wave of a quarter wavelength (see Figure 6a in the case of TEM mode).

Documents
Document Sharing Hub
Full document details: IEC 61338-1 2004

2.2.21 Half wavelength resonator

Resonator characterized by any guided mode field distribution with standing wave of a half wavelength (see Figure 6b in the case of TEM mode).

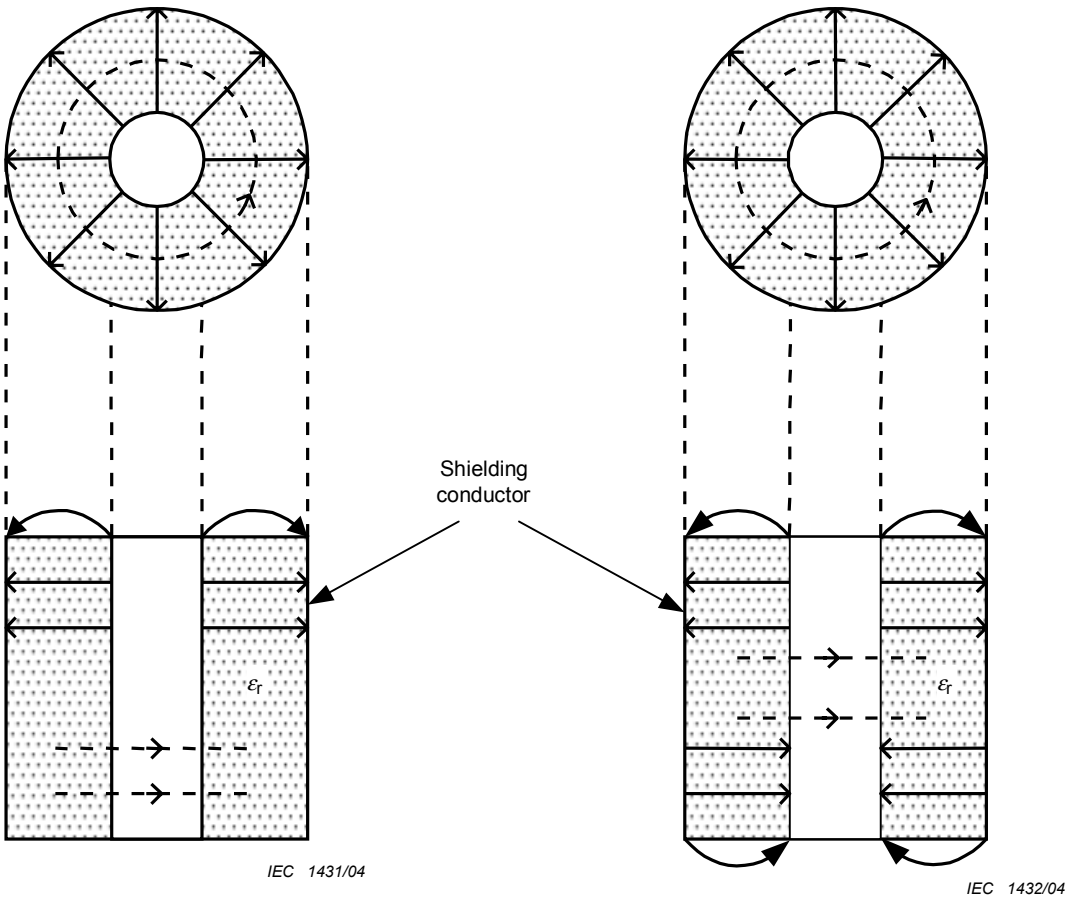

Figure 6a – Quarter wavelength TEM mode

Figure 6b – Half wavelength TEM mode

Figure 6 – TEM mode coaxial dielectric resonator

Documents
Document Sharing Hub
Full document details: IEC 61338-1 2004

2.2.22 Stripline resonator

Dielectric resonator characterized by a TEM mode field distribution. The structure is a stripline waveguide of finite length (see Figure 7).

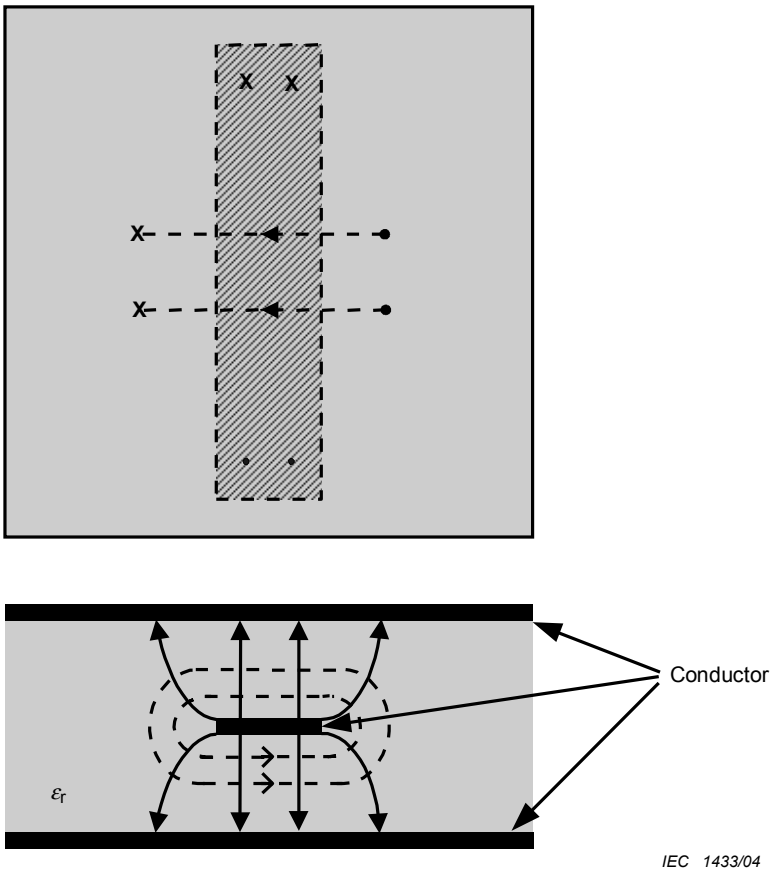

Figure 7 – Half wavelength stripline resonator

Documents
Document Sharing Hub
Full document details: IEC 61338-1 2004

2.2.23 Microstripline resonator

Dielectric resonator characterized by a TEM mode field distribution. The structure is a microstripline waveguide of finite length (see Figure 8).

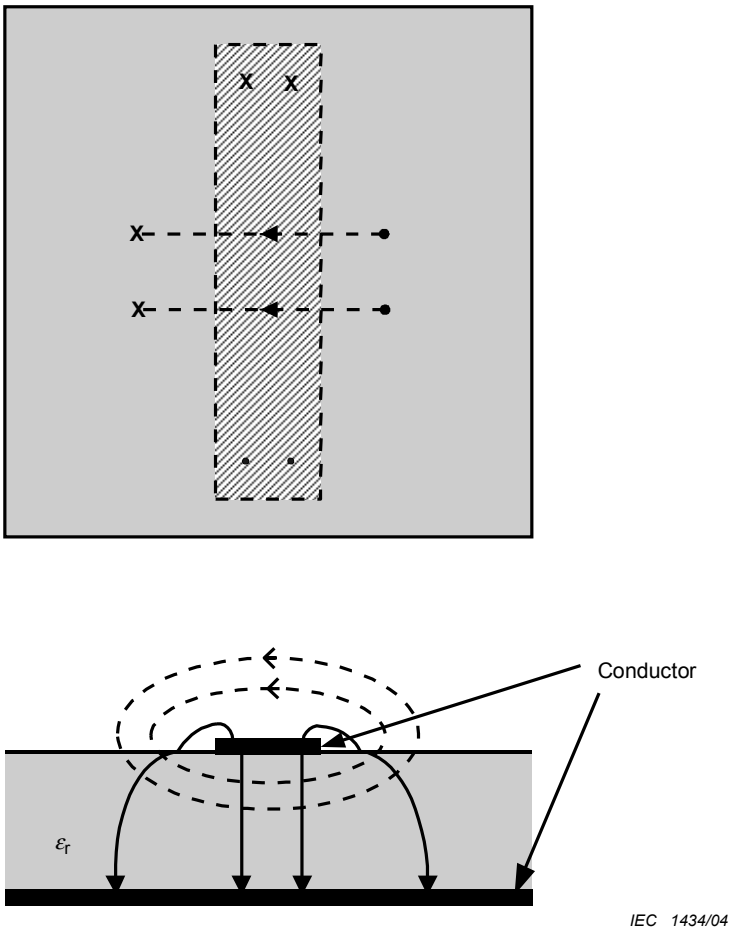

Figure 8 – Half wavelength microstripline resonator

Documents
Document Sharing Hub
Full document details: IEC 61338-1 2004

2.2.24 Coplanar resonator

Dielectric resonator characterized by a TEM mode field distribution. The structure is a coplanar-line waveguide of finite length (see Figure 9).

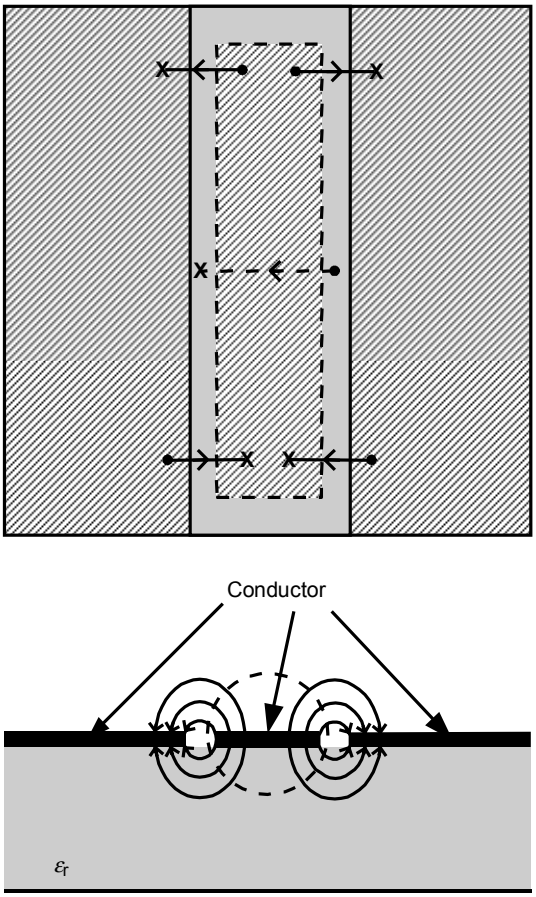

IEC 1435/04

Figure 9 – Coplanar resonator

2.2.25 Quality factor (Q)

The value defined as 2π times the ratio of the stored electromagnetic energy to the energy dissipated per cycle.

$$Q \quad 2\pi \frac{\textit{Electromagnetic energy stored in the resonator}}{\textit{Energy dissipated per cycle}}$$

2.2.26 Unloaded quality factor (Q_u)

Quality factor for the dielectric resonator with support and shielding conductors, excluding the energy dissipated in the external circuits.

$$\frac{1}{Q_u} \quad \frac{1}{Q_d} \quad \frac{1}{Q_s} \quad \frac{1}{Q_c} \quad \frac{1}{Q_r}$$

Documents
Document Sharing Hub
Full document details: IEC 61338-1 2004

where

Q_d is the quality factor due to the dielectric loss of the dielectric material;

Q_s is the quality factor due to the dielectric loss of the support;

Q_c is the quality factor due to the dielectric loss of the shielding conductors;

Q_r is the quality factor due to the radiation loss.

2.2.27 External quality factor (Q_e)

Quality factor due to the energy loss in the external circuit, excluding the energy dissipated in the resonator.

2.2.28 Loaded quality factor (Q_L)

Actual quality factor for the entire circuit, including all energy losses both in the resonator and in the external circuit.

$$\frac{1}{Q_L} \quad \frac{1}{Q_u} \quad \frac{1}{Q_e}$$

2.2.29 Resonance frequency

Frequency at which the average electric energy stored in the resonator is equal to the average magnetic energy stored in the resonator.

2.2.30 Temperature coefficient of resonance frequency (TCF)

The fractional change in frequency divided by the change in temperature.

$$TCF \quad \frac{f_T - f_{ref}}{f_{ref}\ T - T_{ref}}$$

where

f_T is the resonance frequency at temperature T;

f_{ref} is the frequency at reference temperature T_{ref}.

2.3 Preferred values for ratings and characteristics

Values should preferably to chosen from the following paragraphs.

2.3.1 Climatic category

40/085/56

For requirements where the operating temperature range of the resonator is greater than –40 °C to +85 °C a climatic category consistent with the operating temperature range shall be specified.

2.3.2 Bump severity

4000 10 bumps at 390 m/s^2 peak acceleration in each direction along three mutually-perpendicular axes. Pulse duration 6 ms.

Documents
Document Sharing Hub

Full document details: IEC 61338-1 2004

2.3.3 Vibration severity

10 Hz to 60 Hz 0,75 mm displacement amplitude (peak value 60 Hz to 2000 Hz 98,1 m/s^2 acceleration amplitude (peak value)	10 sweep cycles (10 Hz to 2000 Hz to 10 Hz) in each of three mutually-perpendicular axes at 1 octave/min

2.3.4 Shock severity

981 m/s^2 peak acceleration for 6 ms duration; three shocks in each direction along three mutually-perpendicular axes; half sine pulse.

2.4 Marking

Each resonator shall be indelibly and legibly marked with

– nominal frequency (which may be in code form);
– mark of origin (manufacturer's name, which may be in code form, or trade mark);
– date code;
– any other information necessary to provide a complete definition of the resonator.

NOTE For microminiature enclosures, the marking may be replaced by an alternative marking system, to avoid the deterioration of electrical performance. The marking should be made on the transport package.

3 Quality assessment procedures

3.1 General

Two methods are available for the approval of waveguide type dielectric resonators of assessed quality. They are qualification approval and capability approval.

3.2 Primary stage of manufacture

The primary stage of manufacture for a waveguide type dielectric resonator in accordance with Clause 4 of QC 001002-3 is the powder mix.

3.3 Structurally similar components

The grouping of structurally similar waveguide type dielectric resonators for the purpose of qualification approval, capability approval and quality conformance inspection shall be prescribed in the relevant sectional specification.

3.4 Sub-contracting

These procedures shall be in accordance with Clause 3 of QC 001002-3.

Documents
Document Sharing Hub
Full document details: IEC 61338-1 2004