IEC 61340-2-1

Edition 2.0 2015-08

INTERNATIONAL STANDARD

NORME INTERNATIONALE

HORIZONTAL STANDARD

NORME HORIZONTALE

Electrostatics –
Part 2-1: Measurement methods – Ability of materials and products to dissipate static electric charge

Électrostatique –
Partie 2-1: Méthodes de mesure – Capacité des matériaux et des produits à dissiper des charges électrostatiques

IEC 61340-2-1:2015-08(en-fr)

Documents
Document Sharing Hub
Full document details: IEC 61340-2-1 2015

THIS PUBLICATION IS COPYRIGHT PROTECTED

Copyright © 2015 IEC, Geneva, Switzerland

All rights reserved. Unless otherwise specified, no part of this publication may be reproduced or utilized in any form or by any means, electronic or mechanical, including photocopying and microfilm, without permission in writing from either IEC or IEC's member National Committee in the country of the requester. If you have any questions about IEC copyright or have an enquiry about obtaining additional rights to this publication, please contact the address below or your local IEC member National Committee for further information.

Droits de reproduction réservés. Sauf indication contraire, aucune partie de cette publication ne peut être reproduite ni utilisée sous quelque forme que ce soit et par aucun procédé, électronique ou mécanique, y compris la photocopie et les microfilms, sans l'accord écrit de l'IEC ou du Comité national de l'IEC du pays du demandeur. Si vous avez des questions sur le copyright de l'IEC ou si vous désirez obtenir des droits supplémentaires sur cette publication, utilisez les coordonnées ci-après ou contactez le Comité national de l'IEC de votre pays de résidence.

IEC Central Office
3, rue de Varembé
CH-1211 Geneva 20
Switzerland

Tel.: +41 22 919 02 11
Fax: +41 22 919 03 00
info@iec.ch
www.iec.ch

About the IEC
The International Electrotechnical Commission (IEC) is the leading global organization that prepares and publishes International Standards for all electrical, electronic and related technologies.

About IEC publications
The technical content of IEC publications is kept under constant review by the IEC. Please make sure that you have the latest edition, a corrigenda or an amendment might have been published.

IEC Catalogue - webstore.iec.ch/catalogue
The stand-alone application for consulting the entire bibliographical information on IEC International Standards, Technical Specifications, Technical Reports and other documents. Available for PC, Mac OS, Android Tablets and iPad.

IEC publications search - www.iec.ch/searchpub
The advanced search enables to find IEC publications by a variety of criteria (reference number, text, technical committee,…). It also gives information on projects, replaced and withdrawn publications.

IEC Just Published - webstore.iec.ch/justpublished
Stay up to date on all new IEC publications. Just Published details all new publications released. Available online and also once a month by email.

Electropedia - www.electropedia.org
The world's leading online dictionary of electronic and electrical terms containing more than 30 000 terms and definitions in English and French, with equivalent terms in 15 additional languages. Also known as the International Electrotechnical Vocabulary (IEV) online.

IEC Glossary - std.iec.ch/glossary
More than 60 000 electrotechnical terminology entries in English and French extracted from the Terms and Definitions clause of IEC publications issued since 2002. Some entries have been collected from earlier publications of IEC TC 37, 77, 86 and CISPR.

IEC Customer Service Centre - webstore.iec.ch/csc
If you wish to give us your feedback on this publication or need further assistance, please contact the Customer Service Centre: csc@iec.ch.

A propos de l'IEC
La Commission Electrotechnique Internationale (IEC) est la première organisation mondiale qui élabore et publie des Normes internationales pour tout ce qui a trait à l'électricité, à l'électronique et aux technologies apparentées.

A propos des publications IEC
Le contenu technique des publications IEC est constamment revu. Veuillez vous assurer que vous possédez l'édition la plus récente, un corrigendum ou amendement peut avoir été publié.

Catalogue IEC - webstore.iec.ch/catalogue
Application autonome pour consulter tous les renseignements bibliographiques sur les Normes internationales, Spécifications techniques, Rapports techniques et autres documents de l'IEC. Disponible pour PC, Mac OS, tablettes Android et iPad.

Recherche de publications IEC - www.iec.ch/searchpub

La recherche avancée permet de trouver des publications IEC en utilisant différents critères (numéro de référence, texte, comité d'études,…). Elle donne aussi des informations sur les projets et les publications remplacées ou retirées.

IEC Just Published - webstore.iec.ch/justpublished

Restez informé sur les nouvelles publications IEC. Just Published détaille les nouvelles publications parues. Disponible en ligne et aussi une fois par mois par email.

Electropedia - www.electropedia.org

Le premier dictionnaire en ligne de termes électroniques et électriques. Il contient plus de 30 000 termes et définitions en anglais et en français, ainsi que les termes équivalents dans 15 langues additionnelles. Egalement appelé Vocabulaire Electrotechnique International (IEV) en ligne.

Glossaire IEC - std.iec.ch/glossary
Plus de 60 000 entrées terminologiques électrotechniques, en anglais et en français, extraites des articles Termes et Définitions des publications IEC parues depuis 2002. Plus certaines entrées antérieures extraites des publications des CE 37, 77, 86 et CISPR de l'IEC.

Service Clients - webstore.iec.ch/csc

Si vous désirez nous donner des commentaires sur cette publication ou si vous avez des questions contactez-nous: csc@iec.ch.

Documents
Document Sharing Hub

Full document details: IEC 61340-2-1 2015

IEC 61340-2-1

Edition 2.0 2015-08

INTERNATIONAL STANDARD

NORME INTERNATIONALE

HORIZONTAL STANDARD
NORME HORIZONTALE

Electrostatics –
Part 2-1: Measurement methods – Ability of materials and products to dissipate static electric charge

Électrostatique –
Partie 2-1: Méthodes de mesure – Capacité des matériaux et des produits à dissiper des charges électrostatiques

INTERNATIONAL
ELECTROTECHNICAL
COMMISSION

COMMISSION
ELECTROTECHNIQUE
INTERNATIONALE

ICS 17.220.99; 29.020

ISBN 978-2-8322-2877-7

Warning! Make sure that you obtained this publication from an authorized distributor.
Attention! Veuillez vous assurer que vous avez obtenu cette publication via un distributeur agréé.

AVA Documents
Document Sharing Hub

® Registered trademark of the International Electrotechnical Commission
Marque déposée de la Commission Electrotechnique Internationale

Full document details: IEC 61340-2-1 2015

CONTENTS

FOREWORD 4
INTRODUCTION 6
1 Scope 7
2 Normative references 7
3 Terms and definitions 7
4 Method of measurement of charge decay 8
4.1 Principles 8
4.2 Environmental conditions 9
4.3 Apparatus for measurement of corona charge decay 10
4.3.1 Physical design features 10
4.3.2 Containment of test material 11
4.3.3 Corona charge deposition 11
4.3.4 Fieldmeter 11
4.4 Apparatus for measurement of contact charge decay 12
4.4.1 Physical design features 12
4.4.2 Charge decay time (t_{sd}) 13
5 Practical application of test methods and procedures 14
5.1 General 14
5.2 Charge decay test for textile materials 14
5.2.1 Selection of test method 14
5.2.2 Test surface preparation 14
5.2.3 Testing 14
5.2.4 Results 15
5.2.5 Test report 15
5.3 Charge decay test via gloves, finger cots or tools 15
5.3.1 Selection of test method 15
5.3.2 Common steps in testing 15
5.3.3 Test procedure for charge decay properties of finger cots as worn 16
5.3.4 Test procedure for the charge decay properties of gloves as worn 16
5.3.5 Test report for finger cots or gloves 16
5.3.6 Test procedure for the charge decay properties of tools 17
5.3.7 Test report for tools 17
5.4 Null test for CPM 17
Annex A (normative) Performance verification of measuring instrumentation 19
A.1 Verification of corona charge decay measuring instrumentation 19
A.1.1 Aspects to be verified 19
A.1.2 Surface potential sensitivity verification 19
A.1.3 Decay time verification 19
A.1.4 Verification procedure 19
A.2 Methods for verification of the capacitance of an isolated conductive plate 20
A.2.1 General 20
A.2.2 Capacitance meter method 20
A.2.3 Charge measuring method 20
A.2.4 Charge-sharing method 21
Bibliography 22

AVA Documents
Document Sharing Hub
Full document details: IEC 61340-2-1 2015

Figure 1 – Example of an arrangement for measurement of dissipation of charge using corona charging 10
Figure 2 – Example of an arrangement for measurement of dissipation of charge using a charged plate 12
Figure 3 – Charged plate detail 13
Figure 4 – Charge decay time (tsd) and offset voltage (U0) 13
Figure A.1 – Equivalent circuit for CPM and reference capacitor 21

Documents
Document Sharing Hub
Full document details: IEC 61340-2-1 2015

INTERNATIONAL ELECTROTECHNICAL COMMISSION

ELECTROSTATICS –

Part 2-1: Measurement methods – Ability of materials and products to dissipate static electric charge

FOREWORD

1) The International Electrotechnical Commission (IEC) is a worldwide organization for standardization comprising all national electrotechnical committees (IEC National Committees). The object of IEC is to promote international co-operation on all questions concerning standardization in the electrical and electronic fields. To this end and in addition to other activities, IEC publishes International Standards, Technical Specifications, Technical Reports, Publicly Available Specifications (PAS) and Guides (hereafter referred to as "IEC Publication(s)"). Their preparation is entrusted to technical committees; any IEC National Committee interested in the subject dealt with may participate in this preparatory work. International, governmental and non-governmental organizations liaising with the IEC also participate in this preparation. IEC collaborates closely with the International Organization for Standardization (ISO) in accordance with conditions determined by agreement between the two organizations.
2) The formal decisions or agreements of IEC on technical matters express, as nearly as possible, an international consensus of opinion on the relevant subjects since each technical committee has representation from all interested IEC National Committees.
3) IEC Publications have the form of recommendations for international use and are accepted by IEC National Committees in that sense. While all reasonable efforts are made to ensure that the technical content of IEC Publications is accurate, IEC cannot be held responsible for the way in which they are used or for any misinterpretation by any end user.
4) In order to promote international uniformity, IEC National Committees undertake to apply IEC Publications transparently to the maximum extent possible in their national and regional publications. Any divergence between any IEC Publication and the corresponding national or regional publication shall be clearly indicated in the latter.
5) IEC itself does not provide any attestation of conformity. Independent certification bodies provide conformity assessment services and, in some areas, access to IEC marks of conformity. IEC is not responsible for any services carried out by independent certification bodies.
6) All users should ensure that they have the latest edition of this publication.
7) No liability shall attach to IEC or its directors, employees, servants or agents including individual experts and members of its technical committees and IEC National Committees for any personal injury, property damage or other damage of any nature whatsoever, whether direct or indirect, or for costs (including legal fees) and expenses arising out of the publication, use of, or reliance upon, this IEC Publication or any other IEC Publications.
8) Attention is drawn to the Normative references cited in this publication. Use of the referenced publications is indispensable for the correct application of this publication.
9) Attention is drawn to the possibility that some of the elements of this IEC Publication may be the subject of patent rights. IEC shall not be held responsible for identifying any or all such patent rights.

International Standard IEC 61340-2-1 has been prepared by IEC technical committee 101: Electrostatics.

This second edition cancels and replaces the first edition published in 2002. This edition constitutes a technical revision.

This edition includes the following significant technical changes with respect to the previous edition:

Documents
Document Sharing Hub

Full document details: IEC 61340-2-1 2015

a) the first edition supported requirements in IEC TR 61340-5-1, but with the revision of IEC TR 61340-5-1 into an International Standard, this support is no longer required; references to IEC 61340-5-1[1][1] have been removed;

b) the introduction gives additional information on when charge decay time measurements are appropriate, and the applications for which each of the two test methods are best suited;

c) procedures for performance verification of measuring instruments for the corona charging method have been added.

The text of this standard is based on the following documents:

CDV	Report on voting
101/446/CDV	101/462/RVC

Full information on the voting for the approval of this standard can be found in the report on voting indicated in the above table.

This publication has been drafted in accordance with the ISO/IEC Directives, Part 2.

It has the status of a horizontal standard in accordance with IEC Guide 108[3].

A list of all the parts in the IEC 61340 series, published under the general title *Electrostatics*, can be found on the IEC website.

The committee has decided that the contents of this publication will remain unchanged until the stability date indicated on the IEC website under "http://webstore.iec.ch" in the data related to the specific publication. At this date, the publication will be

- reconfirmed,
- withdrawn,
- replaced by a revised edition, or
- amended.

[1] Numbers in square brackets refer to the Bibliography.

Documents
Document Sharing Hub

Full document details: IEC 61340-2-1 2015

INTRODUCTION

Measurements of the rate of dissipation of static charge belong to the essential measurement techniques in the field of electrostatics.

For homogeneous conductive materials, this property can be evaluated indirectly by measuring resistance or resistivity parameters. Care should be exercised when determining the homogeneity of materials, as some materials that appear homogenous do exhibit non-homogeneous electrical characteristics. If the homogeneity of materials is not known and cannot be otherwise verified, resistance measurements may not be reliable or may not give enough information. Resistance measurements may also not be reliable when evaluating materials in the dissipative or insulative range and especially for high ohmic materials including conductive fibres (e.g. textiles with a metallic grid). In such cases, the rate of dissipation of static charge should be measured directly.

Documents
Document Sharing Hub

Full document details: IEC 61340-2-1 2015

ELECTROSTATICS –

Part 2-1: Measurement methods – Ability of materials and products to dissipate static electric charge

1 Scope

This part of IEC 61340 describes test methods for measuring the rate of dissipation of static charge of insulating and static dissipative materials and products.

It includes a generic description of test methods and detailed test procedures for specific applications.

The two test methods for measuring charge decay time, one using corona charging and one using a charged metal plate are different and may not give equivalent results. Nevertheless, each method has a range of applications for which it is best suited. The corona charging method is suitable for evaluating the ability of materials, e.g. textiles, packaging, etc., to dissipate charge from their own surfaces. The charged metal plate method is suitable for evaluating the ability of materials and objects such as gloves, finger cots, hand tools, etc. to dissipate charge from conductive objects placed on or in contact with them. The charged plate method may not be suitable for evaluating the ability of materials to dissipate charge from their own surfaces.

In addition to its general application, this horizontal standard is also intended for use by technical committees in the preparation of standards in accordance with the principles laid down in IEC Guide 108.

One of the responsibilities of a technical committee is, wherever applicable, to make use of horizontal standards in the preparation of its publications. The contents of this horizontal standard shall not apply unless specifically referred to or included in the relevant publications.

2 Normative references

The following documents, in whole or in part, are normatively referenced in this document and are indispensable for its application. For dated references, only the edition cited applies. For undated references, the latest edition of the referenced document (including any amendments) applies.

IEC 61340-4-6, *Electrostatics – Part 4-6: Standard test methods for specific applications – Wrist straps*

IEC 61340-4-7, *Electrostatics – Part 4-7: Standard test methods for specific applications – Ionization*

3 Terms and definitions

For the purposes of this document, the following terms and definitions apply.

Documents
Document Sharing Hub

Full document details: IEC 61340-2-1 2015

3.1
charge decay
migration of charge across or through a material leading to a reduction of charge density or surface potential at the area where the charge was deposited

3.2
charge decay time
time from an initial voltage to a set fraction of the initial voltage

Note 1 to entry: 1/e and 10 % are appropriate fractions (e is the base of natural logarithms, equal to 2,718). If the initial voltage is low, the accuracy of decay time measurements to a small fraction of the initial voltage may be susceptible to the noise level of the fieldmeter.

3.3
charged plate monitor
CPM
instrument using a charged metal plate of a defined capacitance and geometry which is discharged in order to measure charge dissipation/neutralization properties of products or materials

Note 1 to entry: This note only applies to the French language.

3.4
corona
corona discharge
generation of ions of either polarities by a high electric field

3.5
static dissipative material
material which allows charge to migrate over its surface and/or through its volume in a time which is short compared to the time scale of the actions creating the charge, or short compared to the time within which this charge will cause an electrostatic problem

Note 1 to entry: Materials that may be considered conductive in other contexts are included within this definition for the purposes of this part of IEC 61340.

3.6
initial voltage
< corona charge decay> surface potential at a time after the end of charge deposition that is a sensible match to the time it takes material surfaces to separate in practical situations

Note 1 to entry: A time of 100 ms is appropriate for manual tribocharging actions.

3.7
initial voltage
<contact charge decay> voltage applied to the conductive plate of a charged plate monitor

3.8
insulator
material with very low mobility of charge so that any charge on the surface will remain there for a time which is long compared to the time scale of the actions creating the charge

4 Method of measurement of charge decay

4.1 Principles

Two methods are described.

The first method determines the dissipation of charge deposited on the surface of the material by a corona discharge. The resulting decrease in surface potential is observed using a

Documents
Document Sharing Hub
Full document details: IEC 61340-2-1 2015

fieldmeter or other equivalent equipment. This method is applicable to measurement of charge dissipation from surfaces and materials.

The second method determines the dissipation of charge from a charged plate through an object under test by applying a potential to the metallic plate, disconnecting the voltage source and observing the decrease in potential of the plate by means of a fieldmeter or other equivalent equipment. This method is applicable to measurement of charge dissipation via products such as finger cots, gloves and hand tools.

NOTE There are more methods to charge materials other than the charging methods described here (for example tribocharging or inductive charging) but they are not relevant for this standard.

CAUTION The test methods specified in this International Standard involve the use of high-voltage power supplies that may present hazards if handled incorrectly, particularly by unqualified or inexperienced personnel. Users of this International Standard are encouraged to carry out proper risk assessments and pay due regard to local regulations before undertaking any of the test procedures.

4.2 Environmental conditions

The electrical properties of materials vary with temperature and the absorption of moisture.

Unless otherwise agreed, the atmosphere for conditioning and testing shall be (23 ± 2) °C and (12 ± 3) % relative humidity, and the conditioning time prior to testing shall be at least 48 h.

For measurements in practical situations the ambient temperature and relative humidity shall be recorded.

Documents
Document Sharing Hub

Full document details: IEC 61340-2-1 2015

4.3 Apparatus for measurement of corona charge decay

4.3.1 Physical design features

Dimensions in millimetres with a tolerance of ± 1 mm.

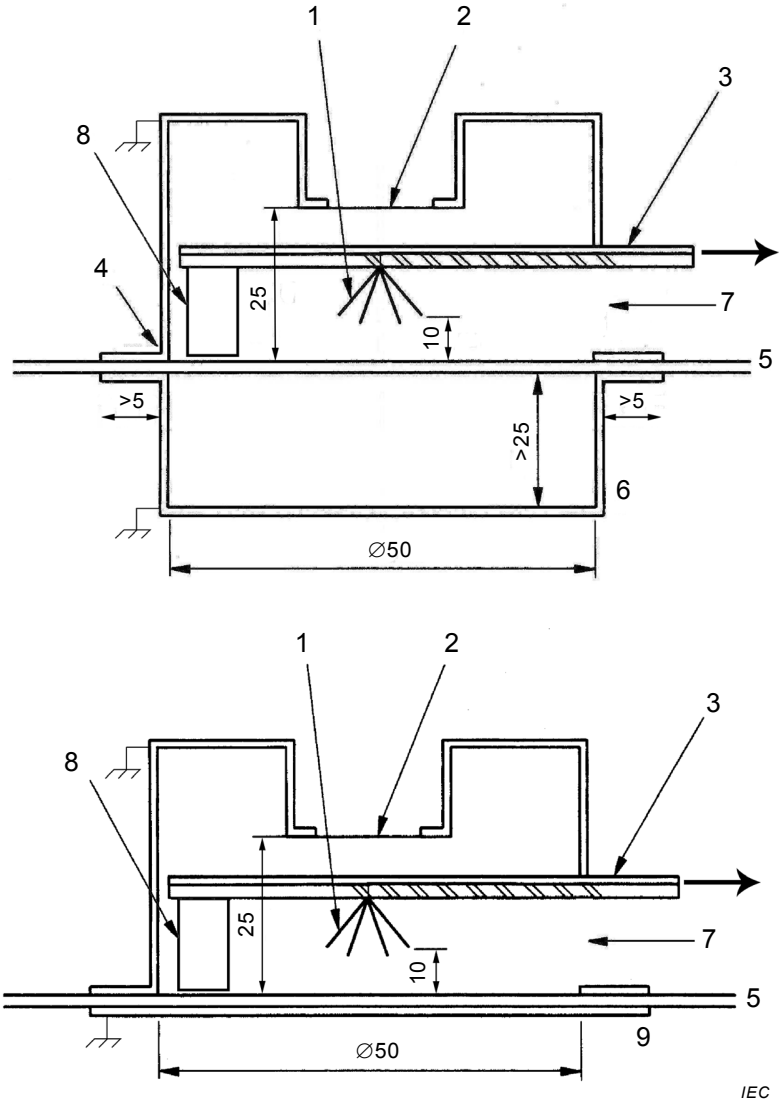

Key

1 Array of corona points, the tips of which form a circle (10 ± 1) mm in diameter
2 Fieldmeter sensing aperture
3 Movable plate:
– insulating plate to mount corona points (resistance to ground > 10^{14} Ω)
– earthed top surface to shield fieldmeter
4 Earthed casing
5 Sample
6 Metal plate (open backing)
7 Aperture through which the movable plate is withdrawn
8 Air dam
9 Metal plate (earthed backing)

Figure 1 – Example of an arrangement for measurement of dissipation of charge using corona charging

A typical arrangement and relevant dimensions of the test apparatus are shown in Figure 1. Other equipment giving similar results may be used.

Documents
Document Sharing Hub
Full document details: IEC 61340-2-1 2015

The test aperture for deposition and measurement of deposited charge shall be (50 ± 1) mm diameter or an equivalent area quasi-square aperture. An array of corona points is mounted on a movable plate above the centre of the test aperture. The fieldmeter sensing aperture shall be (25 ± 1) mm above the centre of the test area. When the plate with the corona points is moved fully away, the test area shall be clear up to the plane of the fieldmeter sensing aperture.

4.3.2 Containment of test material

With an installed material, the test aperture in the instrument base plate shall rest directly on its surface. Sheet or flexible materials shall be supported as follows:

a) for testing materials with open backing, the material shall be rested against an earthed metal plate with an aperture aligned with the instrument test aperture and with a width of at least 5 mm extending beyond the aperture. A shield over the reverse side of the test area shall be earthed and be at least 25 mm away over the whole test area;

b) for testing materials against an earthed backing, the material shall be mounted between the instrument base plate and a flat earthed metal plate.

NOTE If charge moves more readily through the bulk test material than across its surface, then placing an earthed metal plate immediately behind the test area can increase the rate of charge dissipation. On the other hand, if charge moves more readily across the surface of the test material, then the rate of charge dissipation can decrease if an earthed metal plate is used because its presence will increase the capacitive loading. To gain a full understanding of charge dissipation from the test material, it is desirable to make measurements both with and without an earthed metal plate backing the test area.

In practical terms, earthed backing represents a material in intimate contact with an earthed surface, for example, a garment fitted close to the body of the wearer, or a work surface on top of a metal bench. Open-backed measurements represent the other practical extreme where materials are separated from earthed surfaces, for example, the bottom edge of a coat or smock which hangs away from the body of the wearer.

4.3.3 Corona charge deposition

Corona charging is achieved with at least five corona points, the tips of which form a (10 ± 1) mm diameter circle, (10 ± 1) mm above the centre of the test area. The corona points shall be made from non-corrosive metal wire of a diameter in the range 0,1 mm to 0,5 mm. The exact size and distribution of charge on the material is not well defined, particularly with the more conductive surfaces, but the arrangement provides a consistent pattern of deposited charge and decay time measurements.

NOTE 1 Typical voltages for corona charging equipment are between 5 kV and 10 kV.

The corona duration shall be no more than 50 ms, and 10 ms or 20 ms is usually appropriate in order to achieve an adequate initial peak voltage for measurements. Excessively long deposition times (more than some seconds) may damage the material.

The materials shall be tested with positive and negative polarity.

The equipment for charge deposition shall move fully away from the region of fieldmeter observation in less than 20 ms.

NOTE 2 For corona voltages of 7 kV to 8 kV, the initial surface voltage with relatively high insulating materials will be up to about 3 kV. For materials with fast charge decay rates the initial voltage can be much lower – for example only 50 V to 100 V.

4.3.4 Fieldmeter

The fieldmeter shall be able to measure the surface voltage with an accuracy of ±5 V to below the lower limit of surface voltage that is required to be measured. The response time (10 % to 90 %) shall be at least one-tenth of the faster decay time required to be measured. The stability of the zero shall allow measurement of surface voltage with this accuracy over the longest decay times to be measured. Therefore, a rotating vane ‘field mill’ type of fieldmeter is preferred.

AVA Documents
Document Sharing Hub

Full document details: IEC 61340-2-1 2015

During corona charge deposition and decay time measurement, the fieldmeter sensing aperture shall be well shielded from any connections or surfaces associated with corona high-voltage supplies. There shall be no insulating materials around the region between the fieldmeter and the test aperture during the operation of the fieldmeter.

Any residual ionization shall contribute less than 20 V to the measurement of the surface voltage (excess ionization may be removed, for example, by using an air dam). This may be tested by measurements on a fully conducting test surface.

4.4 Apparatus for measurement of contact charge decay

4.4.1 Physical design features

The basic arrangement and relevant dimensions of the test apparatus are shown in Figure 2. Other equipment giving similar results may be used.

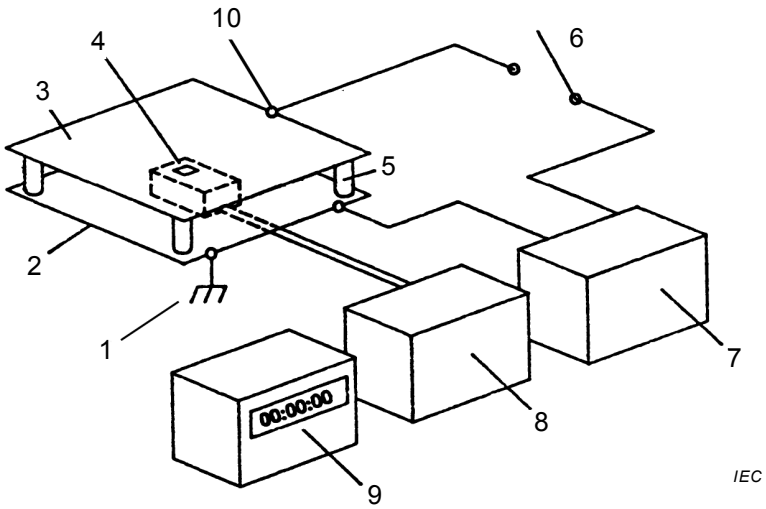

Key

1 Ground
2 Grounded surface, greater than 150 mm square
3 Conductive plate (150 ± 1) mm × (150 ± 1) mm
4 Probe
5 Supporting insulator (resistance to ground > 10^{14} Ω)
6 Switch
7 High-voltage power supply – current limited
8 Fieldmeter or equivalent
9 Discharge timer
10 High-voltage plate contact

Figure 2 – Example of an arrangement for measurement of dissipation of charge using a charged plate[2]

The instrument to measure the charge dissipation of objects under test is the charged plate monitor (see Figure 2). The conductive plate shall be (150 ± 1) mm × (150 ± 1) mm with a capacitance of 20 pF ± 2 pF when mounted in the test fixture. The wire between the switch and the plate shall be as short as possible.

There shall be no objects grounded or otherwise closer than dimension A of Figure 3 to the conductive plate, except the supporting insulators as shown in Figures 2 and 3, or the high-voltage plate contact as shown in Figure 2. The resistance to ground of the supporting insulators shall be >10^{14} Ω. Dimension A is selected to achieve the desired capacitance. The

[2] If the different components are integrated into one instrument, this is referred to as a charged plate monitor (CPM).

AVA Documents Document Sharing Hub

isolated conductive plate, when charged to the desired test voltage, shall not discharge more than 10 % of the test voltage within 5 min under the environmental conditions specified in 4.2. The response time of the monitoring device shall be sufficient to accurately measure charging plate voltages.

The capacitance of the plate and the wires shall be determined according to Clause A.2.

Further design requirements, including requirements for alternative charged plate monitor designs, are specified in IEC 61340-4-7.

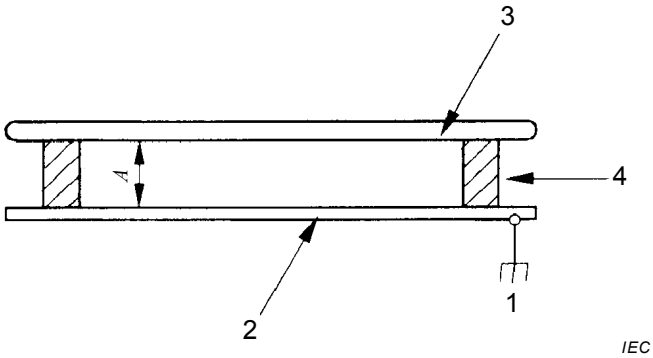

Key

1 Ground
2 Grounded surface, greater than 150 mm square
3 Conductive plate (150 ± 1) mm × (150 ± 1) mm
4 Supporting insulator

Figure 3 – Charged plate detail

4.4.2 Charge decay time (t_{sd})

The charge decay time is the period to reduce the initial voltage U_1 on the charged plate to a defined lower voltage level U_2, for example the time from 1 000 V to 100 V for positive or negative polarity (see Figure 4).

There may be occasions when the potential decay approaches a non-zero value. This final offset voltage is designated U_0.

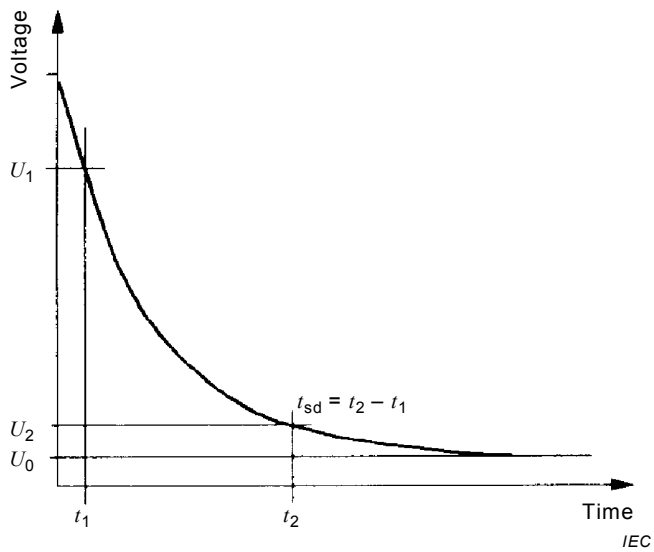

NOTE The decay curve may or may not go down to 0 V.

Figure 4 – Charge decay time (t_{sd}) and offset voltage (U_0)

Documents
Document Sharing Hub
Full document details: IEC 61340-2-1 2015