IEC 61340-2-3

Edition 2.0 2016-06

INTERNATIONAL STANDARD

NORME INTERNATIONALE

Electrostatics –
Part 2-3: Methods of test for determining the resistance and resistivity of solid materials used to avoid electrostatic charge accumulation

Électrostatique –
Partie 2-3: Méthodes d'essais pour la détermination de la résistance et de la résistivité des matériaux solides destinés à éviter les charges électrostatiques

IEC 61340-2-3:2016-06(en-fr)

Documents
Document Sharing Hub

Full document details: IEC 61340-2-3 2016

THIS PUBLICATION IS COPYRIGHT PROTECTED
Copyright © 2016 IEC, Geneva, Switzerland

All rights reserved. Unless otherwise specified, no part of this publication may be reproduced or utilized in any form or by any means, electronic or mechanical, including photocopying and microfilm, without permission in writing from either IEC or IEC's member National Committee in the country of the requester. If you have any questions about IEC copyright or have an enquiry about obtaining additional rights to this publication, please contact the address below or your local IEC member National Committee for further information.

Droits de reproduction réservés. Sauf indication contraire, aucune partie de cette publication ne peut être reproduite ni utilisée sous quelque forme que ce soit et par aucun procédé, électronique ou mécanique, y compris la photocopie et les microfilms, sans l'accord écrit de l'IEC ou du Comité national de l'IEC du pays du demandeur. Si vous avez des questions sur le copyright de l'IEC ou si vous désirez obtenir des droits supplémentaires sur cette publication, utilisez les coordonnées ci-après ou contactez le Comité national de l'IEC de votre pays de résidence.

IEC Central Office
3, rue de Varembé
CH-1211 Geneva 20
Switzerland

Tel.: +41 22 919 02 11
Fax: +41 22 919 03 00
info@iec.ch
www.iec.ch

About the IEC
The International Electrotechnical Commission (IEC) is the leading global organization that prepares and publishes International Standards for all electrical, electronic and related technologies.

About IEC publications
The technical content of IEC publications is kept under constant review by the IEC. Please make sure that you have the latest edition, a corrigenda or an amendment might have been published.

IEC Catalogue - webstore.iec.ch/catalogue
The stand-alone application for consulting the entire bibliographical information on IEC International Standards, Technical Specifications, Technical Reports and other documents. Available for PC, Mac OS, Android Tablets and iPad.

IEC publications search - www.iec.ch/searchpub
The advanced search enables to find IEC publications by a variety of criteria (reference number, text, technical committee,…). It also gives information on projects, replaced and withdrawn publications.

IEC Just Published - webstore.iec.ch/justpublished
Stay up to date on all new IEC publications. Just Published details all new publications released. Available online and also once a month by email.

Electropedia - www.electropedia.org
The world's leading online dictionary of electronic and electrical terms containing 20 000 terms and definitions in English and French, with equivalent terms in 15 additional languages. Also known as the International Electrotechnical Vocabulary (IEV) online.

IEC Glossary - std.iec.ch/glossary
65 000 electrotechnical terminology entries in English and French extracted from the Terms and Definitions clause of IEC publications issued since 2002. Some entries have been collected from earlier publications of IEC TC 37, 77, 86 and CISPR.

IEC Customer Service Centre - webstore.iec.ch/csc
If you wish to give us your feedback on this publication or need further assistance, please contact the Customer Service Centre: csc@iec.ch.

A propos de l'IEC
La Commission Electrotechnique Internationale (IEC) est la première organisation mondiale qui élabore et publie des Normes internationales pour tout ce qui a trait à l'électricité, à l'électronique et aux technologies apparentées.

A propos des publications IEC
Le contenu technique des publications IEC est constamment revu. Veuillez vous assurer que vous possédez l'édition la plus récente, un corrigendum ou amendement peut avoir été publié.

Catalogue IEC - webstore.iec.ch/catalogue
Application autonome pour consulter tous les renseignements bibliographiques sur les Normes internationales, Spécifications techniques, Rapports techniques et autres documents de l'IEC. Disponible pour PC, Mac OS, tablettes Android et iPad.

Recherche de publications IEC - www.iec.ch/searchpub
La recherche avancée permet de trouver des publications IEC en utilisant différents critères (numéro de référence, texte, comité d'études,…). Elle donne aussi des informations sur les projets et les publications remplacées ou retirées.

IEC Just Published - webstore.iec.ch/justpublished
Restez informé sur les nouvelles publications IEC. Just Published détaille les nouvelles publications parues. Disponible en ligne et aussi une fois par mois par email.

Electropedia - www.electropedia.org
Le premier dictionnaire en ligne de termes électroniques et électriques. Il contient 20 000 termes et définitions en anglais et en français, ainsi que les termes équivalents dans 15 langues additionnelles. Egalement appelé Vocabulaire Electrotechnique International (IEV) en ligne.

Glossaire IEC - std.iec.ch/glossary
65 000 entrées terminologiques électrotechniques, en anglais et en français, extraites des articles Termes et Définitions des publications IEC parues depuis 2002. Plus certaines entrées antérieures extraites des publications des CE 37, 77, 86 et CISPR de l'IEC.

Service Clients - webstore.iec.ch/csc
Si vous désirez nous donner des commentaires sur cette publication ou si vous avez des questions contactez-nous: csc@iec.ch.

Documents
Document Sharing Hub

Full document details: IEC 61340-2-3 2016

IEC 61340-2-3

Edition 2.0 2016-06

INTERNATIONAL STANDARD

NORME INTERNATIONALE

Electrostatics –
Part 2-3: Methods of test for determining the resistance and resistivity of solid materials used to avoid electrostatic charge accumulation

Électrostatique –
Partie 2-3: Méthodes d'essais pour la détermination de la résistance et de la résistivité des matériaux solides destinés à éviter les charges électrostatiques

INTERNATIONAL
ELECTROTECHNICAL
COMMISSION

COMMISSION
ELECTROTECHNIQUE
INTERNATIONALE

ICS 17.220.99; 29.020

ISBN 978-2-8322-3475-4

Warning! Make sure that you obtained this publication from an authorized distributor.
Attention! Veuillez vous assurer que vous avez obtenu cette publication via un distributeur agréé.

® Registered trademark of the International Electrotechnical Commission
Marque déposée de la Commission Electrotechnique Internationale

Documents
Document Sharing Hub

Full document details: IEC 61340-2-3 2016

CONTENTS

FOREWORD 4
INTRODUCTION 6
1 Scope 7
2 Normative references 7
3 Terms and definitions 7
4 Conditioning and test environment 9
5 Selection of test method 9
6 Resistance measurements for solid conductive materials 10
7 Resistance measurements for solid insulating materials 10
8 Resistance measurements for planar electrostatic dissipative materials (used to avoid electrostatic charge accumulation) 10
8.1 Instrumentation 10
8.1.1 General 10
8.1.2 Instrumentation for laboratory evaluation 10
8.1.3 Instrumentation for acceptance testing 10
8.1.4 Instrumentation for compliance verification (periodic testing) 11
8.2 Electrode assemblies 11
8.2.1 General 11
8.2.2 Assembly for the measurement of surface resistance 11
8.2.3 Assembly for the measurement of volume resistance 12
8.2.4 Assembly for the measurement of resistance to ground/groundable point and point-to-point resistance 12
8.2.5 Test support 13
8.3 Sample preparation and handling 13
8.4 Test procedures 14
8.4.1 Surface resistance measurements 14
8.4.2 Volume resistance measurements 14
8.4.3 Resistance to groundable point measurements 15
8.4.4 Point-to-point resistance measurements 16
9 Conversion to resistivity values 17
9.1 Surface resistivity ρ_S 17
9.2 Volume resistivity ρ_V 17
10 Resistance measurements for non-planar materials and products with small structures 18
10.1 General considerations 18
10.2 Equipment 18
10.2.1 Probe 18
10.2.2 Sample support surface 20
10.2.3 Resistance measurement apparatus 20
10.2.4 Test leads 21
10.3 Test procedure 22
11 Repeatability and reproducibility 22
12 Test report 23
Annex A (normative) System verification 25
A.1 System verification for surface resistance measurements 25

AVA Documents
Document Sharing Hub
Full document details: IEC 61340-2-3 2016

A.1.1 Fixture and procedure for lower resistance range 25
A.1.2 Fixture and procedure for upper resistance range and determination of electrification period.....26
A.2 System verification for volume resistance measurements 27
A.2.1 Fixture and procedure for lower resistance range 27
A.2.2 Fixture and procedure for upper resistance range and determination of electrification period.....27
A.3 System verification for resistance measurements for non-planar materials and products with small structures 27
A.3.1 Verification fixtures 27
A.3.2 Verification procedure 28

Figure 1 – Example of an assembly for the measurement of surface and volume resistance.....12
Figure 2 – Example of an assembly for the measurement of resistance to ground/groundable point and point-to-point resistance 13
Figure 3 – Basic connections of the electrodes for surface resistance measurements.....14
Figure 4 – Basic connections of the electrodes for volume resistance measurements 15
Figure 5 – Principle of resistance to groundable point measurements.....16
Figure 6 – Principle of point-to-point measurements.....17
Figure 7 – Configuration for the conversion to surface or volume resistivity 18
Figure 8 – Two-point probe configuration 20
Figure 9 – Probe to instrumentation connection.....21
Figure 10 – Spring compression for measurement.....22
Figure A.1 – Lower resistance range verification fixture for surface resistance measurements.....25
Figure A.2 – Upper resistance range verification fixture for surface resistance measurements.....26
Figure A.3 – Resistance verification fixture 28

Table 1 – Material for two-point probe.....19

Documents
Document Sharing Hub
Full document details: IEC 61340-2-3 2016

INTERNATIONAL ELECTROTECHNICAL COMMISSION

ELECTROSTATICS –

Part 2-3: Methods of test for determining the resistance and resistivity of solid materials used to avoid electrostatic charge accumulation

FOREWORD

1) The International Electrotechnical Commission (IEC) is a worldwide organization for standardization comprising all national electrotechnical committees (IEC National Committees). The object of IEC is to promote international co-operation on all questions concerning standardization in the electrical and electronic fields. To this end and in addition to other activities, IEC publishes International Standards, Technical Specifications, Technical Reports, Publicly Available Specifications (PAS) and Guides (hereafter referred to as "IEC Publication(s)"). Their preparation is entrusted to technical committees; any IEC National Committee interested in the subject dealt with may participate in this preparatory work. International, governmental and non-governmental organizations liaising with the IEC also participate in this preparation. IEC collaborates closely with the International Organization for Standardization (ISO) in accordance with conditions determined by agreement between the two organizations.
2) The formal decisions or agreements of IEC on technical matters express, as nearly as possible, an international consensus of opinion on the relevant subjects since each technical committee has representation from all interested IEC National Committees.
3) IEC Publications have the form of recommendations for international use and are accepted by IEC National Committees in that sense. While all reasonable efforts are made to ensure that the technical content of IEC Publications is accurate, IEC cannot be held responsible for the way in which they are used or for any misinterpretation by any end user.
4) In order to promote international uniformity, IEC National Committees undertake to apply IEC Publications transparently to the maximum extent possible in their national and regional publications. Any divergence between any IEC Publication and the corresponding national or regional publication shall be clearly indicated in the latter.
5) IEC itself does not provide any attestation of conformity. Independent certification bodies provide conformity assessment services and, in some areas, access to IEC marks of conformity. IEC is not responsible for any services carried out by independent certification bodies.
6) All users should ensure that they have the latest edition of this publication.
7) No liability shall attach to IEC or its directors, employees, servants or agents including individual experts and members of its technical committees and IEC National Committees for any personal injury, property damage or other damage of any nature whatsoever, whether direct or indirect, or for costs (including legal fees) and expenses arising out of the publication, use of, or reliance upon, this IEC Publication or any other IEC Publications.
8) Attention is drawn to the Normative references cited in this publication. Use of the referenced publications is indispensable for the correct application of this publication.
9) Attention is drawn to the possibility that some of the elements of this IEC Publication may be the subject of patent rights. IEC shall not be held responsible for identifying any or all such patent rights.

International Standard IEC 61340-2-3 has been prepared by IEC technical committee 101: Electrostatics.

This second edition cancels and replaces the first edition published in 2000. This edition constitutes a technical revision.

This edition includes the following significant technical changes with respect to the previous edition:

a) a distinction has been introduced between instrumentation used for laboratory evaluations, instrumentation used for acceptance testing and instrumentation used for compliance verification (periodic testing);

Documents
Document Sharing Hub

Full document details: IEC 61340-2-3 2016

b) an alternative electrode assembly is described, which can be used on non-planar products or when the dimensions of the product under test are too small to allow the larger electrode assembly to be used;

c) the formulae for calculating surface and volume resistivity have been modified to correspond with common industry practice in the main areas of application for the IEC 61340 series.

The text of this standard is based on the following documents:

CDV	Report on voting
101/470/CDV	101/494/RVC

Full information on the voting for the approval of this standard can be found in the report on voting indicated in the above table.

This publication has been drafted in accordance with the ISO/IEC Directives, Part 2.

A list of all the parts in the IEC 61340 series, published under the general title *Electrostatics*, can be found on the IEC website.

The committee has decided that the contents of this publication will remain unchanged until the stability date indicated on the IEC website under "http://webstore.iec.ch" in the data related to the specific publication. At this date, the publication will be

- reconfirmed,
- withdrawn,
- replaced by a revised edition, or
- amended.

Documents
Document Sharing Hub

Full document details: IEC 61340-2-3 2016

INTRODUCTION

Measurements of resistances and related calculations of resistivities belong to the fundamental objectives of electrical measuring techniques along with measurements of voltage and current.

Resistivity is the electrical characteristic having the widest range, extending over some thirty orders of magnitude from the most conductive metal to almost perfect insulators.

The basis is Ohm's law and is valid for DC current and instantaneous values of AC current in electron conductors (metals, carbon, etc.). Values of resistance measurements using AC current can be influenced by capacitive/inductive reactance, depending on the frequency. Thus, existing national and international standards dealing with resistance measurements of solid materials normally require the application of DC current.

Most non-metal materials such as plastics are classified as polymers and ion conductors. The transport of charges can be dependent upon the applied electrical field strength during the measurement. Beside the measuring current, there exists a charging current that polarizes and/or electrostatically charges the material, indicated by an asymptotic decay of the measuring current with time and causing an apparent change in resistance. If this effect is observed, it will be advisable to repeat the measurement immediately after a definite electrification time has elapsed using the reverse polarity for the measuring current and averaging both obtained values.

Documents
Document Sharing Hub

Full document details: IEC 61340-2-3 2016

ELECTROSTATICS –

Part 2-3: Methods of test for determining the resistance and resistivity of solid materials used to avoid electrostatic charge accumulation

1 Scope

This part of IEC 61340 describes test methods for the determination of the electrical resistance and resistivity of solid materials used to avoid electrostatic charge accumulation, in which the measured resistance is in the range 10^4 Ω to 10^{12} Ω.

It takes account of existing IEC/ISO standards and other published information, and gives recommendations and guidelines on the appropriate method.

2 Normative references

The following documents, in whole or in part, are normatively referenced in this document and are indispensable for its application. For dated references, only the edition cited applies. For undated references, the latest edition of the referenced document (including any amendments) applies.

IEC 62631-3-1, *Dielectric and resistive properties of solid insulating materials – Part 3-1: Determination of resistive properties (DC Methods) – Volume resistance and volume resistivity – General method*

IEC 62631-3-2, *Dielectric and resistive properties of solid insulating materials – Part 3-2: Determination of resistive properties (DC Methods) – Surface resistance and surface resistivity*

IEC 62631-3-3, *Dielectric and resistive properties of solid insulating materials – Part 3-3: Determination of resistive properties (DC Methods) – Insulation resistance*

ISO 1853, *Conducting and dissipative rubbers, vulcanized or thermoplastic – Measurement of resistivity*

ISO 2951, *Rubber, vulcanized or thermoplastic – Determination of insulation resistance*

ISO 3915, *Plastics – Measurement of resistivity of conductive plastics*

ISO 7619-1, *Rubber, vulcanized or thermoplastic – Determination of indentation hardness – Part 1: Durometer method (Shore hardness)*

3 Terms and definitions

For the purposes of this document, the following terms and definitions apply:

3.1
electrode
conductor of defined shape, size and configuration being in contact with the specimen to be measured

AVA Documents
Document Sharing Hub

Full document details: IEC 61340-2-3 2016

3.2
resistance
R
ratio of a DC voltage (V) applied between two points and the steady-state current (A) between the two points

Note 1 to entry: Resistance is expressed in ohms.

3.3
resistance to ground
R_g
resistance measured between an electrode placed on the surface of a test specimen and a local ground

Note 1 to entry: Resistance to ground is expressed in ohms.

3.4
resistance to groundable point
R_{gp}
resistance measured between an electrode placed on the surface of a test specimen and a groundable point fitted to the test specimen

Note 1 to entry: Resistance to groundable point is expressed in ohms.

3.5
point-to-point resistance
R_{pp}
resistance measured between two electrodes placed a specified distance apart on the same surface of a test specimen

Note 1 to entry: Point-to-point resistance is expressed in ohms.

3.6
surface resistance
R_s
resistance measured between a central disc electrode and a surrounding concentric ring electrode placed on the surface of a test specimen

Note 1 to entry: Surface resistance is expressed in ohms.

3.7
surface resistivity
ρ_s
resistivity equivalent to the surface resistance of a square area, having the electrodes at two opposite sides

Note 1 to entry: The SI unit of surface resistivity (Ω) is sometimes referred to as Ω/sq (ohms per square), to distinguish resistivity values from resistance values. However, the use of Ω/sq is deprecated because it may imply a resistance per unit area, which is not correct.

3.8
volume resistance
R_v
resistance measured between two electrodes placed on opposite surfaces of a test specimen

Note 1 to entry: Volume resistance is expressed in ohms.

Documents
Document Sharing Hub
Full document details: IEC 61340-2-3 2016

3.9
volume resistivity
ρ_v
ratio of a DC field strength (V/m) and the steady-state current density (A/m^2) within the material

Note 1 to entry: In practice, it is equivalent to the volume resistance of a cube with unit length, having the electrodes at two opposite surfaces.

Note 2 to entry: Volume resistivity is not an appropriate characteristic for materials that are electrically inhomogeneous.

Note 3 to entry: Volume resistivity is expressed in ohm meters.

4 Conditioning and test environment

The electrostatic behaviour of materials is influenced by environmental conditions, such as relative humidity and temperature.

For this reason, measurements shall be performed under controlled conditions. The selection of the appropriate conditions for testing shall be decided according to the type of material (product specification) and the intended application, based on the most severe conditions expected to occur during usage (e.g. lowest humidity and highest humidity).

Unless otherwise agreed, the atmosphere for conditioning and testing shall be (23 ± 2) °C and (12 ± 3) % relative humidity, and the conditioning time prior to testing shall be at least 24 h.

If it is required to test that the measured resistance is not below a minimum limit, additional testing at high humidity is required. Unless otherwise agreed, the atmosphere for conditioning and testing at high humidity shall be (23 ± 2) °C and (60 ± 10) % relative humidity, and the conditioning time prior to testing shall be at least 24 h.

Specimens shall normally be conditioned and measured in the same climate, if not specified differently. However, preconditioning may be necessary in order to eliminate the effects of stress appearing after the moulding process of some plastic materials or as a drying treatment before the test procedure starts. Preconditioning is normally done in a different environment.

Adequate devices are a desiccator in an oven or a climate chamber preferably equipped with forced circulation and interchange of air.

5 Selection of test method

For planar materials, the following procedure shall be used to select the test method:

a) if the range of electrical resistance of a material to be tested is known, then use the relevant clause (Clause 6, 7, 8 or 10) where appropriate standards are listed or methods described;

b) for a material of initially unknown resistivity, start the measurements by using methods for conductive materials according to Clause 6.

If the measurement is not possible or the obtained result exceeds the given range for the application of the test method, it shall be regarded as being inadequate and the result shall not be taken into account. The measurement shall be repeated according to Clause 8 or Clause 10 for electrostatic dissipative materials. If the situation described above occurs again, the measurement shall be repeated according to Clause 7 for insulating materials.

AVA Documents
Document Sharing Hub

Full document details: IEC 61340-2-3 2016

For non-planar materials and for products with structures that are too small to allow the use of the electrode assemblies specified in 8.2, the method described in Clause 10 shall be used.

If the measurement result using the method described in Clause 10 is less than 10^4 Ω or greater than 10^{12} Ω, and the shape or dimensions of the material under test do not allow measurements according to Clause 6 or Clause 7, the test result shall be reported as either "$<10^4$ Ω" or "$>10^{12}$ Ω".

6 Resistance measurements for solid conductive materials

The resistance of solid conductive materials (non-metals) shall be measured in accordance with ISO 3915 for plastics or ISO 1853 for rubbers. If the measured resistance is greater than or equal to 10^4 Ω, use the methods described in Clause 7, 8 or 10.

7 Resistance measurements for solid insulating materials

The resistance of solid insulating materials shall be measured in accordance with IEC 62631-3-1, IEC 62631-3-2 or IEC 62631-3-3 for plastics, or ISO 2951 for rubbers.

8 Resistance measurements for planar electrostatic dissipative materials (used to avoid electrostatic charge accumulation)

8.1 Instrumentation

8.1.1 General

The instrumentation may consist of either a DC power supply and an ammeter, or an integrated instrument (ohmmeter). National safety regulations shall be followed.

8.1.2 Instrumentation for laboratory evaluation

The output voltage under load shall be (100 ± 5) V for measurements of 1×10^6 Ω and higher, and (10,0 ± 0,5) V for less than 1×10^6 Ω.

If an ohmmeter is used, readings shall be possible at least from 1×10^3 Ω to 1×10^{13} Ω, with an accuracy of ±10 %.

If a DC power supply and ammeter are used, readings shall be possible at least from 10 pA to 10 mA. The combined accuracy of the DC power supply and ammeter shall be ±10 %.

8.1.3 Instrumentation for acceptance testing

Instrumentation for laboratory evaluation or instrumentation meeting the following requirements shall be used for acceptance testing.

The open circuit voltage shall be (100 ± 5) V for measurements of 1×10^6 Ω and higher, and (10,0 ± 0,5) V for less than 1×10^6 Ω.

If an ohmmeter is used, readings shall be possible at least from 1×10^3 Ω to 1×10^{13} Ω, with an accuracy of ±20 %.

If a DC power supply and ammeter are used, readings shall be possible at least from 10 pA to 10 mA with an accuracy of ±20 %.

AVA Documents
Document Sharing Hub

Full document details: IEC 61340-2-3 2016

In case of dispute, instrumentation for laboratory evaluations shall be used.

8.1.4 Instrumentation for compliance verification (periodic testing)

Instrumentation meeting the requirements for laboratory evaluations or acceptance testing, or instrumentation meeting the following requirements shall be used.

Compliance verification instrumentation shall be capable of making measurements one order of magnitude above and below the intended measurement range. The output voltage of compliance verification instrumentation may vary from laboratory evaluation or acceptance testing instrumentation, and may be rated under load or open circuit. Compliance verification instrumentation shall be checked against laboratory evaluation or acceptance testing instrumentation to ensure there is correlation between measurement results.

In case of dispute, instrumentation for acceptance testing or laboratory evaluation shall be used.

8.2 Electrode assemblies

8.2.1 General

The electrodes shall consist of a material that allows intimate contact with the specimen surface and introduces no appreciable error because of electrode resistance or contamination of the specimen. The electrode material shall be corrosion resistant under test conditions and shall not cause a chemical reaction with the material being tested.

The assemblies described in the subclauses below are recommended to be suitable, but other configurations complying with national or international standards may also be used, if appropriate. Especially for volume resistance measurements of electrostatic dissipative materials, it is important that applied probes of the guarded ring type have sufficient space between the centre (measuring) and ring (guard) contact electrode in order to minimize stray currents falsifying the readings. It is recommended, that the gap g shall be at least 10 mm. In cases of dispute, the assemblies described in this standard shall be applied.

8.2.2 Assembly for the measurement of surface resistance

The electrode assembly (probe 1) contains a central disc surrounded by a concentric ring made of conductive materials which make contact with the material under test (see Figure 1). The total mass of the electrode assembly shall be (2,5 ± 0,25) kg.

The contact surface material shall have a volume resistance of less than 10^3 Ω when tested on a stainless, non-corrosive metal plate (not aluminium) as the counter electrode by applying (10,0 ± 0,5) V, and shall have a Shore A hardness of 50 to 70 when tested according to ISO 7619-1.

Insulating materials used in the electrode assembly shall have volume and/or surface resistance greater than 10^{13} Ω when tested according to IEC 62631-3-1 and/or IEC 62631-3-2 respectively.

The material under test shall be placed on an insulating support as described in 8.2.5.

Documents
Document Sharing Hub

Full document details: IEC 61340-2-3 2016

Dimensions in millimetres

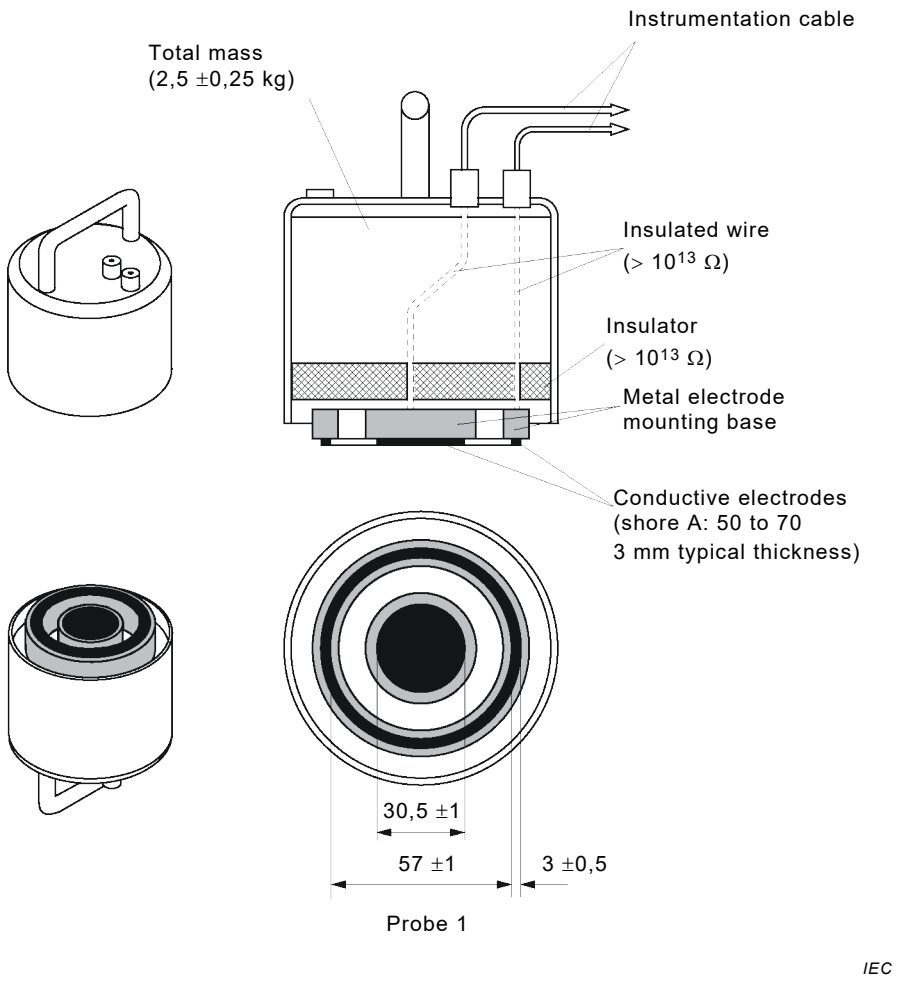

Figure 1 – Example of an assembly for the measurement of surface and volume resistance

8.2.3 Assembly for the measurement of volume resistance

The assembly consists of two electrodes placed on either side of the material under test (see Figure 4). The top electrode assembly (probe 1) shall be as described in 8.2.2 and shown in Figure 1.

The bottom electrode (probe 2) shall be a stainless, non-corrosive metal plate (not aluminium) sufficiently large to support the specimen under test. Probe 2 shall be equipped with a permanent connecting terminal (e.g. plug hole, riveted connector). Crocodile clips should not be used.

It should be placed either on an insulating support as described in 8.2.5 prior to test or be equipped with equivalent insulating feet.

8.2.4 Assembly for the measurement of resistance to ground/groundable point and point-to-point resistance

The assembly consists of one (resistance to ground/groundable point) or two (point-to-point resistance) electrodes (probe 3) containing a disk made of conductive material which makes contact with the material under test (see Figure 2). The total mass of the electrode assembly shall be (2,5 ± 0,25) kg.

Documents
Document Sharing Hub
Full document details: IEC 61340-2-3 2016

The contact surface material shall be conductive enough that two probes placed on a metal surface (e.g. probe 2) have a point-to-point resistance of less than 10^3 Ω when tested with (10,0 ± 0,5) V, and shall have a Shore A hardness of 50 to 70 when tested according to ISO 7619-1.

Insulating materials used in the electrode assembly shall have volume and/or surface resistance greater than 10^{13} Ω when tested according to IEC 62631-3-1 and/or IEC 62631-3-2 respectively.

The material under test shall be placed on an insulating support as described in 8.2.5.

Dimensions in millimetres

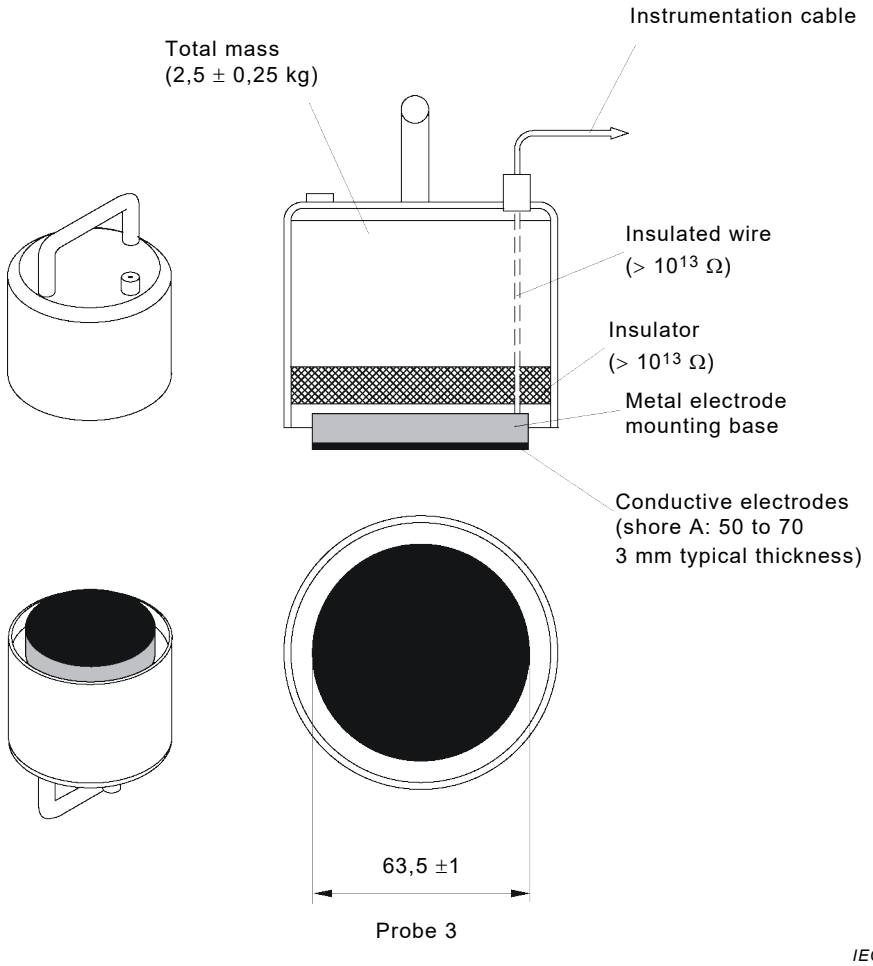

Figure 2 – Example of an assembly for the measurement of resistance to ground/groundable point and point-to-point resistance

8.2.5 Test support

The material shall be tested on a smooth flat support having a surface resistance greater than 1×10^{13} Ω, measured according to IEC 62631-3-2. The size shall be at least 10 mm more in length and width compared to the size of the specimen under test. The minimum thickness shall be 1 mm.

8.3 Sample preparation and handling

Refer to applicable material specifications for sampling instructions. The specimens shall not be handled or marked in areas where measurements will be performed. If the areas where

AVA Documents
Document Sharing Hub
Full document details: IEC 61340-2-3 2016

the electrodes make contact have been reworked, this shall be stated in the test report. When the surface resistance is to be measured, the surface shall not be cleaned unless agreed on or specified. Care shall be taken in applying the electrodes and also in handling and mounting the specimens for the measurements in order to minimize the possibility of creating electrical paths due to contamination that may adversely affect the test results.

Specimens shall preferably have a simple geometric shape in the form of sheets with a minimum size of at least 80 mm × 120 mm or 110 mm diameter.

If no other regulation is given, a minimum of three representative specimens of the sample material shall be prepared. The surface to be tested shall be clearly marked or otherwise identified.

8.4 Test procedures

8.4.1 Surface resistance measurements

The electrode assembly described in 8.2.2 is connected to the instrumentation (see Figure 3). The specimen shall be placed onto the test support with the surface to be tested facing up. The electrode assembly is then positioned onto the approximate centre of the specimen or at least 10 mm away from the edges.

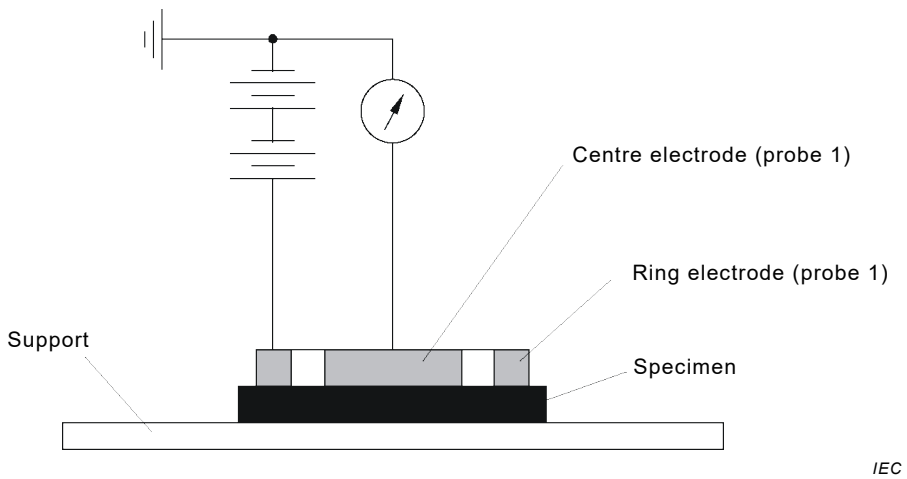

Figure 3 – Basic connections of the electrodes for surface resistance measurements

Energize the instrumentation at (10,0 ± 0,5) V and record the reading after (15 ± 1) s, unless otherwise specified. If the indicated resistance is less than 1,0 × 10^6 Ω, report the value and proceed to the next specimen. If the indicated resistance is equal to or higher than 1,0 × 10^6 Ω, de-energize the instrumentation and repeat the procedure using (100 ± 5) V. Record the indicated resistance after the electrification period determined in A.1.2.

8.4.2 Volume resistance measurements

The electrode assemblies described in 8.2.2 are connected to the instrumentation (see Figure 4). The bottom electrode (probe 2) is then placed onto the test support first and the specimen laid onto it. Afterwards, the top electrode (probe 1) is positioned onto the approximate centre of the specimen or at least 10 mm away from the edges.

Documents
Document Sharing Hub
Full document details: IEC 61340-2-3 2016

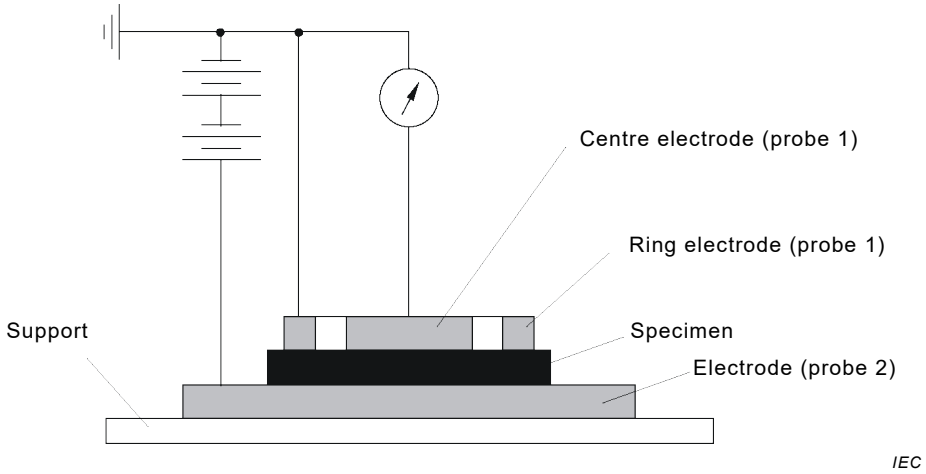

Figure 4 – Basic connections of the electrodes for volume resistance measurements

Energize the instrumentation at (10,0 ± 0,5) V and record the reading after (15 ± 1) s, unless otherwise specified. If the indicated resistance is less than 1,0 × 10^6 Ω, record the value and proceed to the next specimen. If the indicated resistance is equal to or higher than 1,0 × 10^6 Ω, de-energize the instrumentation and repeat the procedure using (100 ± 5) V. Record the indicated resistance after the electrification period determined in A.2.2.

If an evaluation of the volume resistivity is required, the average thickness h of each specimen shall be determined prior to any measurement following the instructions given in the relevant product specification.

8.4.3 Resistance to groundable point measurements

8.4.3.1 Measurements on laboratory specimens

The test specimens shall be fitted with a representative groundable point. Place the specimens onto the test support with the surface to be tested facing up. Put the electrode assembly (probe 3) onto the surface of the specimen in a position such that the centre of the electrode assembly is at least 50 mm away from the specimen edges or groundable point (see Figure 5). Connect the electrode assembly to one lead of the instrumentation and the groundable point to the other lead.

Energize the instrumentation at (10,0 ± 0,5) V and record the reading after (15 ± 1) s if the indicated resistance is less than 1,0 × 10^6 Ω. Then proceed to the next position or specimen. If the indicated resistance is equal or higher than 1,0 × 10^6 Ω, de-energize the instrumentation and repeat the procedure using (100 ± 5) V.

Documents
Document Sharing Hub
Full document details: IEC 61340-2-3 2016

Dimensions in millimetres

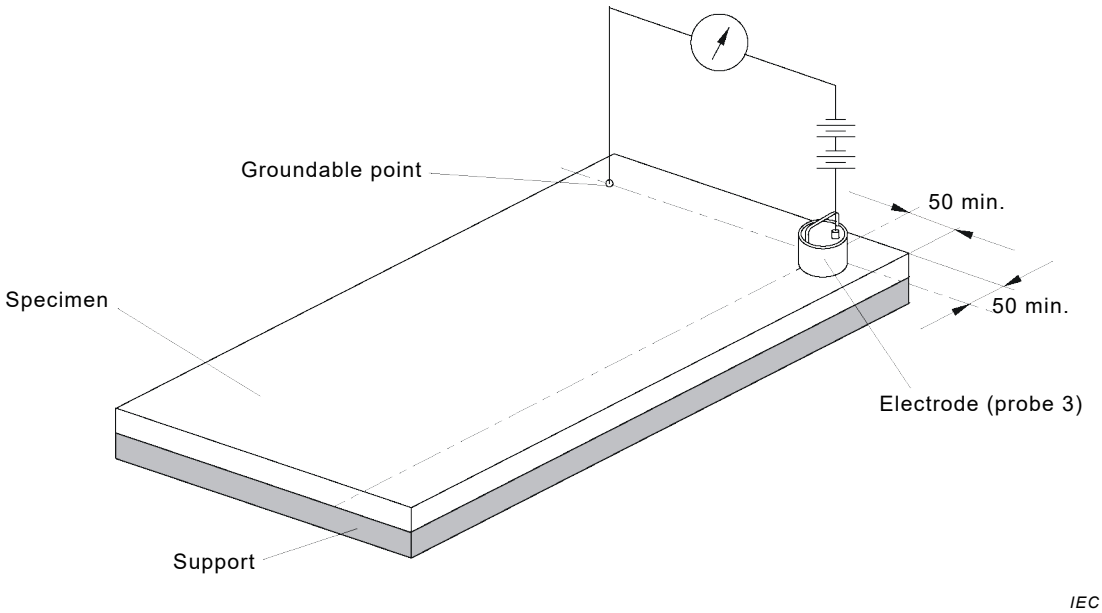

Figure 5 – Principle of resistance to groundable point measurements

8.4.3.2 Measurements on installed materials

Put the electrode assembly (probe 3) onto the surface of the specimen in a position at least 50 mm away from the specimen edges or groundable point (see Figure 5). Connect the electrode assembly to one lead of the instrumentation and the groundable point to the other lead.

Energize the instrumentation at (10,0 ± 0,5) V and record the reading after (15 ± 1) s if the indicated resistance is less than 1,0 × 10^6 Ω. Then proceed to the next position or specimen. If the indicated resistance is equal or higher than 1,0 × 10^6 Ω, de-energize the instrumentation and repeat the procedure using (100 ± 5) V.

Line-powered instruments can require an alternate test lead set up to properly measure grounded items. The equipment grounding conductor should be insulated from signal ground. Additionally, the high-potential test lead can require connection to the ground side of the item under test. Consult the instrument manufacturer's instructions for test lead arrangement.

8.4.4 Point-to-point resistance measurements

Connect two electrode assemblies (probes 3) described in 8.2.4 to the instrumentation. The specimen shall be placed onto the test support with the surface to be tested facing up. The probes shall be then placed onto the surface of the specimen in a specified or, if appropriate, otherwise chosen position at least 250 mm in distance from their longitudinal axes, and at least 50 mm away from the edges of the specimen (see Figure 6).

Energize the instrumentation at (10,0 ± 0,5) V and record the reading after (15 ± 1) s if the indicated resistance is less than 1,0 × 10^6 Ω. Then proceed to the next position or specimen. If the indicated resistance is equal or higher than 1,0 × 10^6 Ω, de-energize the instrumentation and repeat the procedure using (100 ± 5) V.

Documents
Document Sharing Hub
Full document details: IEC 61340-2-3 2016