# IEC 61340-4-6

Edition 2.0 2015-05

# INTERNATIONAL STANDARD

# NORME INTERNATIONALE

## Electrostatics –
## Part 4-6: Standard test methods for specific applications – Wrist straps

## Électrostatique –
## Partie 4-6: Méthodes d'essai normalisées pour des applications spécifiques – Bracelets de conduction dissipative

IEC 61340-4-6:2015-05(en-fr)

Documents
Document Sharing Hub

Full document details: IEC 61340-4-6 2015

**THIS PUBLICATION IS COPYRIGHT PROTECTED**

**Copyright © 2015 IEC, Geneva, Switzerland**

All rights reserved. Unless otherwise specified, no part of this publication may be reproduced or utilized in any form or by any means, electronic or mechanical, including photocopying and microfilm, without permission in writing from either IEC or IEC's member National Committee in the country of the requester. If you have any questions about IEC copyright or have an enquiry about obtaining additional rights to this publication, please contact the address below or your local IEC member National Committee for further information.

Droits de reproduction réservés. Sauf indication contraire, aucune partie de cette publication ne peut être reproduite ni utilisée sous quelque forme que ce soit et par aucun procédé, électronique ou mécanique, y compris la photocopie et les microfilms, sans l'accord écrit de l'IEC ou du Comité national de l'IEC du pays du demandeur. Si vous avez des questions sur le copyright de l'IEC ou si vous désirez obtenir des droits supplémentaires sur cette publication, utilisez les coordonnées ci-après ou contactez le Comité national de l'IEC de votre pays de résidence.

IEC Central Office
3, rue de Varembé
CH-1211 Geneva 20
Switzerland

Tel.: +41 22 919 02 11
Fax: +41 22 919 03 00
info@iec.ch
www.iec.ch

**About the IEC**
The International Electrotechnical Commission (IEC) is the leading global organization that prepares and publishes International Standards for all electrical, electronic and related technologies.

**About IEC publications**
The technical content of IEC publications is kept under constant review by the IEC. Please make sure that you have the latest edition, a corrigenda or an amendment might have been published.

**IEC Catalogue - webstore.iec.ch/catalogue**
The stand-alone application for consulting the entire bibliographical information on IEC International Standards, Technical Specifications, Technical Reports and other documents. Available for PC, Mac OS, Android Tablets and iPad.

**IEC publications search - www.iec.ch/searchpub**
The advanced search enables to find IEC publications by a variety of criteria (reference number, text, technical committee,…). It also gives information on projects, replaced and withdrawn publications.

**IEC Just Published - webstore.iec.ch/justpublished**
Stay up to date on all new IEC publications. Just Published details all new publications released. Available online and also once a month by email.

**Electropedia - www.electropedia.org**
The world's leading online dictionary of electronic and electrical terms containing more than 30 000 terms and definitions in English and French, with equivalent terms in 15 additional languages. Also known as the International Electrotechnical Vocabulary (IEV) online.

**IEC Glossary - std.iec.ch/glossary**
More than 60 000 electrotechnical terminology entries in English and French extracted from the Terms and Definitions clause of IEC publications issued since 2002. Some entries have been collected from earlier publications of IEC TC 37, 77, 86 and CISPR.

**IEC Customer Service Centre - webstore.iec.ch/csc**
If you wish to give us your feedback on this publication or need further assistance, please contact the Customer Service Centre: csc@iec.ch.

---

**A propos de l'IEC**
La Commission Electrotechnique Internationale (IEC) est la première organisation mondiale qui élabore et publie des Normes internationales pour tout ce qui a trait à l'électricité, à l'électronique et aux technologies apparentées.

**A propos des publications IEC**
Le contenu technique des publications IEC est constamment revu. Veuillez vous assurer que vous possédez l'édition la plus récente, un corrigendum ou amendement peut avoir été publié.

**Catalogue IEC - webstore.iec.ch/catalogue**
Application autonome pour consulter tous les renseignements bibliographiques sur les Normes internationales, Spécifications techniques, Rapports techniques et autres documents de l'IEC. Disponible pour PC, Mac OS, tablettes Android et iPad.

**Recherche de publications IEC - www.iec.ch/searchpub**

La recherche avancée permet de trouver des publications IEC en utilisant différents critères (numéro de référence, texte, comité d'études,…). Elle donne aussi des informations sur les projets et les publications remplacées ou retirées.

**IEC Just Published - webstore.iec.ch/justpublished**

Restez informé sur les nouvelles publications IEC. Just Published détaille les nouvelles publications parues. Disponible en ligne et aussi une fois par mois par email.

**Electropedia - www.electropedia.org**

Le premier dictionnaire en ligne de termes électroniques et électriques. Il contient plus de 30 000 termes et définitions en anglais et en français, ainsi que les termes équivalents dans 15 langues additionnelles. Egalement appelé Vocabulaire Electrotechnique International (IEV) en ligne.

**Glossaire IEC - std.iec.ch/glossary**
Plus de 60 000 entrées terminologiques électrotechniques, en anglais et en français, extraites des articles Termes et Définitions des publications IEC parues depuis 2002. Plus certaines entrées antérieures extraites des publications des CE 37, 77, 86 et CISPR de l'IEC.

**Service Clients - webstore.iec.ch/csc**

Si vous désirez nous donner des commentaires sur cette publication ou si vous avez des questions contactez-nous: csc@iec.ch.

Documents
Document Sharing Hub

Full document details: IEC 61340-4-6 2015

# IEC 61340-4-6

Edition 2.0 2015-05

# INTERNATIONAL STANDARD

# NORME INTERNATIONALE

## Electrostatics –
## Part 4-6: Standard test methods for specific applications – Wrist straps

## Électrostatique –
## Partie 4-6: Méthodes d'essai normalisées pour des applications spécifiques – Bracelets de conduction dissipative

INTERNATIONAL
ELECTROTECHNICAL
COMMISSION

COMMISSION
ELECTROTECHNIQUE
INTERNATIONALE

ICS 17.220.99; 29.020

ISBN 978-2-8322-2675-9

**Warning! Make sure that you obtained this publication from an authorized distributor.**
**Attention! Veuillez vous assurer que vous avez obtenu cette publication via un distributeur agréé.**

® Registered trademark of the International Electrotechnical Commission
Marque déposée de la Commission Electrotechnique Internationale

Documents
Document Sharing Hub

Full document details: IEC 61340-4-6 2015

CONTENTS

FOREWORD ..... 4
INTRODUCTION ..... 6
1 Scope ..... 7
2 Terms and definitions ..... 7
3 Testing levels and performance limits ..... 8
4 Test methods ..... 9
4.1 Test method applications ..... 9
4.2 Wrist strap continuity and resistance test ..... 10
4.2.1 Purpose of test ..... 10
4.2.2 Equipment ..... 10
4.2.3 Procedure ..... 11
4.2.4 Reporting ..... 11
4.3 Band resistance test ..... 11
4.3.1 Purpose of test ..... 11
4.3.2 Equipment ..... 11
4.3.3 Procedure (interior resistance) ..... 12
4.3.4 Procedure (exterior resistance) ..... 12
4.3.5 Reporting ..... 12
4.4 Band size requirements ..... 12
4.4.1 Purpose of test ..... 12
4.4.2 Equipment ..... 12
4.4.3 Self-adjusting bands ..... 12
4.4.4 “One-size-fits-all” bands ..... 13
4.5 Breakaway force ..... 13
4.5.1 Purpose of test ..... 13
4.5.2 Breakaway force measurement ..... 13
4.6 Connection integrity ..... 13
4.6.1 Purpose of test ..... 13
4.6.2 Equipment ..... 13
4.6.3 Procedure ..... 13
4.6.4 Reporting ..... 14
4.7 Ground cord extendibility ..... 14
4.7.1 Purpose of test ..... 14
4.7.2 Ground cord extendibility procedure ..... 14
4.8 Bending life test ..... 14
4.8.1 Purpose of test ..... 14
4.8.2 Equipment ..... 14
4.8.3 Procedure ..... 15
4.8.4 Reporting ..... 16
4.9 Manufacturer’s identification ..... 16
4.10 Identification of non-standard resistance value ..... 16
4.11 Wrist strap resistance ..... 16
4.11.1 Purpose of test ..... 16
4.11.2 Equipment ..... 16
4.11.3 Procedure ..... 16

AVA Documents
Document Sharing Hub
Full document details: IEC 61340-4-6 2015

4.11.4 Reporting ..... 16
4.12 Wrist strap system continuity test ..... 16
4.12.1 Purpose of test ..... 16
4.12.2 Equipment ..... 17
4.12.3 Procedure with ohmmeter ..... 18
4.12.4 Procedure with integrated checker ..... 18
4.12.5 Reporting ..... 18
Bibliography ..... 19

Figure 1 – Wrist strap resistance test apparatus ..... 11
Figure 2 – Mechanical ground cord flex tester (example) ..... 15
Figure 3 – Wrist strap system resistance test ..... 18

Table 1 – Evaluation testing ..... 9
Table 2 – Acceptance testing ..... 9
Table 3 – Periodic or verification testing ..... 9

Documents
Document Sharing Hub

Full document details: IEC 61340-4-6 2015

INTERNATIONAL ELECTROTECHNICAL COMMISSION

# ELECTROSTATICS –

## Part 4-6: Standard test methods for specific applications – Wrist straps

## FOREWORD

1) The International Electrotechnical Commission (IEC) is a worldwide organization for standardization comprising all national electrotechnical committees (IEC National Committees). The object of IEC is to promote international co-operation on all questions concerning standardization in the electrical and electronic fields. To this end and in addition to other activities, IEC publishes International Standards, Technical Specifications, Technical Reports, Publicly Available Specifications (PAS) and Guides (hereafter referred to as "IEC Publication(s)"). Their preparation is entrusted to technical committees; any IEC National Committee interested in the subject dealt with may participate in this preparatory work. International, governmental and non-governmental organizations liaising with the IEC also participate in this preparation. IEC collaborates closely with the International Organization for Standardization (ISO) in accordance with conditions determined by agreement between the two organizations.
2) The formal decisions or agreements of IEC on technical matters express, as nearly as possible, an international consensus of opinion on the relevant subjects since each technical committee has representation from all interested IEC National Committees.
3) IEC Publications have the form of recommendations for international use and are accepted by IEC National Committees in that sense. While all reasonable efforts are made to ensure that the technical content of IEC Publications is accurate, IEC cannot be held responsible for the way in which they are used or for any misinterpretation by any end user.
4) In order to promote international uniformity, IEC National Committees undertake to apply IEC Publications transparently to the maximum extent possible in their national and regional publications. Any divergence between any IEC Publication and the corresponding national or regional publication shall be clearly indicated in the latter.
5) IEC itself does not provide any attestation of conformity. Independent certification bodies provide conformity assessment services and, in some areas, access to IEC marks of conformity. IEC is not responsible for any services carried out by independent certification bodies.
6) All users should ensure that they have the latest edition of this publication.
7) No liability shall attach to IEC or its directors, employees, servants or agents including individual experts and members of its technical committees and IEC National Committees for any personal injury, property damage or other damage of any nature whatsoever, whether direct or indirect, or for costs (including legal fees) and expenses arising out of the publication, use of, or reliance upon, this IEC Publication or any other IEC Publications.
8) Attention is drawn to the Normative references cited in this publication. Use of the referenced publications is indispensable for the correct application of this publication.
9) Attention is drawn to the possibility that some of the elements of this IEC Publication may be the subject of patent rights. IEC shall not be held responsible for identifying any or all such patent rights.

International Standard IEC 61340-4-6 has been prepared by IEC technical committee 101: Electrostatics.

This second edition cancels and replaces the first edition published in 2010. This edition constitutes a technical revision.

This edition includes the following significant technical changes with respect to the previous edition:

a) editorial comments made during the review of the first edition were reviewed and incorporated where appropriate;
b) several changes were made to update the Figures and improve the presentation of metric measurements (Imperial measurements have been removed);

Documents
Document Sharing Hub

Full document details: IEC 61340-4-6 2015

c) the option of using an integrated checker for wrist strap system continuity testing has been added;

d) the evaluation and acceptance limit for wrist strap resistance has been changed so as to harmonize with IEC 61340-5-1.

The text of this standard is based on the following documents:

| FDIS | Report on voting |
|---|---|
| 101/463/FDIS | 101/476/RVD |

Full information on the voting for the approval of this standard can be found in the report on voting indicated in the above table.

This publication has been drafted in accordance with the ISO/IEC Directives, Part 2.

A list of all parts in the IEC 61340 series, under the general title *Electrostatics*, can be found on the IEC website.

The committee has decided that the contents of this publication will remain unchanged until the stability date indicated on the IEC website under "http://webstore.iec.ch" in the data related to the specific publication. At this date, the publication will be

- reconfirmed,
- withdrawn,
- replaced by a revised edition, or
- amended.

Documents
Document Sharing Hub

Full document details: IEC 61340-4-6 2015

# INTRODUCTION

This part of IEC 61340 has been developed to establish test methods for evaluating the electrical and mechanical attributes of wrist straps used in an electrostatic control program. Wrist straps are intended to connect the user to electrical ground, thus preventing electrostatic charge on a user's body from attaining a level that may damage ESD susceptible devices or assemblies.

Test methods and performance limits for evaluation, acceptance, and functional testing are provided.

Documents
Document Sharing Hub

Full document details: IEC 61340-4-6 2015

# ELECTROSTATICS –

## Part 4-6: Standard test methods for specific applications – Wrist straps

## 1 Scope

This part of IEC 61340 provides electrical and mechanical test methods and performance limits for evaluation, acceptance and periodic verification testing of wrist straps.

NOTE All dimensions are nominal except where indicated.

This standard is intended for testing wrist straps and wrist strap systems used for the grounding of personnel engaged in working with ESD sensitive assemblies and devices.

It does not address constant monitoring systems.

## 2 Terms and definitions

For the purposes of this document, the following terms and definitions apply.

**2.1**
**wrist strap**
assembled device consisting of a band and ground cord that is designed to provide electrical connection from a person's skin to ground

**2.2**
**wrist strap system**
wrist strap when properly worn by a person, where the electrical path includes the person, the band and the ground cord

**2.3**
**band**
portion of the wrist strap worn on the wrist

Note 1 to entry: The band maintains electrical contact with a person's skin.

**2.4**
**ground cord**
portion of the wrist strap that provides flexibility of movement while completing the electrical circuit between the band and ground

**2.5**
**evaluation testing**
testing of a wrist strap to determine its electrical and mechanical performance abilities

Note 1 to entry: Data are in the form of values from laboratory testing.

**2.6**
**acceptance testing**
incoming tests to confirm proper marking and electrical functionality

Note 1 to entry: Data are in the form of visual inspection records and values or pass/fail notation.

Documents
Document Sharing Hub

Full document details: IEC 61340-4-6 2015

**2.7**
**periodic verification testing**
end-use testing to confirm electrical functionality

Note 1 to entry: Data are in the form of pass/fail notation or resistance values.

**2.8**
**current-limiting resistance**
resistance value incorporated in series with the wrist strap's electrical path to ground

Note 1 to entry: This resistance limits electrical current that could pass through the ground cord in the event of inadvertent user contact with an electrical potential.

**2.9**
**resistance range**
user-specified upper and lower resistance values which define the user-acceptable resistance values of a wrist strap or wrist strap system

**2.10**
**strain relief**
construction feature designed to protect the connections and cord from premature failure

**2.11**
**breakaway force**
force required to disconnect the ground cord from the band

## 3 Testing levels and performance limits

This standard specifies different types of testing for wrist straps. Tables 1, 2 and 3 detail the three types of testing with the associated limits and subclause references to test methods. The methods provide appropriate tests for the different levels of wrist strap examination. Evaluation tests are laboratory tests for measuring the performance of a wrist strap or for the comparison of wrist straps. Acceptance tests provide methods for incoming goods inspection. Finally, the periodic verification or functional test is a simple check of electrical continuity. This test shall be used on a regular, user defined basis, to ensure that the wrist strap is electrically functional. Testing shall be carried out under ambient laboratory conditions. The temperature and humidity at the time of testing shall be recorded and reported in the test report. In the case of any dispute regarding test values, conditioning and testing shall be done at (23 ± 2) °C and (12 ± 3) % RH.

NOTE Testing has shown that environmental conditions do not significantly affect test results.

Documents
Document Sharing Hub
Full document details: IEC 61340-4-6 2015

**Table 1 – Evaluation testing**

| Electrical | Limit | Test reference |
|---|---|---|
| Wrist strap continuity and resistance | < 5 MΩ , or user defined value | 4.2 |
| Band resistance Interior:<br>Exterior: | ≤ 100 kΩ or user defined value<br>> 10 MΩ | 4.3 |
| | | |
| **Mechanical** | **Limit** | **Test reference** |
| Band size | As defined in 4.4 | 4.4 |
| Breakaway force | > 4,4 N and < 22,6 N | 4.5 |
| Cord and connector integrity | > 22,6 N and > 66 % of cord strength | 4.6 |
| Ground cord extendibility | Extension to manufacturer's specified length with no loss of electrical continuity | 4.7 |
| Bending life | ≥ 16 000 cycles | 4.8 |
| | | |
| **Marking** | **Limit** | **Test reference** |
| Manufacturer's identification | Logo and/or name | 4.9 |
| Identification of non-standard resistance value | Prominent feature or value marked | 4.10 |

**Table 2 – Acceptance testing**

| Electrical | Limit | Test reference |
|---|---|---|
| Wrist strap resistance | < 5 MΩ, or user defined value | 4.11 |
| | | |
| **Marking** | **Limit** | **Test reference** |
| Manufacturer's identification | Logo and/or name | 4.9 |
| Identification of non-standard Resistance value | Prominent feature or value marked | 4.10 |

**Table 3 – Periodic or verification testing**

| Electrical | Limit | Test reference |
|---|---|---|
| Wrist strap system continuity (as worn) | ≤ 35 MΩ, or user defined value[a] | 4.12 |
| [a] A user defined lower limit of resistance may be required for safety or other considerations. | | |

# 4 Test methods

## 4.1 Test method applications

Refer to Tables 1, 2 and 3 for test method applications.

WARNING: Test procedures described in this standard may expose personnel to potentially hazardous electrical conditions. Appropriate electrical hazard reduction practices should be exercised and proper earthing instructions for the equipment used should be followed when performing tests.

Documents
Document Sharing Hub

Full document details: IEC 61340-4-6 2015

## 4.2 Wrist strap continuity and resistance test

### 4.2.1 Purpose of test

This test measures the value of the current-limiting resistance and assures continuity between the discrete parts of the wrist strap.

### 4.2.2 Equipment

The equipment shall consist of the following:

- a test fixture (see Figure 1) comprising an insulative stand and two (25,0 ± 0,5) mm diameter stainless steel cylinders, with one cylinder fixed to the stand directly above the second. The second cylinder with a mass of (0,11 ± 0,01) kg is mounted in a slot in the stand that allows free vertical movement;
- an ohmmeter or other instrument(s) capable of reading from 50 kΩ to at least 100 MΩ with a test voltage of 7 V to 100 V DC open circuit;
- six samples of wrist straps.

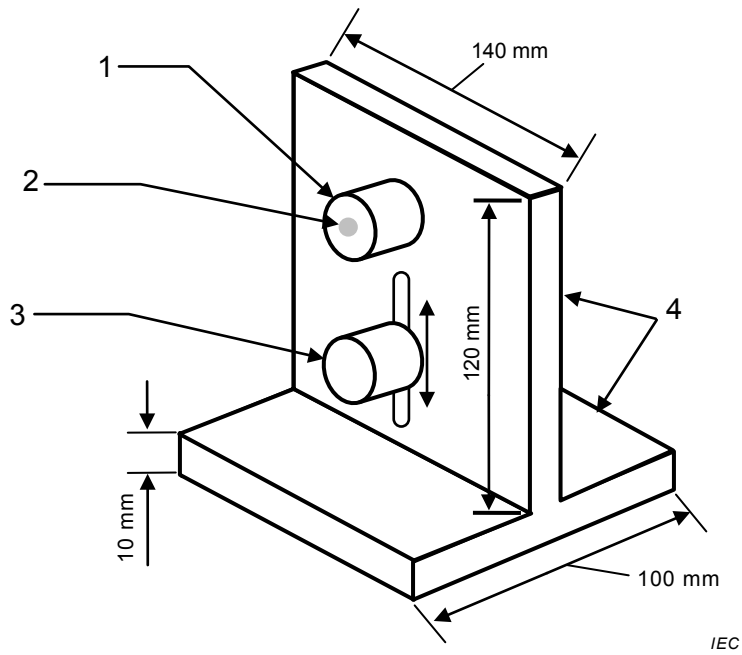


**Figure 1a – Band test fixture construction**

Documents
Document Sharing Hub
Full document details: IEC 61340-4-6 2015

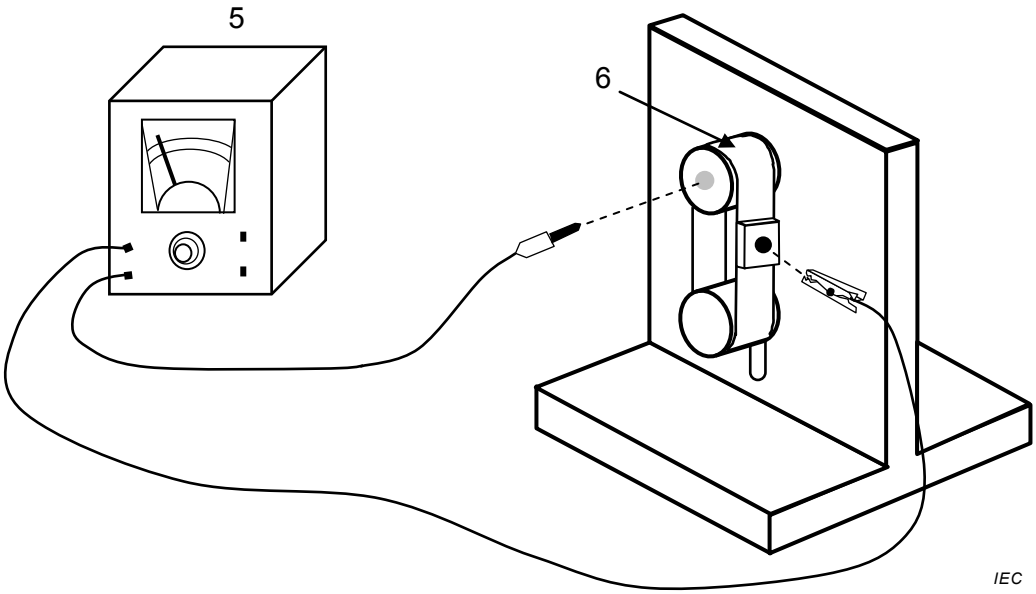


**Figure 1b – Test method**

**Key**

1 fixed metal cylinder test probe, (25,0 ± 0,5) mm diameter
2 hole for banana plug
3 movable metal cylinder test weight, (25,0 ± 0,5) mm diameter
4 insulative stand
5 ohmmeter
6 band

**Figure 1 – Wrist strap resistance test apparatus**

### 4.2.3 Procedure

Using the test fixture shown in Figure 1, place the band around the cylinders with the band interior toward the cylinders and the ground cord connector on the right side and parallel to the cylinders, evenly spaced between the cylinders. Allow the 0,11 kg cylinder to move freely and stress the band.

Connect the ground cord to the band.

Connect the ohmmeter to the top cylinder and to the ground connector of the ground cord. Measure and record the resistance value.

Repeat the procedure for a total of six wrist straps.

### 4.2.4 Reporting

Report the resistance for each wrist strap.

## 4.3 Band resistance test

### 4.3.1 Purpose of test

Resistance of the band interior and exterior is determined.

### 4.3.2 Equipment

See 4.2.2.

Documents
Document Sharing Hub
Full document details: IEC 61340-4-6 2015