IEC 61340-4-7

Edition 1.0 2010-01

INTERNATIONAL STANDARD

NORME INTERNATIONALE

Withdrawn

Electrostatics –
Part 4-7: Standard test methods for specific applications – Ionization

Électrostatique –
Partie 4-7: Méthodes d'essai normalisées pour des applications spécifiques – Ionisation

IEC 61340-4-7:2010

Documents
Document Sharing Hub

Full document details: IEC 61340-4-7 2010

THIS PUBLICATION IS COPYRIGHT PROTECTED

Copyright © 2010 IEC, Geneva, Switzerland

All rights reserved. Unless otherwise specified, no part of this publication may be reproduced or utilized in any form or by any means, electronic or mechanical, including photocopying and microfilm, without permission in writing from either IEC or IEC's member National Committee in the country of the requester.
If you have any questions about IEC copyright or have an enquiry about obtaining additional rights to this publication, please contact the address below or your local IEC member National Committee for further information.

Droits de reproduction réservés. Sauf indication contraire, aucune partie de cette publication ne peut être reproduite ni utilisée sous quelque forme que ce soit et par aucun procédé, électronique ou mécanique, y compris la photocopie et les microfilms, sans l'accord écrit de la CEI ou du Comité national de la CEI du pays du demandeur.
Si vous avez des questions sur le copyright de la CEI ou si vous désirez obtenir des droits supplémentaires sur cette publication, utilisez les coordonnées ci-après ou contactez le Comité national de la CEI de votre pays de résidence.

IEC Central Office
3, rue de Varembé
CH-1211 Geneva 20
Switzerland
Email: inmail@iec.ch
Web: www.iec.ch

About the IEC

The International Electrotechnical Commission (IEC) is the leading global organization that prepares and publishes International Standards for all electrical, electronic and related technologies.

About IEC publications

The technical content of IEC publications is kept under constant review by the IEC. Please make sure that you have the latest edition, a corrigenda or an amendment might have been published.

- Catalogue of IEC publications: www.iec.ch/searchpub
The IEC on-line Catalogue enables you to search by a variety of criteria (reference number, text, technical committee,…). It also gives information on projects, withdrawn and replaced publications.
- IEC Just Published: www.iec.ch/online_news/justpub
Stay up to date on all new IEC publications. Just Published details twice a month all new publications released. Available on-line and also by email.
- Electropedia: www.electropedia.org
The world's leading online dictionary of electronic and electrical terms containing more than 20 000 terms and definitions in English and French, with equivalent terms in additional languages. Also known as the International Electrotechnical Vocabulary online.
- Customer Service Centre: www.iec.ch/webstore/custserv
If you wish to give us your feedback on this publication or need further assistance, please visit the Customer Service Centre FAQ or contact us:
Email: csc@iec.ch
Tel.: +41 22 919 02 11
Fax: +41 22 919 03 00

A propos de la CEI

La Commission Electrotechnique Internationale (CEI) est la première organisation mondiale qui élabore et publie des normes internationales pour tout ce qui a trait à l'électricité, à l'électronique et aux technologies apparentées.

A propos des publications CEI

Le contenu technique des publications de la CEI est constamment revu. Veuillez vous assurer que vous possédez l'édition la plus récente, un corrigendum ou amendement peut avoir été publié.

- Catalogue des publications de la CEI: www.iec.ch/searchpub/cur_fut-f.htm
Le Catalogue en-ligne de la CEI vous permet d'effectuer des recherches en utilisant différents critères (numéro de référence, texte, comité d'études,…). Il donne aussi des informations sur les projets et les publications retirées ou remplacées.
- Just Published CEI: www.iec.ch/online_news/justpub
Restez informé sur les nouvelles publications de la CEI. Just Published détaille deux fois par mois les nouvelles publications parues. Disponible en-ligne et aussi par email.
- Electropedia: www.electropedia.org
Le premier dictionnaire en ligne au monde de termes électroniques et électriques. Il contient plus de 20 000 termes et définitions en anglais et en français, ainsi que les termes équivalents dans les langues additionnelles. Egalement appelé Vocabulaire Electrotechnique International en ligne.
- Service Clients: www.iec.ch/webstore/custserv/custserv_entry-f.htm
Si vous désirez nous donner des commentaires sur cette publication ou si vous avez des questions, visitez le FAQ du Service clients ou contactez-nous:
Email: csc@iec.ch
Tél.: +41 22 919 02 11
Fax: +41 22 919 03 00

Withdrawn

Documents
Document Sharing Hub

Full document details: IEC 61340-4-7 2010

IEC 61340-4-7

Edition 1.0 2010-01

INTERNATIONAL STANDARD

NORME INTERNATIONALE

withdrawn

Electrostatics –
Part 4-7: Standard test methods for specific applications – Ionization

Électrostatique –
Partie 4-7: Méthodes d'essai normalisées pour des applications spécifiques – Ionisation

INTERNATIONAL
ELECTROTECHNICAL
COMMISSION

COMMISSION
ELECTROTECHNIQUE
INTERNATIONALE

PRICE CODE
CODE PRIX U

ICS 17.200.99; 29.020

ISBN 978-2-88912-463-3

® Registered trademark of the International Electrotechnical Commission
Marque déposée de la Commission Electrotechnique Internationale

Documents
Document Sharing Hub

Full document details: IEC 61340-4-7 2010

CONTENTS

FOREWORD 3
INTRODUCTION 5
1 Scope 6
2 Normative references 6
3 Terms and definitions 7
4 Safety requirements 8
4.1 Personnel safety 8
4.2 Electrical 9
4.3 Ozone 9
4.4 Radioactive 9
4.5 X-ray 9
4.6 Installation 9
5 Test equipment 9
6 Specific requirements for equipment categories 10
6.1 Room ionization 11
6.2 Laminar flow hood ionization 11
6.3 Worksurface Ionization 12
6.4 Compressed gas ionizers – Guns and nozzles 12
Annex A (informative) Standard test method for the performance of ionizers 21
Annex B (normative) Method of measuring the capacitance of an isolated conductive plate 27
Bibliography 30

Figure 1 – Charged plate monitor components 13
Figure 2– Charged plate detail 13
Figure 3 – Test locations for room ionization – AC grids and DC bar systems 14
Figure 4 – Test locations for room ionization – Single polarity emitter systems 14
Figure 5 – Test locations for room ionization – Dual DC line systems 15
Figure 6 – Test locations for room ionization – Pulsed DC emitter systems 15
Figure 7 – Test locations for vertical laminar flow hood – Top view 16
Figure 8 – Vertical laminar flow hood – Side view 16
Figure 9 – Test locations for horizontal laminar flow hood – Top view 17
Figure 10 – Horizontal laminar flow hood – Side view 17
Figure 11 – Test locations for benchtop ionizer – Top view 18
Figure 12 – Benchtop ionizer – Side view 18
Figure 13 – Test locations for overhead ionizer – Top view 19
Figure 14 – Overhead ionizer – Side view 19
Figure 15 – Test locations for compressed gas ionizer (gun or nozzle) – Side view 20

Table 1 – Test set-ups and test locations 10
Table B.1 – Example measurement data 28

Withdrawn

AVA Documents
Document Sharing Hub

Full document details: IEC 61340-4-7 2010

INTERNATIONAL ELECTROTECHNICAL COMMISSION

ELECTROSTATICS –

Part 4-7: Standard test methods for specific applications – Ionization

FOREWORD

1) The International Electrotechnical Commission (IEC) is a worldwide organization for standardization comprising all national electrotechnical committees (IEC National Committees). The object of IEC is to promote international co-operation on all questions concerning standardization in the electrical and electronic fields. To this end and in addition to other activities, IEC publishes International Standards, Technical Specifications, Technical Reports, Publicly Available Specifications (PAS) and Guides (hereafter referred to as "IEC Publication(s)"). Their preparation is entrusted to technical committees; any IEC National Committee interested in the subject dealt with may participate in this preparatory work. International, governmental and non-governmental organizations liaising with the IEC also participate in this preparation. IEC collaborates closely with the International Organization for Standardization (ISO) in accordance with conditions determined by agreement between the two organizations.
2) The formal decisions or agreements of IEC on technical matters express, as nearly as possible, an international consensus of opinion on the relevant subjects since each technical committee has representation from all interested IEC National Committees.
3) IEC Publications have the form of recommendations for international use and are accepted by IEC National Committees in that sense. While all reasonable efforts are made to ensure that the technical content of IEC Publications is accurate, IEC cannot be held responsible for the way in which they are used or for any misinterpretation by any end user.
4) In order to promote international uniformity, IEC National Committees undertake to apply IEC Publications transparently to the maximum extent possible in their national and regional publications. Any divergence between any IEC Publication and the corresponding national or regional publication shall be clearly indicated in the latter.
5) IEC itself does not provide any attestation of conformity. Independent certification bodies provide conformity assessment services and, in some areas, access to IEC marks of conformity. IEC is not responsible for any services carried out by independent certification bodies.
6) All users should ensure that they have the latest edition of this publication.
7) No liability shall attach to IEC or its directors, employees, servants or agents including individual experts and members of its technical committees and IEC National Committees for any personal injury, property damage or other damage of any nature whatsoever, whether direct or indirect, or for costs (including legal fees) and expenses arising out of the publication, use of, or reliance upon, this IEC Publication or any other IEC Publications.
8) Attention is drawn to the Normative references cited in this publication. Use of the referenced publications is indispensable for the correct application of this publication.
9) Attention is drawn to the possibility that some of the elements of this IEC Publication may be the subject of patent rights. IEC shall not be held responsible for identifying any or all such patent rights.

International Standard IEC 61340-4-7 has been prepared by IEC technical committee 101: Electrostatics.

The text of this standard is based on ANSI/ESD STM3.1-2006. It was submitted to the National Committees for voting under the Fast Track Procedure.

This bilingual version (2011-04) replaces the English version.

The text of this standard is also based on the following documents:

FDIS	Report on voting
101/292/FDIS	101/299/RVD

Full information on the voting for the approval of this standard can be found in the report on voting indicated in the above table.

Withdrawn

AVA Documents Document Sharing Hub

Full document details: IEC 61340-4-7 2010

The French version of this standard has not been voted upon.

This publication has been drafted in accordance with the ISO/IEC Directives, Part 2.

A list of all parts in the IEC 61340 series, under the general title *Electrostatics*, can be found on the IEC website.

The committee has decided that the contents of this publication will remain unchanged until the stability date indicated on the IEC web site under "http://webstore.iec.ch" in the data related to the specific publication. At this date, the publication will be

- reconfirmed,
- withdrawn,
- replaced by a revised edition, or
- amended.

withdrawn

Documents
Document Sharing Hub

Full document details: IEC 61340-4-7 2010

INTRODUCTION

Grounding is the primary method used to limit static charge fwhen protecting electrostatic discharge-susceptible items in the work environment. However, grounding methods are not effective in removing static charges from the surfaces of non-conductive (insulative) or isolated conductive materials. Air ionization techniques may be employed to reduce these charges as the active parameters in charge neutralization are the conductivities of the air for each polarity. It would be appropriate to measure either the conductivities themselves or the ion concentrations for each polarity as this would determine the ability of the ionized air to neutralize a charge in a given location. Annex A provides information on performance of ionizers.

In practice, these measurements are difficult to make. A more feasible way of evaluating the ability of an ionizer to neutralize a static charge is to directly measure the rate of charge decay. Charges to be neutralized may be located on insulators as well as on isolated conductors. It is difficult to charge an insulator reliably and repeatably. Charge neutralization is more easily evaluated by measuring the rate of decay of the voltage of an isolated conductive plate. The measurement of this decay should not interfere with or change the nature of the actual decay. Four practical methods of air ionization are addressed in this standard test method:

a) radioactive emission;

b) high-voltage corona from a.c. electric fields;

c) high-voltage corona from d.c. electric fields;

d) soft X-ray emission.

This part of IEC 61340 provides test methods and procedures that can be used when evaluating ionization equipment. The objective of the test methods is to generate meaningful, reproducible data. The test methods are not meant to be a recommendation for any particular ionizer configuration. The wide variety of ionizers, and the environments within which they are used, will often require test methods different from those described in this part of IEC 61340. Users of this standard should be prepared to adapt the test methods as required to produce meaningful data in their own application of ionizers.

Similarly, the test conditions chosen in this part of IEC 61340 do not represent a recommendation for acceptable ionizer performance. There is a wide range of item sensitivities to static charge. There is also a wide range of environmental conditions affecting the operation of ionizers. Performance specifications should be agreed upon between the user and manufacturer of the ionizer in each application. Users of this standard test method should be prepared to establish reasonable performance requirements for their own application of ionizers.

Annex B has been provided in order to provide a method for measuring capacitance of the charged plate.

Withdrawn

AVA Documents
Document Sharing Hub

Full document details: IEC 61340-4-7 2010

ELECTROSTATICS –

Part 4-7: Standard test methods for specific applications – Ionization

Withdrawn

1 Scope

This part of IEC 61340 provides test methods and procedures for evaluating and selecting air ionization equipment and systems (ionizers).

This standard establishes measurement techniques, under specified conditions, to determine offset voltage (ion balance) and discharge (charge neutralization) time for ionizers.

This standard does not include measurements of electromagnetic interference (EMI), or uses of ionizers in connection with ordnance, flammables, explosive items or electrically initiated explosive devices.

As contained in this standard, the test methods and test conditions may be used by manufacturers of ionizers to provide performance data describing their products. Users of ionizers are urged to modify the test methods and test conditions for their specific application in order to qualify ionizers for use, or to make periodic verifications of ionizer performance (refer to ESD SP3.3). The user will need to decide the extent of the data required for each application.

2 Normative references

The following referenced documents are indispensable for the application of this document. For dated references, only the edition cited applies. For undated references, the latest edition of the referenced document (including any amendments) applies.

ESD ADV1.0, *Glossary of terms*[1]

ESD SP3.3, *Standard practice for protection of electrostatic discharge susceptible items – Periodic verification of air ionizers*[1]

29 CFR 1910.1000, *Ozone, (OSHA) Air contaminants*[2]

29 CFR 1910.95, *(OSHA) Occupational noise exposure*[2]

29 CFR 1910.242 (b), *(OSHA) Compressed air used for cleaning*[2]

10 CFR 20, *(NRC) Standards for protection against radiation*[2]

21 CFR 1020, *(FDA) Performance standards for ionizing radiation emitting products*[2]

---

1 ESD Association, 7900 Turin Road, Bldg. 3, Rome, NY 13440-2069, 315-339-6937, www.esda.org

2 CFR (Code of Federal Regulations) U.S. Government printing office, 732 N. Capitol Street NW, Washington, DC 20401, 866-512-1800, http://bookstore.gpo.gov

AVA Documents
Document Sharing Hub

Full document details: IEC 61340-4-7 2010

3 Terms and definitions

For the purposes of this document, the following terms and definitions, in addition to those specified in the ESD association glossary of terms, apply.

3.1
air conductivity
ability of air to conduct (pass) an electric current under the influence of an electric field

3.2
air Ions
molecular clusters of about ten molecules (water, impurities, etc.) bound by polarization forces to a singly charged oxygen or nitrogen molecule

3.3
charge decay
decrease and/or neutralization of a net electrostatic charge

3.4
charge induction
redistribution of charge in an isolated conductor when placed in an electric field (e.g. from a charged body)

NOTE Momentary grounding of such a conductor would result in its gaining a net charge.

3.5
charged plate monitor
CPM
instrument used to measure the charge neutralization properties of ionization equipment

3.6
compressed gas ionizer
ionization devices that can be used to neutralize charged surfaces and/or remove surface particles with pressurized gas

NOTE This type of ionizer may be used to ionize the gas within production equipment.

3.7
corona
production of positive and negative ions by a very localized high electric field

NOTE The field is normally established by applying a high voltage to a conductor in the shape of a sharp point or wire.

3.8
decay rate
decrease of charge or voltage per unit time

3.9
discharge time
time necessary for a voltage (due to an electrostatic charge) to decay from an initial value to some arbitrarily chosen final value

3.10
emitter
conducting sharp object, usually a needle or wire, which will cause a corona discharge when kept at a high potential

Withdrawn

AVA Documents
Document Sharing Hub

Full document details: IEC 61340-4-7 2010

3.11
horizontal laminar flow
non-turbulent airflow in a horizontal direction

3.12
ion balance
(see offset voltage)

3.13
ionizer
device that is designed to generate positive and/or negative air ions

3.14
isolated conductor
non-grounded conductor

3.15
laminar flow hood ionization
these devices or systems provide local area ionization coverage in vertical or horizontal laminar flow hoods or benches

3.16
offset voltage
observed voltage on the isolated conductive plate of a charged plate monitor (CPM) that has been placed in an ionized environment

3.17
peak offset voltage
for pulsed ionizers, the maximum value of the offset voltage for each polarity, as the ionizer cycles between positive and negative ion outputs

3.18
room ionization
ionization systems that provide large area coverage with air ions

3.19
worksurface ionization (formerly **tabletop ionization**)
ionization devices or systems used to control static charges at a workstation

NOTE This type includes benchtop ionizers, overhead worksurface ionizers and laminar flow hood ionizers.

3.20
vertical laminar flow
non-turbulent airflow in a vertical direction

4 Safety requirements

In addition to the safety issues mentioned in this clause, there may be local, state, national and international safety standards or regulations that affect the operation of ionizers. Users of this standard test method should determine if such requirements will apply to their installation of ionizers.

4.1 Personnel safety

4.1.1 The procedures and equipment described in this part of IEC 61340 may expose personnel to hazardous electrical conditions. Users of this standard, therefore, are responsible for selecting equipment that complies with applicable laws, regulatory codes and

Withdrawn

AVA Documents
Document Sharing Hub

Full document details: IEC 61340-4-7 2010

both external and internal policy. Users are also cautioned that this standard cannot replace or supersede any requirements for personnel safety.

Ground fault circuit interrupters (GFCI) and other safety protection should be considered wherever personnel may come into contact with electrical sources.

Electrical hazard reduction practices should be exercised and proper grounding instructions for the equipment must be followed.

4.2 Electrical

In the case of high-voltage ionizers with exposed emitters, the corona points or wires should be peak current limited to applicable safety requirements for the installation.

4.3 Ozone

The OSHA limit, as defined by 29 CFR 1910.1000, shall not be exceeded. If ozone-sensitive components are in the vicinity of an ionizer, the manufacturer should provide information and/or evaluation suggestions for the situation.

4.4 Radioactive

The manufacturer is required to obtain a license from the Nuclear Regulatory Commission (NRC) or the NRC agreement state in which the equipment is manufactured. The manufacturer and user shall meet all requirements of 10 CFR 20 and any other applicable government regulations.

4.5 X-ray

The manufacturer and user shall meet all requirements of 21 CFR 1020 and any other applicable government regulations. Typically, state and local government agencies will require the device to be registered at its use location. X-ray devices should be installed in such a way that prevents accidental exposure to personnel. Typically this will include some type of enclosure for the X-ray device and electrical interlocking to turn the X-ray device off when the enclosure is opened.

4.6 Installation

Installation should conform to applicable electrical, mechanical and safety codes, as well as individual facility standards. Some equipment, such as compressed gas guns and nozzles may have to meet other requirements such as 29 CFR 1910.95 for noise exposure and 29 CFR 1910.242 for personnel safety with compressed gas devices. Installation techniques should also be applicable to the particular environment in which the ionizer is to be installed (e.g., cleanrooms).

5 Test equipment

5.1 The instrument recommended in this standard to make performance measurements on air ionization equipment is the CPM (refer to Figure 1). The conductive plate shall be 15 cm by 15 cm (6“ by 6“) with a minimum capacitance of 15 pF when mounted in the test fixture without electrical hook-ups. The total capacitance of the test circuit, with plate, shall be 20 pF ± 2 pF (refer to Annex B). The instrument recommended by this standard test method may also be used for the periodic verification of air ionizers (refer to ESD SP3.3).

5.2 There shall be no objects, grounded or otherwise, closer than dimension "A" of the conductive plate except the supporting insulators or plate voltage contacts, as shown in Figure 2 (refer to Annex B).

Withdrawn

AVA Documents
Document Sharing Hub

Full document details: IEC 61340-4-7 2010

5.3 The isolated conductive plate, when charged to the desired test voltage, shall not discharge more than 10 % of the test voltage within 5 min, in the absence of ionization.

5.4 The voltage on the plate shall be monitored in such a way that the system conforms to 5.1, 5.2 and 5.3. The response time of the monitoring device shall be sufficient to accurately measure changing plate voltages.

5.5 The voltage source used to charge the plate should be current limited so as to meet the requirements of 4.1.

6 Specific requirements for equipment categories

For the types of ionization equipment listed in 6.1, 6.2, 6.3 and 6.4, the following specific requirements apply:

a) **Discharge time test** – The conductive plate of the test fixture shall be charged to an initial test voltage and allowed to discharge to 10 % of the initial test voltage. The time required shall be monitored and recorded for both polarities of initial charge. This time is referred to as the discharge time (refer to 5.1 and Figure 1).

b) **Offset voltage test** – The conductive plate shall be momentarily grounded to remove any residual charges and to verify zero of the monitoring device. The plate is then monitored within the ionized environment, per the procedure described for each equipment category. The resulting observed voltage is referred to as the offset voltage.

c) **Locations** – The discharge time and offset voltage should be measured for each test location described in the test location figures (see Table 1).

d) **Same conditions** – Discharge time and offset voltage shall be measured under the same conditions without any equipment adjustments. If ionizers from different categories are to be compared, the same test voltages shall be used for all tests.

e) **Peak offset voltage** – In the case of pulsed ionizers, offset voltage should be measured and reported in peak values using the test equipment described in 5.1.

f) **Other parameters** – Application specific parameters such as humidity, temperature, air velocity, etc., should be recorded.

Table 1 – Test set-ups and test locations

Equipment category	Figure references	Number of test locations	Offset voltage measurement time interval	Charged plate initial voltage
Room ionization				
Grids, AC	3	2	(1 to 5) min	1 000
Bars, pulsed and DC	3	2	(1 to 5) min	1 000
Single polarity emitter	4	3	(1 to 5) min	1 000
Dual DC Line	5	3	(1 to 5) min	1 000
Pulsed DC emitter	6	2	(1 to 5) min	1 000
Laminar flow hood				
Vertical	7 and 8	8	(1 to 5) min	1 000
Horizontal	9 and 10	6	(1 to 5) min	1 000
Worksurface ionization				
Benchtop	11 and 12	12	(1 to 5) min	1 000
Overhead	13 and 14	12	(1 to 5) min	1 000
Compressed gas ionization				
Guns and nozzles	15	1	10 s to 1 min	1 000

Documents
Document Sharing Hub
Full document details: IEC 61340-4-7 2010

6.1 Room ionization

6.1.1 The area around the charged plate monitor should be cleared for a horizontal distance of 60“ in all directions. The ionization system should be operated for a minimum of 30 min to stabilize conditions in the test area.

6.1.2 During the test, the test technician should be grounded and stand outside the 60“ cleared area.

6.1.3 Discharge time from a 1 000 V initial voltage to a 100 V final voltage shall be measured for both positive (+) and negative (-) polarities.

6.1.4 The air velocity at the test location should be recorded.

6.1.5 Measurements should be taken with the charged plate monitor at a distance of 60“ from the ionizer under test. Since installed ionizer heights may vary, a consistent measurement height should be selected for the evaluation of different systems. This height and the ionizer mounting height shall be recorded in the test results.

6.1.6 The minimum number of test locations is determined by the type of system. (See Table 1 and refer to Figures 3 through 6.)

6.1.7 Discharge time as described in Clause 6, point a), should be measured at each test location.

6.1.8 Offset voltage as described in Clause 6, points b) and e) should be determined at each test location. Offset voltage shall be measured after a period of at least 1 mkin to allow the reading to stabilize (5 min maximum).

6.2 Laminar flow hood ionization

6.2.1 The test should be performed on a surface that does not contain obstructions to airflow. Unless otherwise specified, the test surface should be static dissipative or conductive and properly grounded.

6.2.2 The test technician should be properly grounded.

6.2.3 Discharge time from a 1 000 V initial voltage to a 100 V final voltage shall be measured for both positive (+) and negative (-) polarities.

6.2.4 The air velocity at test location TP4, as shown in Figures 7 or 9, should be recorded.

6.2.5 For a vertical laminar flow hood, the test set-up is shown in Figures 7 and 8. Data should be taken at test positions TP1 through TP8 as shown in Figure 7.

6.2.6 For a horizontal laminar flow hood, the test set-up is shown in Figures 9 and 10. Data should be taken at test positions TP1 through TP6 as shown in Figure 9.

6.2.7 Discharge time as described in Clause 6, point a), should be measured at each test location.

6.2.8 Offset voltage as described in Clause 6, points b) and e) should be determined at each test location. Offset voltage shall be measured after a period of at least 1 min, or as necessary to allow the reading to stabilize (5 min maximum).

Withdrawn

AVA Documents
Document Sharing Hub

Full document details: IEC 61340-4-7 2010

6.3 Worksurface Ionization

6.3.1 The test should be performed on a surface that does not contain obstructions to airflow. Unless otherwise specified the test surface should be static dissipative or conductive and properly grounded.

6.3.2 The test technician should be properly grounded.

6.3.3 Discharge time from a 1 000 V initial voltage to a 100 V final voltage shall be measured for both positive (+) and negative (-) polarities.

6.3.4 The unit should be measured with the heater off, if so equipped. The unit should be tested with any filters in place if so equipped. Measurements should be made at both minimum and maximum airflows for units with variable airflow. The air velocity should be measured and included in the test results. End users should test ionizers with the same configuration of operating heaters and filters that they intend to use.

6.3.5 For benchtop units, the ionizer should be placed as shown in Figures 11 and 12. Airflow should be directed at test location TP2 and measured at test locations TP2 and TP5. The charged plate monitor shall face the ionizer. Measurements with the charged plate monitor should be made at test locations TP1 through TP12 as shown in Figure 11.

6.3.6 For overhead units, the ionizer should be placed as shown in Figures 13 and 14. Airflow should be measured at test locations TP5 and TP8. Measurements with the charged plate monitor should be made at test locations TP1 through TP12 as shown in Figure 13.

6.3.7 Discharge time as described in Clause 6, point a), should be measured at each test location.

6.3.8 Offset voltage as described in Clause 6, points b) and e) should be determined at each test location. Offset voltage shall be measured after a period of at least 1 min, or as necessary to allow the reading to stabilize (5 min maximum).

6.4 Compressed gas ionizers – Guns and nozzles

6.4.1 The test should be performed on a surface that does not contain obstructions to airflow. Unless otherwise specified, the test surface should be static dissipative or conductive and properly grounded.

6.4.2 The test technician should be properly grounded.

6.4.3 Discharge time from a 1 000 V initial voltage to a 100 V final voltage shall be measured for both positive (+) and negative (-) polarities.

6.4.4 Unless otherwise specified, the input pressure should be 30 psig (pounds per square inch gauge). End users should test compressed gas ionizers in the same configuration of input pressure and distance that they intend to use.

6.4.5 The tests should be performed using the test set-up shown in Figure 15.

6.4.6 Discharge time as described in Clause 6, point a), should be measured at the test location.

6.4.7 Offset voltage as described in Clause 6, points b) and e) should be determined at the test location. Offset voltage shall be measured after a period of at least 10 s or as necessary to allow the reading to stabilize (1 min maximum).

Withdrawn

AVA Documents
Document Sharing Hub

Full document details: IEC 61340-4-7 2010

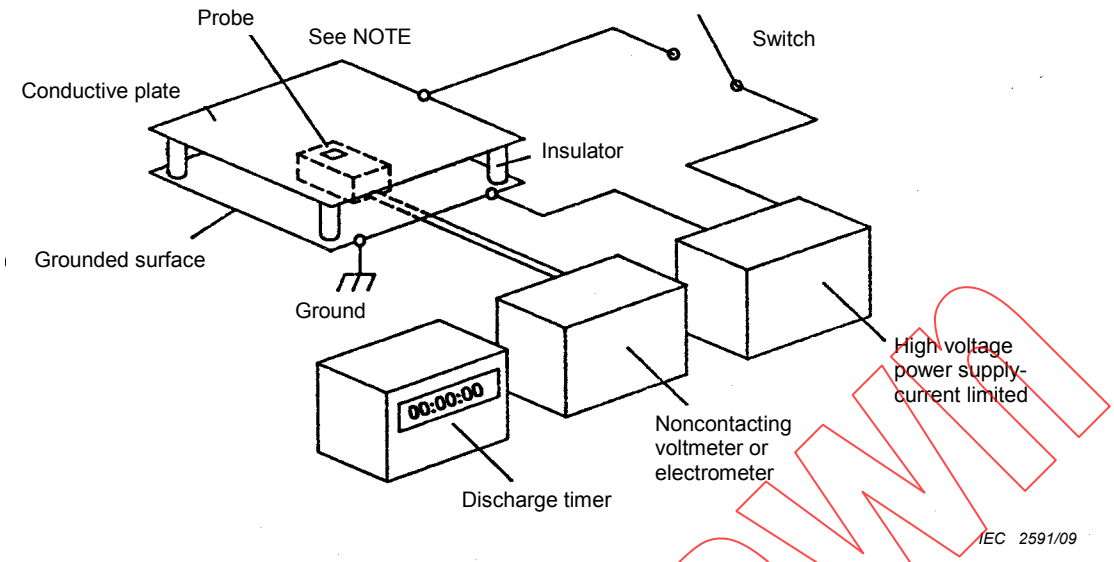

NOTE See Figure 2.

Figure 1 – Charged plate monitor (CPM) components

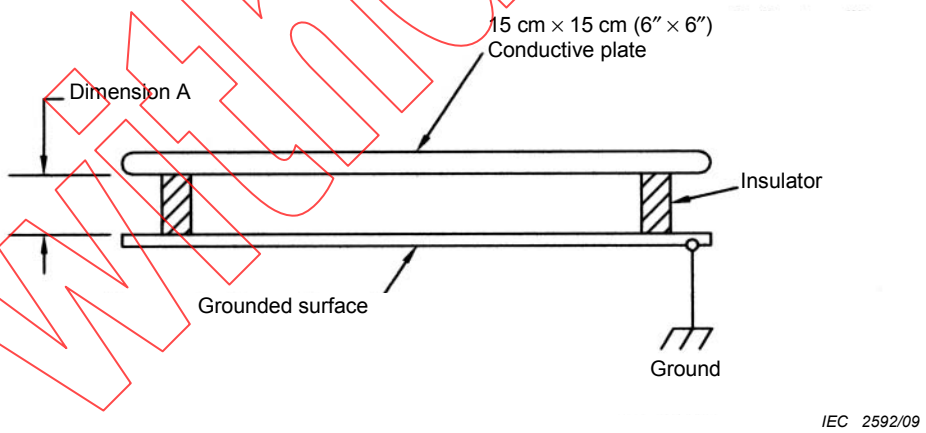

NOTE Grounded surface should be ≥ 15 cm (6“) square.

Figure 2 – Charged plate detail

Withdrawn

Documents
Document Sharing Hub
Full document details: IEC 61340-4-7 2010

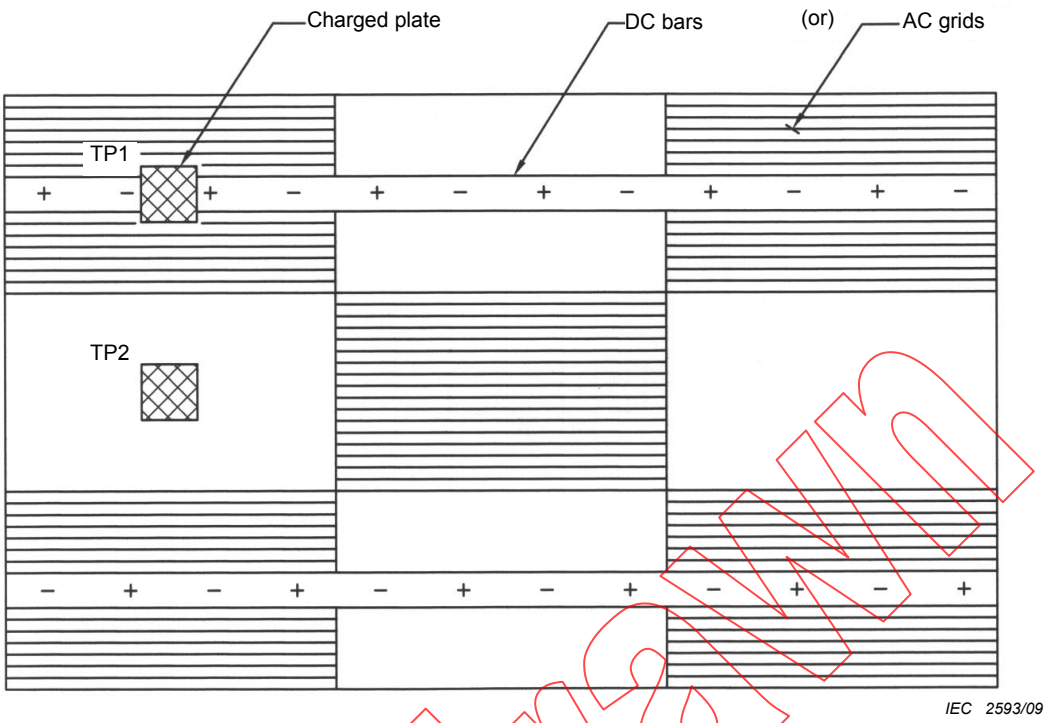

NOTE 1 Example for AC grids (less than 100 % coverage) and pulsed or steady-state DC bars.

NOTE 2 TP1 is directly under grid or bar while TP2 is centered between grids or bars.

Figure 3 – Test locations for room ionization – AC grids and DC bar systems

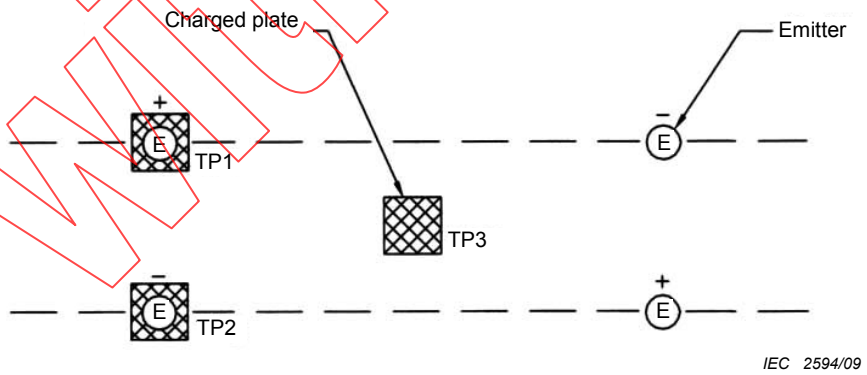

NOTE Three measurement locations required.

Figure 4 – Test locations for room ionization – Single polarity emitter systems

Withdrawn

Documents
Document Sharing Hub
Full document details: IEC 61340-4-7 2010

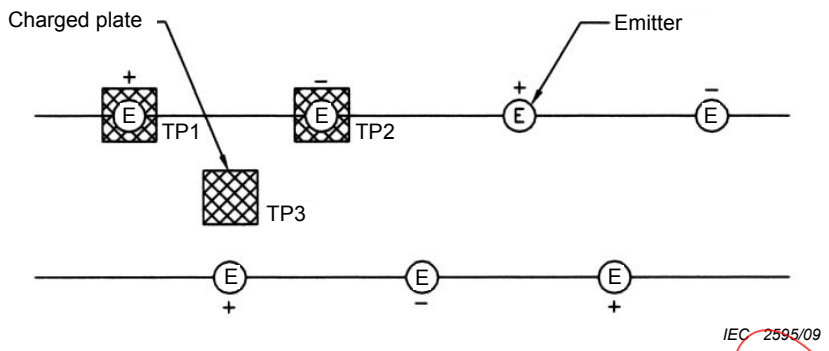

NOTE Three measurement locations required.

Figure 5 – Test locations for room ionization – Dual DC line systems

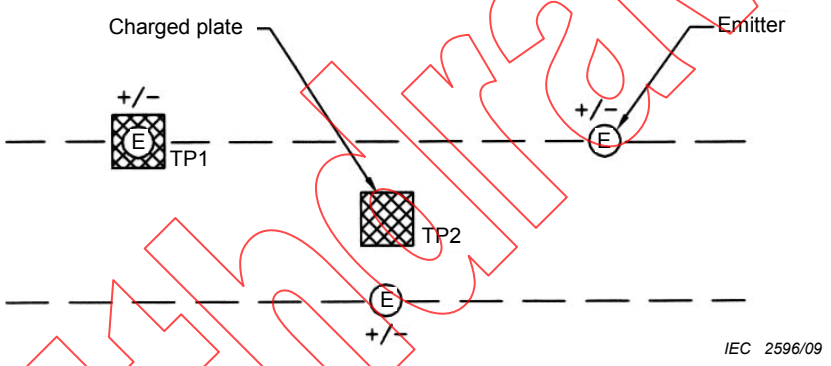

NOTE Two measurement locations required.

Figure 6 – Test locations for room ionization – Pulsed DC emitter systems

withdrawn

Documents
Document Sharing Hub
Full document details: IEC 61340-4-7 2010

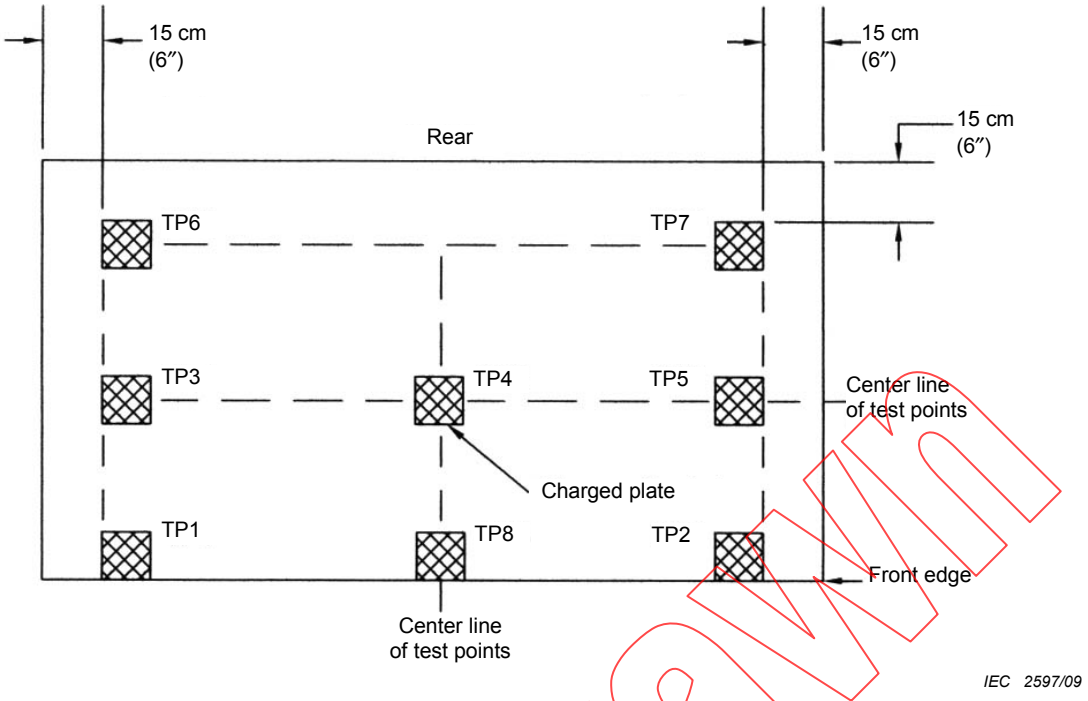

NOTE Eight measurement locations required.

Figure 7 – Test locations for vertical laminar flow hood – Top view

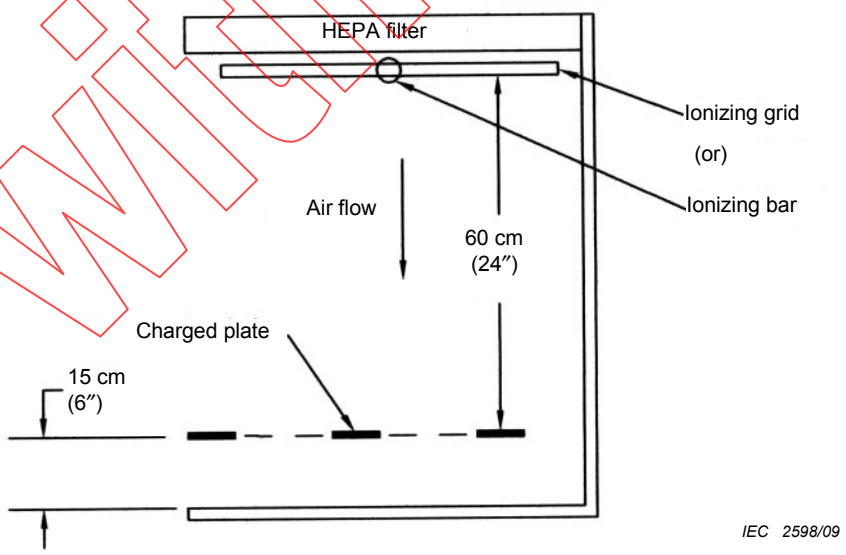

Figure 8 – Vertical laminar flow hood – Side view

Withdrawn

Documents
Document Sharing Hub
Full document details: IEC 61340-4-7 2010

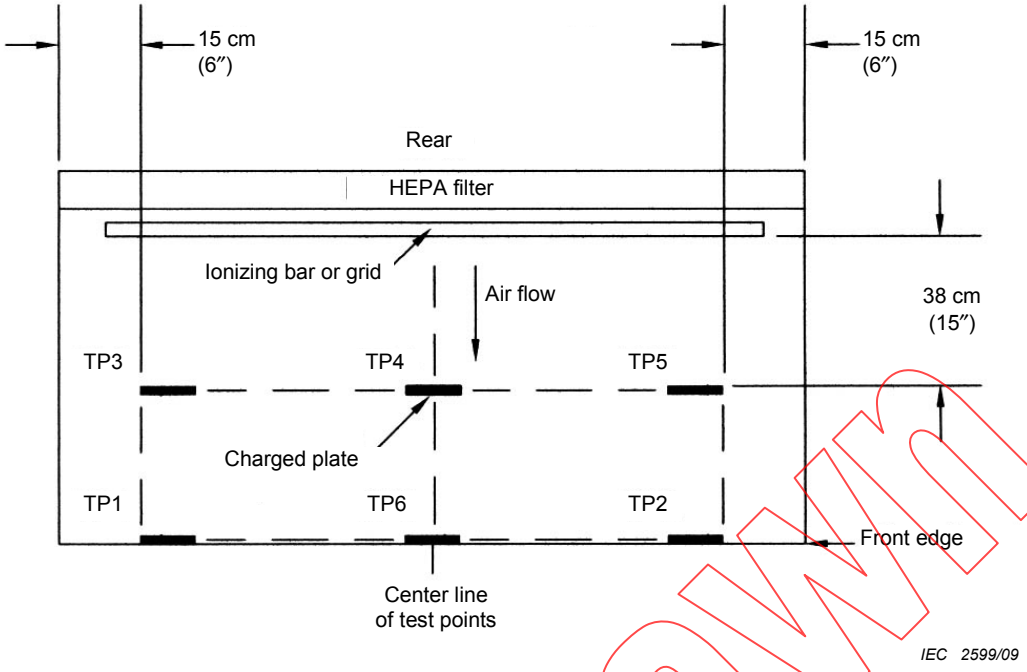

NOTE Six measurement locations required.

Figure 9 – Test locations for horizontal laminar flow hood – Top view

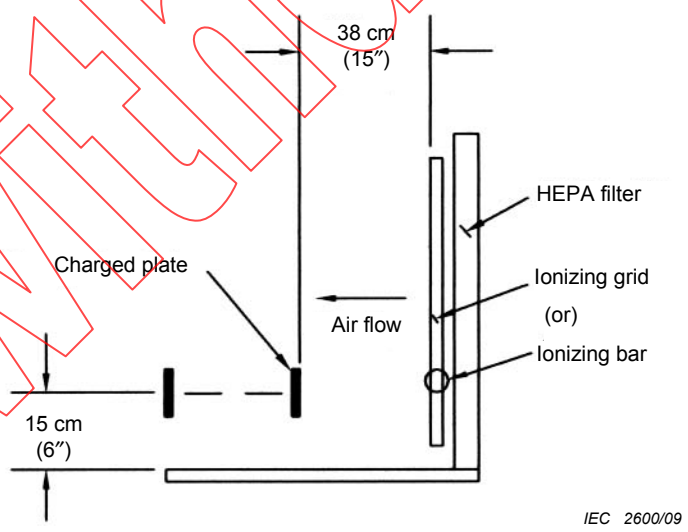

Figure 10 – Horizontal laminar flow hood – Side view

withdrawn

Documents
Document Sharing Hub
Full document details: IEC 61340-4-7 2010

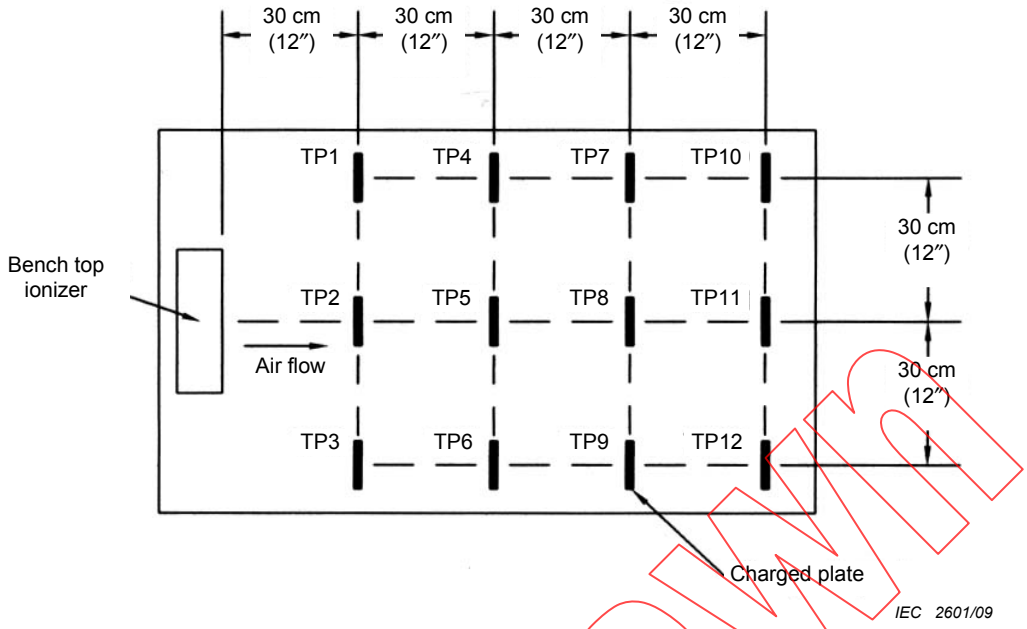

NOTE Twelve measurement locations required.

Figure 11 – Test locations for benchtop ionizer – Top view

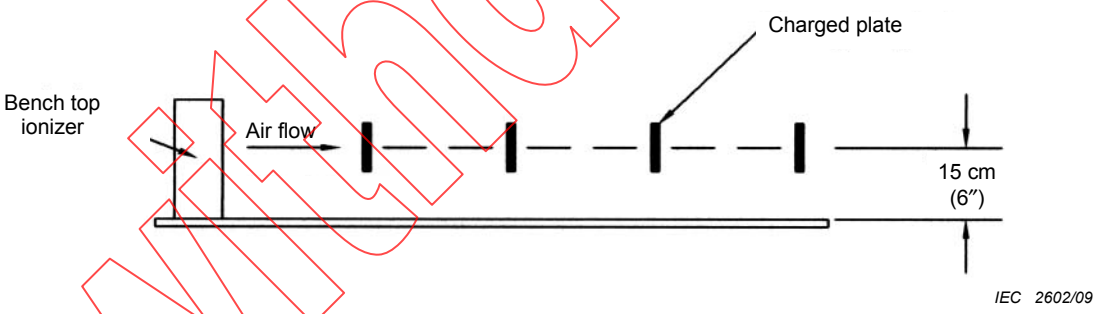

Figure 12 – Benchtop ionizer – Side view

Withdrawn

Documents
Document Sharing Hub
Full document details: IEC 61340-4-7 2010