IEC 61340-4-7

Edition 2.0 2017-01

INTERNATIONAL STANDARD

NORME INTERNATIONALE

Electrostatics –
Part 4-7: Standard test methods for specific applications – Ionization

Électrostatique –
Partie 4-7: Méthodes d'essai normalisées pour des applications spécifiques – Ionisation

IEC 61340-4-7:2017-01(en-fr)

Documents
Document Sharing Hub

Full document details: IEC 61340-4-7 2017

THIS PUBLICATION IS COPYRIGHT PROTECTED

Copyright © 2017 IEC, Geneva, Switzerland

All rights reserved. Unless otherwise specified, no part of this publication may be reproduced or utilized in any form or by any means, electronic or mechanical, including photocopying and microfilm, without permission in writing from either IEC or IEC's member National Committee in the country of the requester. If you have any questions about IEC copyright or have an enquiry about obtaining additional rights to this publication, please contact the address below or your local IEC member National Committee for further information.

Droits de reproduction réservés. Sauf indication contraire, aucune partie de cette publication ne peut être reproduite ni utilisée sous quelque forme que ce soit et par aucun procédé, électronique ou mécanique, y compris la photocopie et les microfilms, sans l'accord écrit de l'IEC ou du Comité national de l'IEC du pays du demandeur. Si vous avez des questions sur le copyright de l'IEC ou si vous désirez obtenir des droits supplémentaires sur cette publication, utilisez les coordonnées ci-après ou contactez le Comité national de l'IEC de votre pays de résidence.

IEC Central Office
3, rue de Varembé
CH-1211 Geneva 20
Switzerland

Tel.: +41 22 919 02 11
Fax: +41 22 919 03 00
info@iec.ch
www.iec.ch

About the IEC
The International Electrotechnical Commission (IEC) is the leading global organization that prepares and publishes International Standards for all electrical, electronic and related technologies.

About IEC publications
The technical content of IEC publications is kept under constant review by the IEC. Please make sure that you have the latest edition, a corrigenda or an amendment might have been published.

IEC Catalogue - webstore.iec.ch/catalogue
The stand-alone application for consulting the entire bibliographical information on IEC International Standards, Technical Specifications, Technical Reports and other documents. Available for PC, Mac OS, Android Tablets and iPad.

IEC publications search - www.iec.ch/searchpub
The advanced search enables to find IEC publications by a variety of criteria (reference number, text, technical committee,…). It also gives information on projects, replaced and withdrawn publications.

IEC Just Published - webstore.iec.ch/justpublished
Stay up to date on all new IEC publications. Just Published details all new publications released. Available online and also once a month by email.

Electropedia - www.electropedia.org
The world's leading online dictionary of electronic and electrical terms containing 20 000 terms and definitions in English and French, with equivalent terms in 16 additional languages. Also known as the International Electrotechnical Vocabulary (IEV) online.

IEC Glossary - std.iec.ch/glossary
65 000 electrotechnical terminology entries in English and French extracted from the Terms and Definitions clause of IEC publications issued since 2002. Some entries have been collected from earlier publications of IEC TC 37, 77, 86 and CISPR.

IEC Customer Service Centre - webstore.iec.ch/csc
If you wish to give us your feedback on this publication or need further assistance, please contact the Customer Service Centre: csc@iec.ch.

A propos de l'IEC
La Commission Electrotechnique Internationale (IEC) est la première organisation mondiale qui élabore et publie des Normes internationales pour tout ce qui a trait à l'électricité, à l'électronique et aux technologies apparentées.

A propos des publications IEC
Le contenu technique des publications IEC est constamment revu. Veuillez vous assurer que vous possédez l'édition la plus récente, un corrigendum ou amendement peut avoir été publié.

Catalogue IEC - webstore.iec.ch/catalogue
Application autonome pour consulter tous les renseignements bibliographiques sur les Normes internationales, Spécifications techniques, Rapports techniques et autres documents de l'IEC. Disponible pour PC, Mac OS, tablettes Android et iPad.

Recherche de publications IEC - www.iec.ch/searchpub

La recherche avancée permet de trouver des publications IEC en utilisant différents critères (numéro de référence, texte, comité d'études,…). Elle donne aussi des informations sur les projets et les publications remplacées ou retirées.

IEC Just Published - webstore.iec.ch/justpublished

Restez informé sur les nouvelles publications IEC. Just Published détaille les nouvelles publications parues. Disponible en ligne et aussi une fois par mois par email.

Electropedia - www.electropedia.org

Le premier dictionnaire en ligne de termes électroniques et électriques. Il contient 20 000 termes et définitions en anglais et en français, ainsi que les termes équivalents dans 16 langues additionnelles. Egalement appelé Vocabulaire Electrotechnique International (IEV) en ligne.

Glossaire IEC - std.iec.ch/glossary
65 000 entrées terminologiques électrotechniques, en anglais et en français, extraites des articles Termes et Définitions des publications IEC parues depuis 2002. Plus certaines entrées antérieures extraites des publications des CE 37, 77, 86 et CISPR de l'IEC.

Service Clients - webstore.iec.ch/csc

Si vous désirez nous donner des commentaires sur cette publication ou si vous avez des questions contactez-nous: csc@iec.ch.

Documents
Document Sharing Hub

Full document details: IEC 61340-4-7 2017

IEC 61340-4-7

Edition 2.0 2017-01

INTERNATIONAL STANDARD

NORME INTERNATIONALE

Electrostatics –
Part 4-7: Standard test methods for specific applications – Ionization

Électrostatique –
Partie 4-7: Méthodes d'essai normalisées pour des applications spécifiques – Ionisation

INTERNATIONAL
ELECTROTECHNICAL
COMMISSION

COMMISSION
ELECTROTECHNIQUE
INTERNATIONALE

ICS 17.200.99; 29.020

ISBN 978-2-8322-3775-5

Warning! Make sure that you obtained this publication from an authorized distributor.
Attention! Veuillez vous assurer que vous avez obtenu cette publication via un distributeur agréé.

® Registered trademark of the International Electrotechnical Commission
Marque déposée de la Commission Electrotechnique Internationale

Documents
Document Sharing Hub

Full document details: IEC 61340-4-7 2017

CONTENTS

FOREWORD 4
INTRODUCTION 6
1 Scope 7
2 Normative references 7
3 Terms and definitions 7
4 Test fixture and instrumentation 9
5 Specific requirements for equipment categories 11
5.1 Specific requirements for all ionization equipment 11
5.2 Room ionization 12
5.3 Laminar flow hood ionization 14
5.4 Work surface ionization 16
5.5 Compressed gas ionizers – Guns and nozzles 19
Annex A (informative) Theoretical background and additional information on the standard test method for the performance of ionizers 21
A.1 Introductory remarks 21
A.2 Air ions 21
A.3 Mobility and ion current 21
A.4 Neutralization current 21
A.5 Neutralization rate 22
A.6 Ion depletion and field suppression 22
A.7 Charged plate monitor and charge neutralization 22
A.8 Relationship between charged plate monitor decay time and actual object 23
A.9 Offset voltage 23
A.10 Preparation of test area 23
A.11 Ion transport in airflow 24
A.12 Obstruction of airflow around the charged plate monitor 24
A.13 Effect of “air blanket” 24
A.14 Sources of measurement error 25
A.14.1 Typical decay time variability 25
A.14.2 Plate isolation 25
A.14.3 Charging voltage 25
A.14.4 Materials near the plate 25
A.14.5 Other field-producing devices in test area 25
A.14.6 Effect of offset voltage on decay time 25
A.15 Importance of ionization equipment maintenance 26
Annex B (normative) Method of measuring the capacitance of an isolated conductive plate 27
B.1 Method 27
B.2 Equipment 27
B.3 Procedure 27
B.4 Example 27
B.5 Sources of error 28
B.5.1 Measuring equipment 28
B.5.2 Poor plate isolation 28
B.5.3 Objects in the environment 29
B.5.4 Stray capacitance 29
Annex C (informative) Safety considerations 30

AVA Documents
Document Sharing Hub
Full document details: IEC 61340-4-7 2017

C.1 General 30
C.2 Electrical 30
C.3 Ozone 30
C.4 Radioactive 30
C.5 X-ray 30
C.6 Installation 30
Bibliography 31

Figure 1 – Charged plate monitor components for non-contacting plate measurement 10
Figure 2 – Charged plate monitor components for contacting plate measurement 10
Figure 3 – Conductive plate detail for the non-contacting CPM 11
Figure 4 – Conductive plate detail for the voltage follower CPM 11
Figure 5 – Test locations for room ionization – AC grids and DC bar systems 13
Figure 6 – Test locations for room ionization – Single polarity emitter systems 13
Figure 7 – Test locations for room ionization – Dual DC line systems 14
Figure 8 – Test locations for room ionization – Pulsed DC emitter systems 14
Figure 9 – Test locations for vertical laminar flow hood – Top view 15
Figure 10 – Test locations for vertical laminar flow hood – Side view 15
Figure 11 – Test locations for horizontal laminar flow hood – Top view 16
Figure 12 – Test locations for horizontal laminar flow hood – Side view 16
Figure 13 – Test locations for benchtop ionizer – Top view 17
Figure 14 – Test locations for benchtop ionizer – Side view 18
Figure 15 – Test locations for overhead ionizer – Top view 18
Figure 16 – Test locations for overhead ionizer – Side view 19
Figure 17 – Test locations for compressed gas ionizer (gun or nozzle) – Side view 20

Table 1 – Test set-ups and test locations/points (TP) 12
Table B.1 – Example measurement data 28

Documents
Document Sharing Hub

Full document details: IEC 61340-4-7 2017

INTERNATIONAL ELECTROTECHNICAL COMMISSION

ELECTROSTATICS –

Part 4-7: Standard test methods for specific applications – Ionization

FOREWORD

1) The International Electrotechnical Commission (IEC) is a worldwide organization for standardization comprising all national electrotechnical committees (IEC National Committees). The object of IEC is to promote international co-operation on all questions concerning standardization in the electrical and electronic fields. To this end and in addition to other activities, IEC publishes International Standards, Technical Specifications, Technical Reports, Publicly Available Specifications (PAS) and Guides (hereafter referred to as "IEC Publication(s)"). Their preparation is entrusted to technical committees; any IEC National Committee interested in the subject dealt with may participate in this preparatory work. International, governmental and non-governmental organizations liaising with the IEC also participate in this preparation. IEC collaborates closely with the International Organization for Standardization (ISO) in accordance with conditions determined by agreement between the two organizations.
2) The formal decisions or agreements of IEC on technical matters express, as nearly as possible, an international consensus of opinion on the relevant subjects since each technical committee has representation from all interested IEC National Committees.
3) IEC Publications have the form of recommendations for international use and are accepted by IEC National Committees in that sense. While all reasonable efforts are made to ensure that the technical content of IEC Publications is accurate, IEC cannot be held responsible for the way in which they are used or for any misinterpretation by any end user.
4) In order to promote international uniformity, IEC National Committees undertake to apply IEC Publications transparently to the maximum extent possible in their national and regional publications. Any divergence between any IEC Publication and the corresponding national or regional publication shall be clearly indicated in the latter.
5) IEC itself does not provide any attestation of conformity. Independent certification bodies provide conformity assessment services and, in some areas, access to IEC marks of conformity. IEC is not responsible for any services carried out by independent certification bodies.
6) All users should ensure that they have the latest edition of this publication.
7) No liability shall attach to IEC or its directors, employees, servants or agents including individual experts and members of its technical committees and IEC National Committees for any personal injury, property damage or other damage of any nature whatsoever, whether direct or indirect, or for costs (including legal fees) and expenses arising out of the publication, use of, or reliance upon, this IEC Publication or any other IEC Publications.
8) Attention is drawn to the Normative references cited in this publication. Use of the referenced publications is indispensable for the correct application of this publication.
9) Attention is drawn to the possibility that some of the elements of this IEC Publication may be the subject of patent rights. IEC shall not be held responsible for identifying any or all such patent rights.

International Standard IEC 61340-4-7 has been prepared by IEC technical committee 101: Electrostatics.

This second edition cancels and replaces the first edition, published in 2010, and constitutes a technical revision.

This edition includes the following significant technical changes with respect to the previous edition:

– the use of contacting plate voltage measurements in addition to the previous non-contacting plate voltage measurements has been added. Charged plate monitors (CPMs) using this technology have been in use in the industry for many years.

Documents
Document Sharing Hub

Full document details: IEC 61340-4-7 2017

The text of this standard is also based on the following documents:

FDIS	Report on voting
101/521/FDIS	101/524/RVD

Full information on the voting for the approval of this standard can be found in the report on voting indicated in the above table.

This publication has been drafted in accordance with the ISO/IEC Directives, Part 2.

A list of all parts in the IEC 61340 series, published under the general title *Electrostatics*, can be found on the IEC website.

The committee has decided that the contents of this publication will remain unchanged until the stability date indicated on the IEC website under "http://webstore.iec.ch" in the data related to the specific publication. At this date, the publication will be

- reconfirmed,
- withdrawn,
- replaced by a revised edition, or
- amended.

Documents
Document Sharing Hub

Full document details: IEC 61340-4-7 2017

INTRODUCTION

Grounding is the primary method used to limit static charge when protecting electrostatic discharge sensitive items in the work environment. However, grounding methods are not effective in removing static charges from the surfaces of non-conductive (insulative) or isolated conductive materials. Air ionization techniques, by means of ionizer systems, can be utilized to reduce this charge.

The preferred way of evaluating the ability of an ionizer to neutralize a static charge is to directly measure the rate of charge decay. Charges to be neutralized may be located on insulators as well as on isolated conductors. It is difficult to charge an insulator reliably and repeatably. Charge neutralization is more easily evaluated by measuring the rate of decay of the voltage of an isolated conductive plate. The measurement of this decay should not interfere with or change the nature of the actual decay. Four practical methods of air ionization are addressed in this document:

a) radioactive emission;

b) high-voltage corona from a.c. electric fields;

c) high-voltage corona from d.c. electric fields;

d) soft X-ray emission.

This part of IEC 61340 provides test methods and procedures that can be used when evaluating ionization equipment. The objective of the test methods is to generate meaningful, reproducible data. The test methods are not meant to be a recommendation for any particular ionizer configuration. The wide variety of ionizers, and the environments within which they are used, will often require test methods different from those described in this document. Users of this document should be prepared to adapt the test methods as required to produce meaningful data in their own application of ionizers.

Similarly, the test conditions chosen in this document do not represent a recommendation for acceptable ionizer performance. There is a wide range of item sensitivities to static charge. There is also a wide range of environmental conditions affecting the operation of ionizers. Performance specifications should be agreed upon between the user and manufacturer of the ionizer in each application. Users of this document should be prepared to establish reasonable performance requirements for their own application of ionizers.

Annex B provides a method for measuring capacitance of the isolated conductive plate.

Documents
Document Sharing Hub

Full document details: IEC 61340-4-7 2017

ELECTROSTATICS –

Part 4-7: Standard test methods for specific applications – Ionization

1 Scope

This part of IEC 61340 provides test methods and procedures for evaluating and selecting air ionization equipment and systems (ionizers).

This document establishes measurement techniques, under specified conditions, to determine offset voltage (ion balance) and decay (charge neutralization) time for ionizers.

This document does not include measurements of electromagnetic interference (EMI), or the use of ionizers in connection with ordnance, flammables, explosive items or electrically initiated explosive devices.

As contained in this document, the test methods and test conditions can be used by manufacturers of ionizers to provide performance data describing their products. Users of ionizers are urged to modify the test methods and test conditions for their specific application in order to qualify ionizers for use, or to make periodic verifications of ionizer performance. The user will decide the extent of the data required for each application.

CAUTION: Procedures and equipment described in this document can expose personnel to hazardous electrical and non-electrical conditions. Users of this document are responsible for selecting equipment that complies with applicable laws, regulatory codes and both external and internal policy. Users are cautioned that this document cannot replace or supersede any requirements for personnel safety.

2 Normative references

There are no normative references in this document.

3 Terms and definitions

For the purposes of this document, the following terms and definitions apply.

ISO and IEC maintain terminological databases for use in standardization at the following addresses:

- IEC Electropedia: available at http://www.electropedia.org/
- ISO Online browsing platform: available at http://www.iso.org/obp

3.1
air conductivity
ability of air to conduct (pass) an electric current under the influence of an electric field

3.2
air ions
molecular clusters of about ten molecules (water, impurities, etc.) bound by polarization forces to a singly charged oxygen or nitrogen molecule

Documents
Document Sharing Hub

Full document details: IEC 61340-4-7 2017

3.3
charge decay
decrease and/or neutralization of a net electrostatic charge

3.4
charged plate monitor
CPM
instrument using a charged metal plate of a defined capacitance and geometry which is discharged in order to measure charge dissipation/neutralization properties of products or materials

Note 1 to entry: This note applies to the French language only.

3.5
compressed gas ionizer
ionization device that can be used to neutralize charged surfaces and/or remove surface particles with pressurized gas

Note 1 to entry: This type of ionizer may be used to ionize the gas within production equipment.

3.6
corona
production of positive or negative ions by a very localized high electric field

Note 1 to entry: The field is normally established by applying a high voltage to a conductor in the shape of a sharp point or wire.

3.7
decay rate
decrease of charge or voltage per unit time

3.8
decay time
time necessary for a voltage (due to an electrostatic charge) to decay from an initial value to some chosen final value

3.9
emitter
conducting sharp object, usually a needle or wire, which will cause a corona discharge when kept at a high potential

3.10
horizontal laminar flow
non-turbulent airflow in a horizontal direction

3.11
ionizer
device designed to generate positive and/or negative air ions

3.12
isolated conductor
non-grounded conductor

3.13
laminar flow hood ionization
device or systems that provide local area ionization coverage in vertical or horizontal laminar flow hoods or benches

Documents
Document Sharing Hub
Full document details: IEC 61340-4-7 2017

3.14
non-contacting voltage measurement
measurement technique using an electrostatic fieldmeter or voltmeter to monitor the voltage induced on an isolated conductive plate where there is no direct connection from the measurement sensor to the isolated conductive plate

3.15
offset voltage
ion balance
observed voltage on the isolated conductive plate of a charged plate monitor (CPM) that has been placed in an ionized environment

3.16
peak offset voltage
for pulsed ionizers, maximum value of the offset voltage for each polarity, as the ionizer cycles between positive and negative ion outputs

3.17
room ionization
ionization systems that provide large area coverage with air ions

3.18
work surface ionization
ionization devices or systems used to control static charges at a work surface

Note 1 to entry: This type includes benchtop ionizers, overhead work surface ionizers and laminar flow hood ionizers.

3.19
vertical laminar flow
non-turbulent airflow in a vertical direction

3.20
contacting voltage measurement
measurement technique using high input impedance circuitry used to monitor the voltage induced on an isolated conductive plate where there is a direct connection from the circuitry to the conductive plate

4 Test fixture and instrumentation

4.1 The instrument described in this document to make performance measurements on air ionization equipment is the charged plate monitor (CPM); refer to Figure 1 and Figure 2. The conductive plate shall be (15,0 ± 0,1) cm × (15,0 ± 0,1) cm and the total capacitance of the test circuit, with plate, while the instrument is in its normal operating mode, shall be 20 pF ± 2 pF (refer to Annex B). See Figure 3 and Figure 4. The instrument described in this document may also be used for compliance verification of air ionizers.

4.2 For the isolated conductive plate design shown in Figure 3, there shall be no objects, grounded or otherwise, closer than dimension "A" of the conductive plate, except the supporting insulators or plate voltage contacts, as shown in Figure 3 (refer to Annex B). For the conductive plate assembly shown in Figure 4, there shall be no objects, grounded or otherwise, within 2,54 cm of the plate assembly in any direction, other than a support structure (e.g. a tripod) located below the ground plate of the assembly.

4.3 The conductive plate, when charged to the desired test voltage, shall not decay more than 10 % of the test voltage within 5 min, in the absence of ionization.

Documents
Document Sharing Hub
Full document details: IEC 61340-4-7 2017

4.4 The voltage on the conductive plate shall be monitored in such a way that the system conforms to 4.1, 4.2 and 4.3. The response time of the monitoring device shall be sufficient to accurately measure changing plate voltages.

For safety reasons (see Clause C.1), the voltage source used to charge the plate should be current limited.

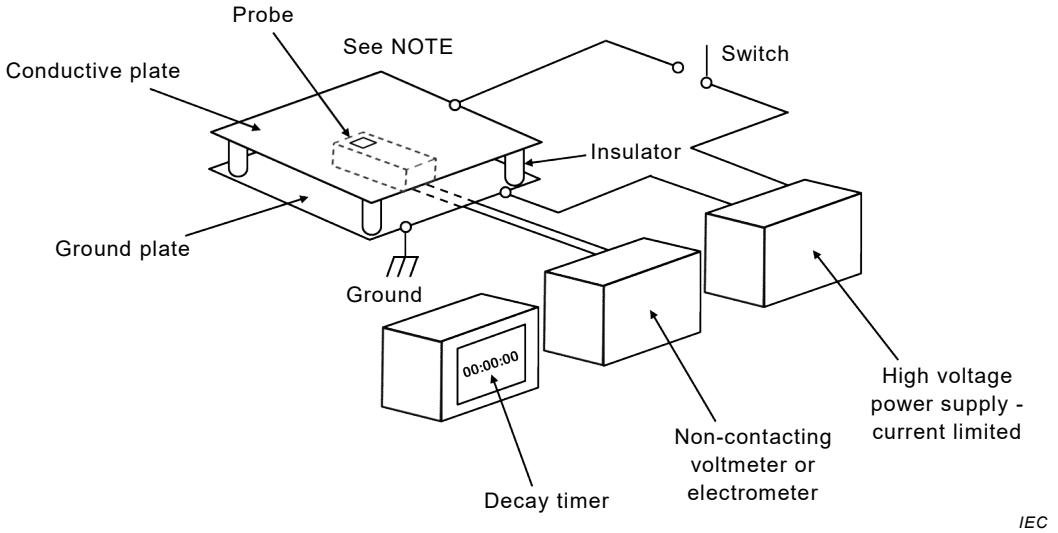

NOTE See Figure 3.

Figure 1 – Charged plate monitor components for non-contacting plate measurement

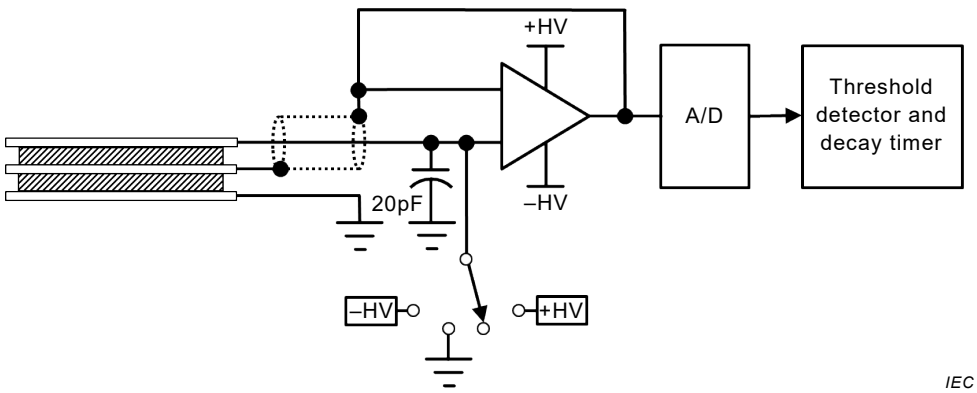

Figure 2 – Charged plate monitor components for contacting plate measurement

Documents
Document Sharing Hub
Full document details: IEC 61340-4-7 2017

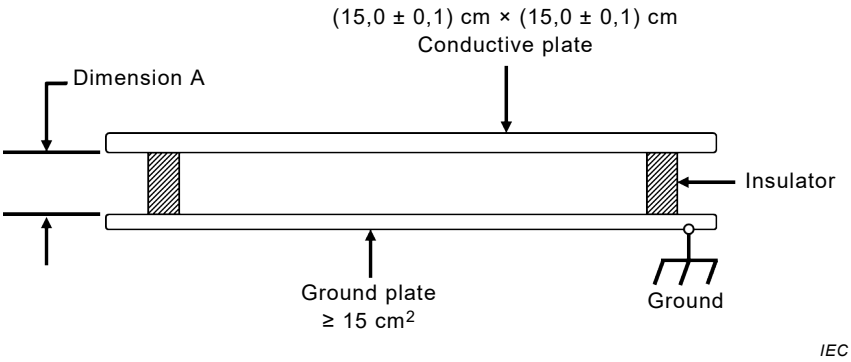

Figure 3 – Conductive plate detail for the non-contacting CPM

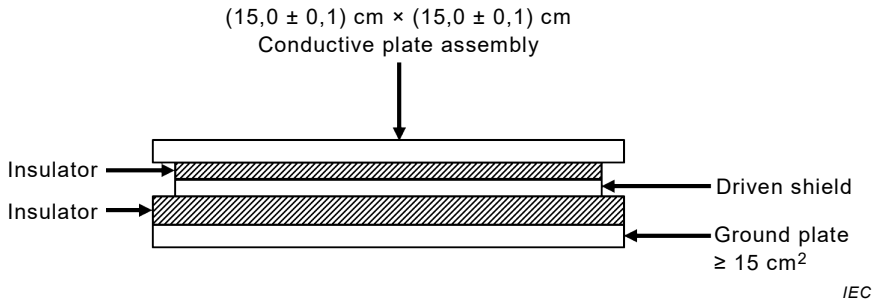

Figure 4 – Conductive plate detail for the voltage follower CPM

5 Specific requirements for equipment categories

5.1 Specific requirements for all ionization equipment

For the types of ionization equipment listed in 5.2, 5.3, 5.4 and 5.5, the following specific requirements apply:

a) Decay time test – The conductive plate of the test fixture shall be charged to an initial test voltage and allowed to decay to 10 % of the initial test voltage. The time required shall be monitored and recorded for both polarities of initial charge. This time is referred to as the decay time (refer to 4.1 and Figure 1).

b) Offset voltage test – The conductive plate shall be momentarily grounded to remove any residual charges and to verify zero of the voltage monitoring device. The plate is then monitored within the ionized environment, per the procedure described for each equipment category. The resulting observed voltage is referred to as the offset voltage.

c) Locations – The decay time and offset voltage shall be measured for each test location/point (TP) described in the test location figures (see Table 1).

d) Same conditions – Decay time and offset voltage shall be measured under the same conditions without any equipment adjustments. If ionizers from different categories are to be compared, the same test voltages shall be used for all tests.

e) Peak offset voltage – In the case of pulsed ionizers, offset voltage shall be measured and reported in peak values using the test equipment described in 4.1.

f) Other parameters – Application specific parameters such as humidity, temperature, air speed, etc., shall be recorded.

Documents
Document Sharing Hub
Full document details: IEC 61340-4-7 2017

Table 1 – Test set-ups and test locations/points (TP)

Equipment category	Figure references	Number of test locations	Offset voltage measurement time interval	Charged plate initial voltage (both polarities) V
Room ionization				
Grids, AC	5	2	(1 to 5) min	1 000
Bars, pulsed and DC	5	2	(1 to 5) min	1 000
Single polarity emitter	6	3	(1 to 5) min	1 000
Dual DC line	7	3	(1 to 5) min	1 000
Pulsed DC emitter	8	2	(1 to 5) min	1 000
Laminar flow hood				
Vertical	9 and 10	8	(1 to 5) min	1 000
Horizontal	11 and 12	6	(1 to 5) min	1 000
Work surface ionization				
Benchtop	13 and 14	12	(1 to 5) min	1 000
Overhead	15 and 16	12	(1 to 5) min	1 000
Compressed gas ionization				
Guns and nozzles	17	1	10 s to 1 min	1 000

5.2 Room ionization

5.2.1 The area around the charged plate monitor should be cleared for a horizontal distance of 1,5 m in all directions. The ionization system should be operated for a minimum of 30 min to stabilize conditions in the test area.

5.2.2 To avoid affecting the test, the test technician should be grounded and stand outside the 1,5 m cleared area.

5.2.3 Decay time from a 1 000 V initial voltage to a 100 V final voltage shall be measured for both positive (+) and negative (-) polarities.

5.2.4 The air speed at the test location shall be recorded.

5.2.5 Measurements should be taken with the charged plate monitor at a distance of 1,5 m from the ionizer under test. Since installed ionizer heights can vary, a consistent measurement height should be selected for the evaluation of different systems. This height and the ionizer mounting height shall be recorded in the test results.

5.2.6 The minimum number of test locations is determined by the type of system (see Table 1 and refer to Figures 5 through 8.)

5.2.7 Decay time as described in 5.1, point a), shall be measured at each test location.

Offset voltage as described in 5.1, points b) and e) shall be determined at each test location. Offset voltage shall be measured after a period of at least 1 min to allow the reading to stabilize (5 min maximum).

Documents
Document Sharing Hub
Full document details: IEC 61340-4-7 2017

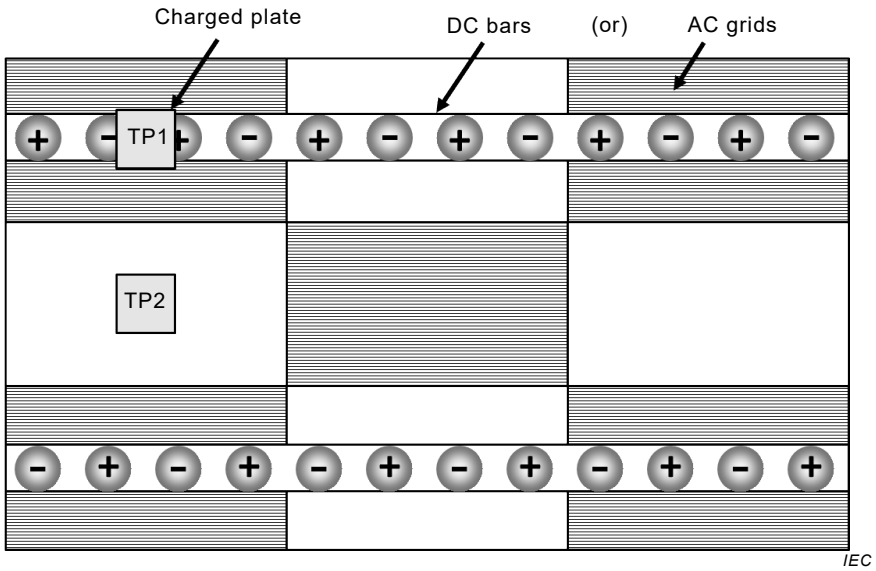

NOTE 1 Example for AC grids (shaded areas, less than 100 % coverage) and pulsed or steady-state DC bars.

NOTE 2 TP1 is directly under grid or bar while TP2 is centred between grids or bars.

Figure 5 – Test locations for room ionization – AC grids and DC bar systems

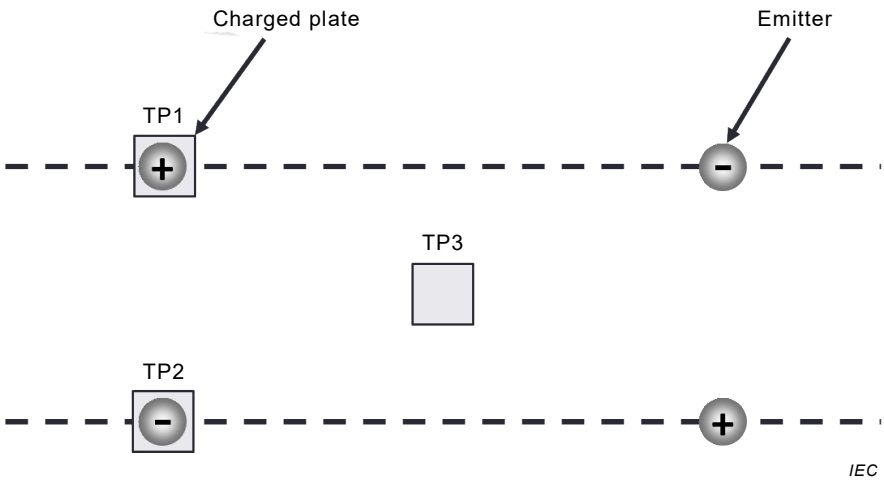

Three measurement locations required.

Figure 6 – Test locations for room ionization – Single polarity emitter systems

Documents
Document Sharing Hub
Full document details: IEC 61340-4-7 2017

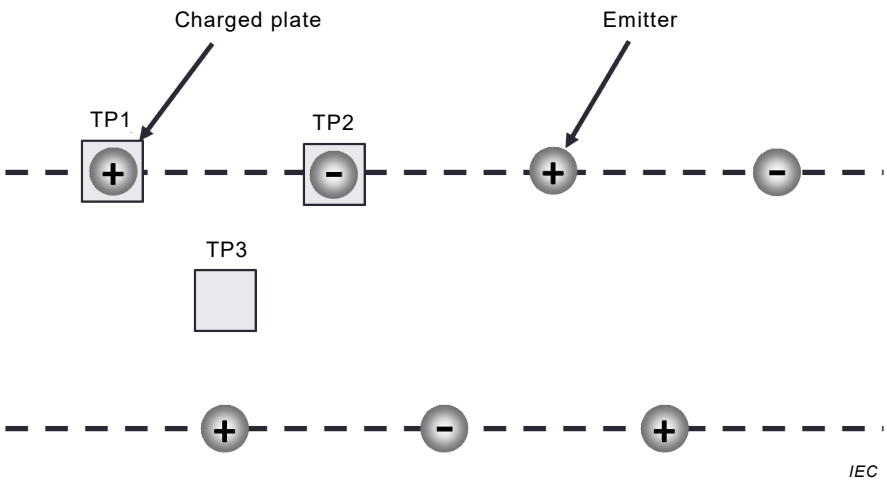

Three measurement locations required.

Figure 7 – Test locations for room ionization – Dual DC line systems

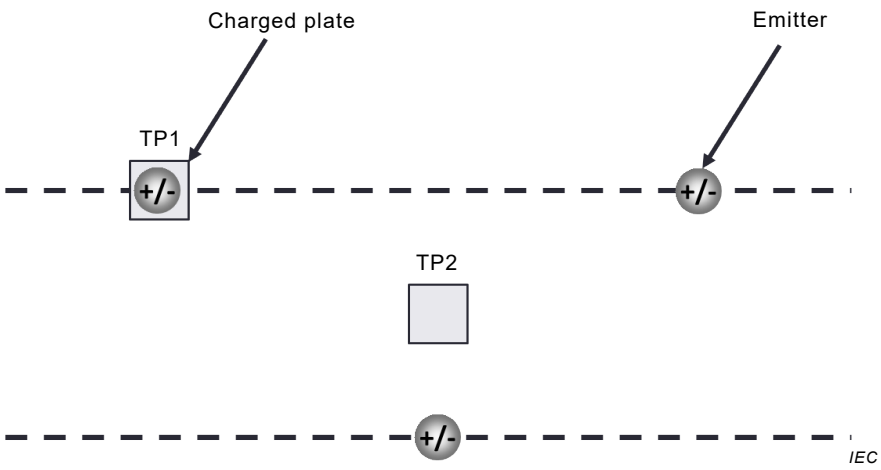

Two measurement locations required.

Figure 8 – Test locations for room ionization – Pulsed DC emitter systems

5.3 Laminar flow hood ionization

5.3.1 The test should be performed on a surface that does not contain obstructions to airflow. Unless otherwise specified, the test surface should be static dissipative or conductive and properly grounded.

5.3.2 To avoid affecting the test, the test technician should be properly grounded.

5.3.3 Decay time from a 1 000 V initial voltage to a 100 V final voltage shall be measured for both positive (+) and negative (-) polarities.

5.3.4 The air speed at test location TP4, as shown in Figures 9 and 11, should be recorded.

5.3.5 For a vertical laminar flow hood, the test set-up is shown in Figures 9 and 10. Data shall be taken at test positions TP1 through TP8 as shown in Figure 9.

Documents
Document Sharing Hub
Full document details: IEC 61340-4-7 2017

5.3.6 For a horizontal laminar flow hood, the test set-up is shown in Figures 9 and 10. Data shall be taken at test positions TP1 through TP6 as shown in Figure 11.

5.3.7 Decay time as described in 5.1, point a), shall be measured at each test location.

5.3.8 Offset voltage as described in 5.1, points b) and e) shall be determined at each test location. Offset voltage shall be measured after a period of at least 1 min, or as necessary to allow the reading to stabilize (5 min maximum).

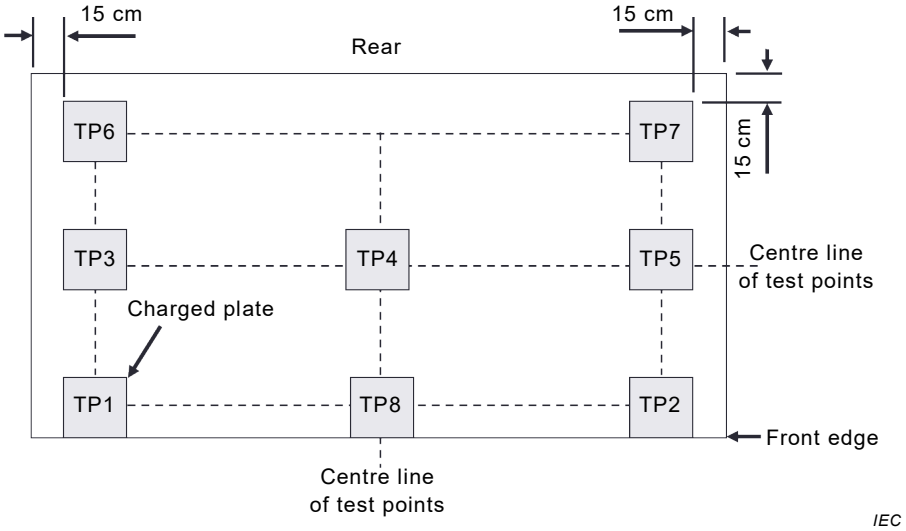

Eight measurement locations required, all dimensions nominal.

Figure 9 – Test locations for vertical laminar flow hood – Top view

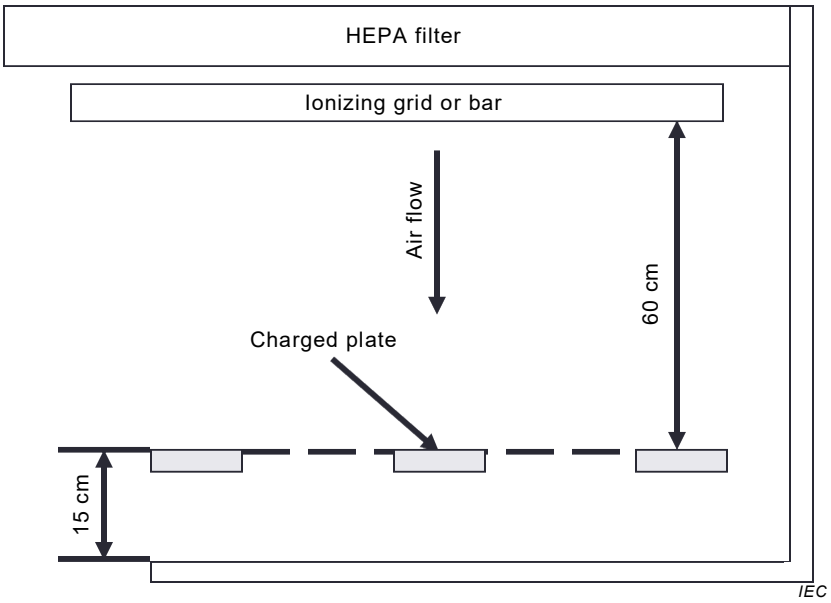

All dimensions nominal.

Figure 10 – Test locations for vertical laminar flow hood – Side view

Documents
Document Sharing Hub
Full document details: IEC 61340-4-7 2017

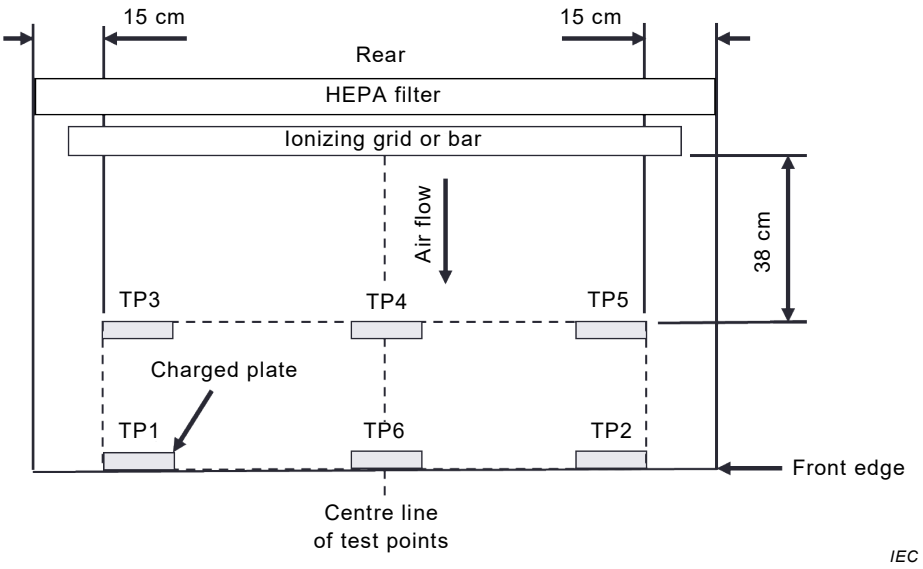

Six measurement locations required, all dimensions nominal.

Figure 11 – Test locations for horizontal laminar flow hood – Top view

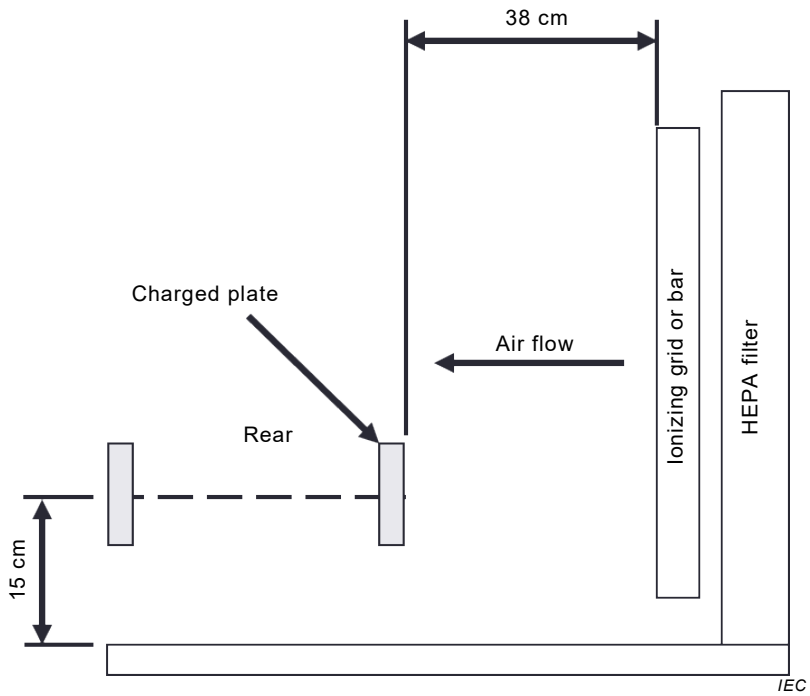

All dimensions nominal.

Figure 12 – Test locations for horizontal laminar flow hood – Side view

5.4 Work surface ionization

5.4.1 The test should be performed on a surface that does not contain obstructions to airflow. Unless otherwise specified the test surface should be static dissipative or conductive and properly grounded.

5.4.2 To avoid affecting the test, the test technician should be properly grounded.

Documents
Document Sharing Hub
Full document details: IEC 61340-4-7 2017

5.4.3 Decay time from a 1 000 V initial voltage to a 100 V final voltage shall be measured for both positive (+) and negative (-) polarities.

5.4.4 The unit shall be measured with the heater on and off, if so equipped. The unit shall be tested with any filters in place if so equipped. Measurements shall be made at both minimum and maximum airflows for units with variable airflow. The air speed shall be measured and included in the test results. End users should test ionizers with the same configuration of operating heaters and filters that they intend to use.

5.4.5 For benchtop units, the ionizer shall be placed as shown in Figures 13 and 14. Airflow shall be directed at test location TP2 and measured at test locations TP2 and TP5. The charged plate monitor shall face the ionizer. Measurements with the charged plate monitor shall be made at test locations TP1 through TP12 as shown in Figure 13.

5.4.6 For overhead units, the ionizer shall be placed as shown in Figures 15 and 16. Airflow shall be measured at test locations TP5 and TP8. Measurements with the charged plate monitor shall be made at test locations TP1 through TP12 as shown in Figure 15.

5.4.7 Decay time as described in 5.1, point a), shall be measured at each test location.

5.4.8 Offset voltage as described in 5.1, points b) and e) shall be determined at each test location. Offset voltage shall be measured after a period of at least 1 min, or as necessary to allow the reading to stabilize (5 min maximum).

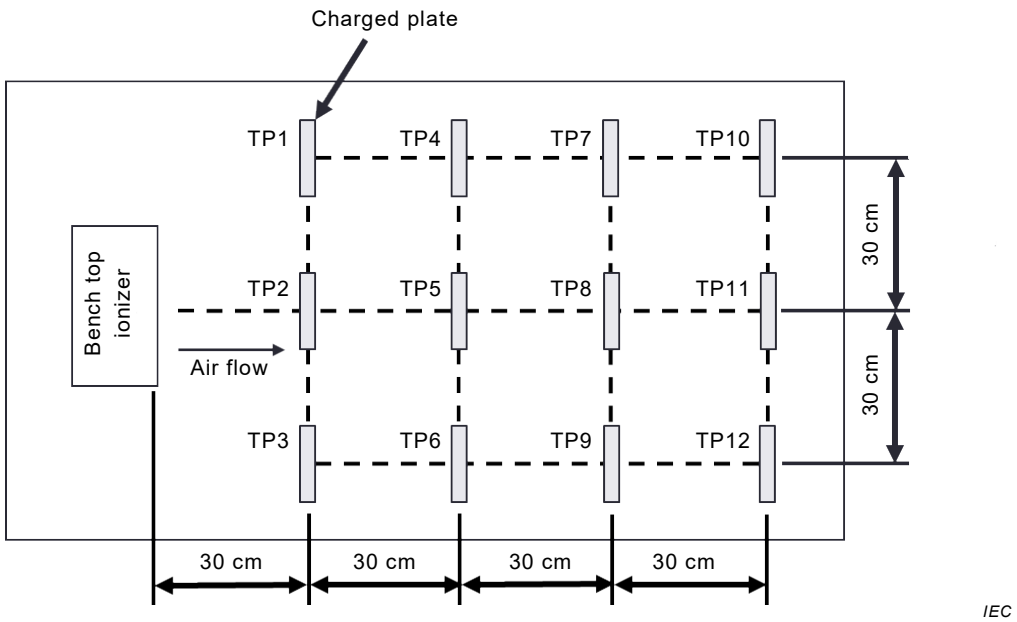

Twelve measurement locations required, all dimensions nominal.

Figure 13 – Test locations for benchtop ionizer – Top view

Documents
Document Sharing Hub
Full document details: IEC 61340-4-7 2017

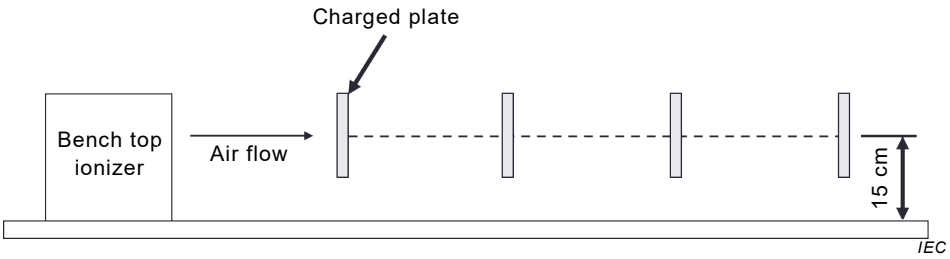

All dimensions nominal.

Figure 14 – Test locations for benchtop ionizer – Side view

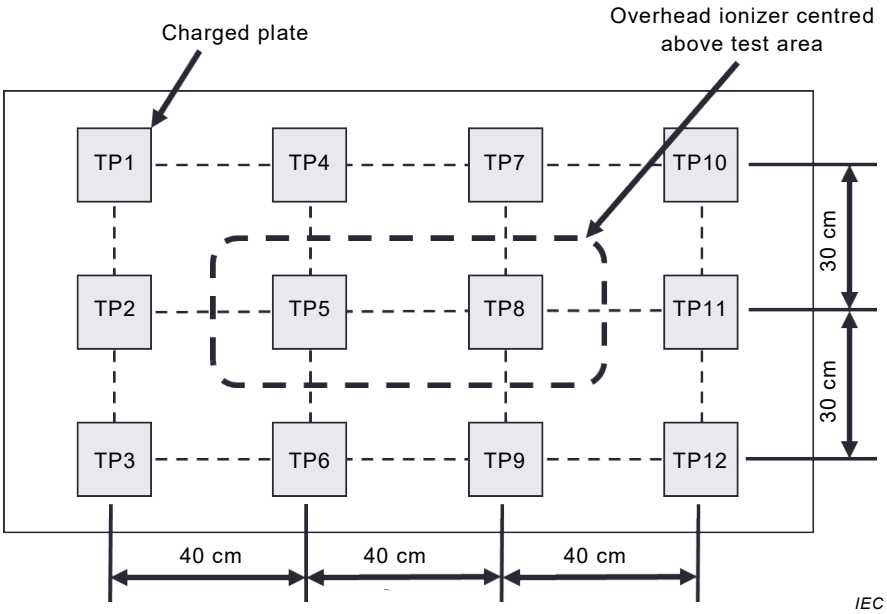

Twelve measurement locations required, all dimensions nominal.

Figure 15 – Test locations for overhead ionizer – Top view

Documents
Document Sharing Hub
Full document details: IEC 61340-4-7 2017