IEC 61347-1

Edition 3.0 2015-02
REDLINE VERSION

INTERNATIONAL STANDARD

colour inside

Lamp controlgear –
Part 1: General and safety requirements

IEC 61347-1:2015-02 RLV(en)

Documents
Document Sharing Hub

Full document details: IEC 61347-1 2015 RLV

THIS PUBLICATION IS COPYRIGHT PROTECTED

Copyright © 2015 IEC, Geneva, Switzerland

All rights reserved. Unless otherwise specified, no part of this publication may be reproduced or utilized in any form or by any means, electronic or mechanical, including photocopying and microfilm, without permission in writing from either IEC or IEC's member National Committee in the country of the requester. If you have any questions about IEC copyright or have an enquiry about obtaining additional rights to this publication, please contact the address below or your local IEC member National Committee for further information.

IEC Central Office
3, rue de Varembé
CH-1211 Geneva 20
Switzerland

Tel.: +41 22 919 02 11
Fax: +41 22 919 03 00
info@iec.ch
www.iec.ch

About the IEC
The International Electrotechnical Commission (IEC) is the leading global organization that prepares and publishes International Standards for all electrical, electronic and related technologies.

About IEC publications
The technical content of IEC publications is kept under constant review by the IEC. Please make sure that you have the latest edition, a corrigenda or an amendment might have been published.

IEC Catalogue - webstore.iec.ch/catalogue
The stand-alone application for consulting the entire bibliographical information on IEC International Standards, Technical Specifications, Technical Reports and other documents. Available for PC, Mac OS, Android Tablets and iPad.

IEC publications search - www.iec.ch/searchpub
The advanced search enables to find IEC publications by a variety of criteria (reference number, text, technical committee,…). It also gives information on projects, replaced and withdrawn publications.

IEC Just Published - webstore.iec.ch/justpublished
Stay up to date on all new IEC publications. Just Published details all new publications released. Available online and also once a month by email.

Electropedia - www.electropedia.org
The world's leading online dictionary of electronic and electrical terms containing more than 30 000 terms and definitions in English and French, with equivalent terms in 15 additional languages. Also known as the International Electrotechnical Vocabulary (IEV) online.

IEC Glossary - std.iec.ch/glossary
More than 60 000 electrotechnical terminology entries in English and French extracted from the Terms and Definitions clause of IEC publications issued since 2002. Some entries have been collected from earlier publications of IEC TC 37, 77, 86 and CISPR.

IEC Customer Service Centre - webstore.iec.ch/csc
If you wish to give us your feedback on this publication or need further assistance, please contact the Customer Service Centre: csc@iec.ch.

AVA Documents
Document Sharing Hub

Full document details: IEC 61347-1 2015 RLV

IEC 61347-1

Edition 3.0 2015-02
REDLINE VERSION

INTERNATIONAL STANDARD

colour inside

Lamp controlgear –
Part 1: General and safety requirements

INTERNATIONAL
ELECTROTECHNICAL
COMMISSION

ICS 29.140.99

ISBN 978-2-8322-2289-8

Warning! Make sure that you obtained this publication from an authorized distributor.

® Registered trademark of the International Electrotechnical Commission

Documents
Document Sharing Hub

Full document details: IEC 61347-1 2015 RLV

CONTENTS

FOREWORD 9
INTRODUCTION 12
1 Scope 13
2 Normative references 13
3 Terms and definitions 15
4 General requirements 23
5 General notes on tests 24
6 Classification 25
7 Marking 25
7.1 Items to be marked 25
7.2 Durability and legibility of marking 27
8 Terminals 28
9 ~~Provisions for protective earthing~~ Earthing 28
9.1 Provisions for protective earthing (Symbol: IEC 60417-5019 (2006-08)) 28
9.2 Provisions for functional earthing (Symbol: IEC 60417-5018 (2011-07)) 28
9.3 Lamp controlgear with conductors for protective earthing by tracks on printed circuit boards 28
9.4 Earthing of built-in lamp controlgear 29
9.5 Earthing via independent controlgear 29
9.5.1 Earth connection to other equipment 29
9.5.2 Earthing of the lamp compartments powered via the independent lamp controlgear 29
10 Protection against accidental contact with live parts 30
11 Moisture resistance and insulation 31
12 Electric strength 32
13 Thermal endurance test for windings of ballasts 33
14 Fault conditions 36
15 Construction 41
15.1 Wood, cotton, silk, paper and similar fibrous material 41
15.2 Printed circuits 41
15.3 Plugs and socket-outlets used in SELV or ELV circuits 41
15.4 Insulation between circuits and accessible parts 41
15.4.1 General 41
15.4.2 SELV circuits 42
15.4.3 FELV circuits 42
15.4.4 Other circuits 43
15.4.5 Insulation between circuits and accessible conductive parts 43
16 Creepage distances and clearances 45
16.1 General 45
16.2 Creepage distances 49
16.2.1 General 49
16.2.2 Minimum creepage distances for working voltages 50
16.2.3 Creepage distances for working voltages with frequencies above 30 kHz 50
16.2.4 Compliance with the required creepage distances 51

AVA Documents
Document Sharing Hub
Full document details: IEC 61347-1 2015 RLV

16.3 Clearances 52
16.3.1 General 52
16.3.2 Clearances for working voltages 53
16.3.3 Clearances for ignition voltages and working voltages with higher frequencies 54
16.3.4 Compliance with the required clearances 56
17 Screws, current-carrying parts and connections 57
18 Resistance to heat, fire and tracking 57
19 Resistance to corrosion 58
20 No-load output voltage 58
Annex A (normative) Test to establish whether a conductive part is a live part which may cause an electric shock 59
A.1 General test requirements 59
A.2 Limits for measured voltages 59
A.3 Limits for touch current 60
Annex B (normative) Particular requirements for thermally protected lamp controlgear 61
B.1 Introductory remark 61
B.2 General 61
B.3 Terms and definitions 61
B.4 General requirements for thermally protected lamp controlgear 62
B.5 General notes on tests 62
B.6 Classification 62
B.6.1 General 62
B.6.2 According to the class of protection 62
B.6.3 According to the type of protection 63
B.7 Marking 63
B.8 Thermal endurance of windings 63
B.9 Lamp controlgear heating 63
B.9.1 Preselection test 63
B.9.2 "Class P" thermally protected lamp controlgear 64
B.9.3 Temperature declared thermally protected lamp controlgear as specified in IEC 61347-2-8, with a rated maximum case temperature of 130 °C or lower 65
B.9.4 Temperature declared thermally protected lamp controlgear as specified in IEC 61347-2-8 with a rated maximum case temperature exceeding 130 °C 66
B.9.5 Temperature declared thermally protected lamp controlgear as specified in IEC 61347-2-9 67
Annex C (normative) Particular requirements for electronic lamp controlgear with means of protection against overheating 70
C.1 General 70
C.2 Terms and definitions 70
C.3 General requirements for electronic lamp controlgear with means of protection against overheating 70
C.4 General notes on tests 71
C.5 Classification 71
C.6 Marking 71
C.7 Limitation of heating 71
C.7.1 Pre-selection test 71

AVA Documents
Document Sharing Hub
Full document details: IEC 61347-1 2015 RLV

C.7.2 Functioning of the protection means 71
Annex D (normative) Requirements for carrying out the heating tests of thermally protected lamp controlgear 73
D.1 Test enclosure 73
D.2 Heating of enclosure 73
D.3 Lamp controlgear operating conditions 73
D.4 Lamp controlgear position in the enclosure 73
D.5 Temperature measurements 74
Annex E (normative) Use of constant *S* other than 4 500 in t_W tests 76
E.1 General 76
E.2 Procedure A 76
E.3 Procedure B 76
Annex F (normative) Draught-proof enclosure 79
Annex G (normative) Explanation of the derivation of the values of pulse voltages 80
G.1 Pulse voltage rise time *T* 80
G.2 Long-duration pulse voltages 80
G.3 Short-duration pulse voltages 80
G.4 Measurement of short-duration pulse energy 80
Annex H (normative) Tests 86
H.1 Ambient temperature and test room 86
H.2 Supply voltage and frequency 86
H.2.1 Test voltage and frequency 86
H.2.2 Stability of supply and frequency 86
H.2.3 Supply voltage waveform for reference ballast only 86
H.3 Electrical characteristics of lamps 87
H.4 Magnetic effects 87
H.5 Mounting and connection of reference lamps 87
H.6 Reference lamp stability 87
H.7 Instrument characteristics 87
H.7.1 Potential circuits 87
H.7.2 Current circuits 87
H.7.3 RMS measurements 88
H.8 Invertor power sources 88
H.9 Reference ballast 88
H.10 Reference lamps 88
H.11 Test conditions 88
H.11.1 Resistance measurement delays 88
H.11.2 Electrical resistance of contacts and leads 88
H.12 Lamp controlgear heating 88
H.12.1 Built-in lamp controlgear 88
H.12.2 Independent lamp controlgear 89
H.12.3 Integral lamp controlgear 89
H.12.4 Test conditions 90
Annex I (normative) Additional requirements for built-in magnetic ballasts with double or reinforced insulation 91
I.1 General 91
I.2 Terms and definitions 91
I.3 General requirements 91
I.4 General notes on tests 92

Documents
Document Sharing Hub
Full document details: IEC 61347-1 2015 RLV

I.5 Classification 92
I.6 Marking....92
I.7 Protection against accidental contact with live parts 92
I.8 Terminals....92
I.9 Provision for earthing 92
I.10 Moisture resistance and insulation 92
I.11 High-voltage impulse test 92
I.12 Thermal endurance test for windings of ballasts 93
I.13 Ballast heating 93
I.14 Screws, current-carrying parts and connections 93
I.15 Creepage distances and clearances 93
I.16 Resistance to heat and fire 93
I.17 Resistance to corrosion 93
Annex J (normative) Schedule of more onerous requirements 94
Annex K (informative) Conformity testing during manufacture 95
K.1 General....95
K.2 Testing 95
K.3 Additional dielectric strength tests for controlgear with protection against pollution by the use of coating or potting material....97
Annex L (normative) Particular additional requirements for controlgears providing SELV....98
L.1 General....98
L.2 Terms and definitions 98
L.3 Classification 99
L.4 Marking....99
L.5 Protection against electric shock 100
L.6 Heating 100
L.7 Short-circuit and overload protection 101
L.8 Insulation resistance and electric strength 102
L.8.1 General 102
L.8.2 Insulation resistance 102
L.8.3 Electric strength....102
L.9 Construction 103
L.10 Components....103
L.11 Creepage distances, clearances and distances through insulation....104
Annex M (informative) Dielectric strength test voltages for controlgear intended for the use in impulse withstand Category III 105
Annex N (normative) Requirements for insulation materials used for double or reinforced insulation 106
N.1 General....106
N.2 Reference document 106
N.3 Terms and definitions 106
N.4 General requirements....106
N.4.1 Material requirements 106
N.4.2 Solid insulation 106
N.4.3 Thin sheet insulation 106
Annex O (normative) Additional requirements for built-in electronic controlgear with double or reinforced insulation 110
O.1 General....110

AVA Documents
Document Sharing Hub
Full document details: IEC 61347-1 2015 RLV

O.2 Terms and definitions ... 110
O.3 General requirements ... 110
O.4 General notes on tests ... 110
O.5 Classification ... 111
O.6 Marking ... 111
O.7 Protection against accidental contact with live parts ... 111
O.8 Terminals ... 111
O.9 Provision for earthing ... 111
O.10 Moisture resistance and insulation ... 111
O.11 Electric strength ... 111
O.12 Thermal endurance of windings ... 111
O.13 Fault conditions ... 111
O.14 Construction ... 112
O.15 Creepage distances and clearances ... 112
O.16 Screws, current-carrying parts and connections ... 112
O.17 Resistance to heat and fire ... 112
O.18 Resistance to corrosion ... 112
Annex P (normative) Creepage distances and clearances and distance through isolation (DTI) for lamp controlgear which are protected against pollution by the use of coating or potting ... 113
P.1 General ... 113
P.2 Creepage distances ... 113
P.2.1 General ... 113
P.2.2 Minimum creepage distances for working voltages and rated voltage with frequencies up to 30 kHz ... 113
P.2.3 Creepage distances for working voltages with frequencies above 30 kHz ... 113
P.2.4 Compliance with the required creepage distances ... 114
P.3 Distance through isolation ... 116
P.3.1 General ... 116
P.3.2 Compliance tests ... 116
P.3.3 Preconditioning of the lamp controlgear ... 116
P.3.4 Electrical tests after conditioning ... 117
Annex Q (informative) Example for U_p calculation ... 119
Annex R (informative) Concept of creepage distances and clearances ... 120
R.1 Basic concept considerations ... 120
R.1.1 Creepage distances ... 120
R.1.2 Clearances ... 120
R.2 Why setting up tables? ... 121
Annex S (informative) Examples of controlgear insulation coordination ... 122
Annex T (informative) Creepage distances and clearances for controlgear with a higher degree of availability (impulse withstand category III) ... 123
T.1 General ... 123
T.2 Clearances for working voltages of lamp controlgear not protected against pollution by coating or potting materials ... 123
T.3 Clearances for working voltages of lamp controlgear protected against pollution by coating or potting ... 124
T.4 Distances through insulation – Particular additional requirements for controlgear providing SELV ... 124
Bibliography ... 126

Documents
Document Sharing Hub
Full document details: IEC 61347-1 2015 RLV

Figure 1 – Relation between winding temperature and endurance test duration 34
~~Figure 2 – Creepage distances between conductors on printed boards not conductively connected to the supply mains .....~~
Figure 2 – Test circuit for controlgear 40
Figure 3 – Example of a controlgear insulation related to Table 6.....44
Figure 4 – Application of Table 7 and Table 8 49
Figure 5 – Application of Table 9, Table 10 and Table 11 52
Figure 6 – Application of Table 10 and Table 11 53
Figure B.1 – Test circuit for thermally protected lamp controlgear 67
Figure D.1 – Example of heating enclosure for thermally protected ballasts.....75
Figure E.1 – Assessment of claimed value of *S* 78
Figure G.1 – Circuit for measuring short-duration pulse energy 83
Figure G.2 – Suitable circuit for producing and applying long-duration pulses.....85
Figure H.1 – Test arrangement for heating test.....90
Figure N.1 –Test arrangement for checking mechanical withstanding of insulating materials in thin sheet layers.....109
Figure Q.1 – Example for the calculation of U_p 119
Figure S.1 – Example of schematic drawings, showing the different controlgear insulation coordination 122

Table 1 – Required rated impulse withstand voltage of equipment.....22
Table 2 – Working voltage and U_{out} steps.....27
~~Table 3 – Minimum distances for a.c. (50/60 Hz) sinusoidal voltages .....~~
~~Table 4 – Minimum distances for non sinusoidal pulse voltages .....~~
Table 3 – Electric strength test voltage.....32
Table 4 – Theoretical test temperatures for ballasts subjected to an endurance test duration of 30 days 35
Table 5 – Minimum creepage distance on printed circuit board 39
Table 6 – Insulation requirements between active parts and accessible conductive parts.....45
Table 7 – Minimum creepage distances for working voltage 50
Table 8 – Minimum value of creepage distances for sinusoidal or non-sinusoidal working voltages at different frequency ranges; basic or supplementary insulation 51
Table 9 – Minimum clearances for working voltages 53
Table 10 – Minimum distances of clearances for sinusoidal or non-sinusoidal voltages; inhomogeneous field conditions; basic or supplementary insulation.....55
Table 11 – Minimum distances of clearances for sinusoidal or non-sinusoidal voltages; inhomogeneous field conditions; reinforced insulation.....56
Table B.1 – Thermal protection operation 65
Table B.2 – Thermal protection operation 66
Table G.1 – Component values for measurement of pulse energy 84
Table K.1 – Minimum values for electrical tests 96
Table L.1 – Symbols for marking if marking is used 100
Table L.2 – Values of temperatures in normal use 101
Table L.3 – Values of insulation resistances 102

AVA Documents
Document Sharing Hub
Full document details: IEC 61347-1 2015 RLV

Table L.4 – Table of dielectric strength test voltages for controlgears intended for use in impulse withstand Category II 103
Table L.5 – Distances through insulation (DTI) for the impulse withstand category II / material group IIIa (175 CTI < 400) 104
Table M.1 – Table of dielectric strength test voltages for controlgears intended for use in impulse withstand Category III 105
Table N.1 – Electric strength test voltage required during the mandrel test 108
Table P.1 – Minimum creepage distances for working voltages and rated voltages with frequencies up to 30 kHz 113
Table P.2 – Minimum value of creepage distances for sinusoidal or non-sinusoidal working voltages at different frequency ranges; basic or supplementary insulation 114
Table P.3 – Impulse withstand test voltage for products of impulse withstand category II 117
Table T.1 – Minimum clearances for working voltages – Impulse withstand category III 123
Table T.2 – Impulse withstand test voltages of impulse withstand category III for lamp controlgear protected against pollution by coating or potting material 124
Table T.3 – Distances through insulation (DTI) for the impulse withstand category III/material group IIIa (175 CTI < 400) 125

Documents
Document Sharing Hub
Full document details: IEC 61347-1 2015 RLV

INTERNATIONAL ELECTROTECHNICAL COMMISSION

LAMP CONTROLGEAR –

Part 1: General and safety requirements

FOREWORD

1) The International Electrotechnical Commission (IEC) is a worldwide organization for standardization comprising all national electrotechnical committees (IEC National Committees). The object of IEC is to promote international co-operation on all questions concerning standardization in the electrical and electronic fields. To this end and in addition to other activities, IEC publishes International Standards, Technical Specifications, Technical Reports, Publicly Available Specifications (PAS) and Guides (hereafter referred to as "IEC Publication(s)"). Their preparation is entrusted to technical committees; any IEC National Committee interested in the subject dealt with may participate in this preparatory work. International, governmental and non-governmental organizations liaising with the IEC also participate in this preparation. IEC collaborates closely with the International Organization for Standardization (ISO) in accordance with conditions determined by agreement between the two organizations.
2) The formal decisions or agreements of IEC on technical matters express, as nearly as possible, an international consensus of opinion on the relevant subjects since each technical committee has representation from all interested IEC National Committees.
3) IEC Publications have the form of recommendations for international use and are accepted by IEC National Committees in that sense. While all reasonable efforts are made to ensure that the technical content of IEC Publications is accurate, IEC cannot be held responsible for the way in which they are used or for any misinterpretation by any end user.
4) In order to promote international uniformity, IEC National Committees undertake to apply IEC Publications transparently to the maximum extent possible in their national and regional publications. Any divergence between any IEC Publication and the corresponding national or regional publication shall be clearly indicated in the latter.
5) IEC itself does not provide any attestation of conformity. Independent certification bodies provide conformity assessment services and, in some areas, access to IEC marks of conformity. IEC is not responsible for any services carried out by independent certification bodies.
6) All users should ensure that they have the latest edition of this publication.
7) No liability shall attach to IEC or its directors, employees, servants or agents including individual experts and members of its technical committees and IEC National Committees for any personal injury, property damage or other damage of any nature whatsoever, whether direct or indirect, or for costs (including legal fees) and expenses arising out of the publication, use of, or reliance upon, this IEC Publication or any other IEC Publications.
8) Attention is drawn to the Normative references cited in this publication. Use of the referenced publications is indispensable for the correct application of this publication.
9) Attention is drawn to the possibility that some of the elements of this IEC Publication may be the subject of patent rights. IEC shall not be held responsible for identifying any or all such patent rights.

This redline version of the official IEC Standard allows the user to identify the changes made to the previous edition. A vertical bar appears in the margin wherever a change has been made. Additions are in green text, deletions are in strikethrough red text.

Documents
Document Sharing Hub

Full document details: IEC 61347-1 2015 RLV

International Standard IEC 61347-1 has been prepared by subcommittee 34C: Auxiliaries for lamps, of IEC technical committee 34: Lamps and related equipment.

This third edition cancels and replaces the second edition published in 2007, Amendment 1:2010 and Amendment 2:2012. This edition constitutes a technical revision.

This edition includes the following significant technical changes with respect to the previous edition:

a) additional marking requirements;

b) additional requirements for creepage distances and clearances:

for working voltages with operating frequencies up to 30 kHz;

for working voltages with higher operating frequencies than 30 kHz;

for impulse and resonance voltages ignition;

for basic, supplementary and reinforced insulation;

for insulation between circuits;

for coated or potted controlgear;

c) modification of definition of ELV and FELV;

d) modification of schematic drawing, showing the different controlgear classification and insulation requirements;

e) scope extension;

f) new Annex A: test to establish whether a conductive part is a live part which may cause an electric shock;

g) new Annex M: creepage distances and clearances for controlgear where a higher degree of availability (impulse withstand category III) may be requested;

h) new Annex Q: example for U_p calculation;

i) new Annex P: creepage distances and clearances and distance through isolation (DTI) for lamp controlgear which are protected against pollution by the use of coating or potting;

j) new Annex R: concept of creepage distances and clearances.

The text of this standard is based on the following documents:

FDIS	Report on voting
34C/1118/FDIS	34C/1135/RVD

Full information on the voting for the approval of this standard can be found in the report on voting indicated in the above table.

This publication has been drafted in accordance with the ISO/IEC Directives, Part 2.

This Part 1 is to be used in conjunction with the appropriate Part 2, which contains clauses to supplement or modify the corresponding clauses in Part 1, to provide the relevant requirements for each type of product.

NOTE In this standard, the following print types are used.

– Requirements proper: in roman type.

– *Test specifications: in italic type*.

– Explanatory matter: in smaller roman type.

A list of all parts of the IEC 61347 series, published under the general title *Lamp controlgear*, can be found on the IEC website.

AVA Documents
Document Sharing Hub

Full document details: IEC 61347-1 2015 RLV

The committee has decided that the contents of this publication will remain unchanged until the stability date indicated on the IEC web site under "http://webstore.iec.ch" in the data related to the specific publication. At this date, the publication will be

- reconfirmed,
- withdrawn,
- replaced by a revised edition, or
- amended.

IMPORTANT – The "colour inside" logo on the cover page of this publication indicates that it contains colours which are considered to be useful for the correct understanding of its contents. Users should therefore print this publication using a colour printer.

Documents
Document Sharing Hub

Full document details: IEC 61347-1 2015 RLV

INTRODUCTION

This part of IEC 61347 provides a set of general and safety requirements and tests which are considered to be generally applicable to most types of lamp controlgear and which can be called up as required by the different parts that make up IEC 61347-2. This Part 1 is thus not to be regarded as a specification in itself for any type of lamp controlgear, and its provisions apply only to particular types of lamp controlgear, to the extent determined by the appropriate Part 2 of IEC 61347.

The parts which make up IEC 61347-2, in referring to any of the clauses of this part, specify the extent to which such a clause is applicable and the order in which the tests are to be performed; they also include additional requirements as necessary. The order in which the clauses of this part are numbered has no particular significance, as the order in which their provisions apply is determined for each type of lamp controlgear by the appropriate Part 2 of the IEC 61347-2 series. All such parts are self-contained and therefore do not contain references to each other.

Where the requirements of any of the clauses of this part of IEC 61347 are referred to in the various parts that make up IEC 61347-2 by the phrase "The requirements of clause n of IEC 61347-1 apply", this phrase will be interpreted as meaning that all requirements of the clause in question of Part 1 apply, except any which are clearly inapplicable to the particular type of lamp controlgear covered by the Part 2 concerned.

Lamp controlgear which complies with the text of this standard will not necessarily be judged to comply with the safety principles of the standard if, when examined and tested, it is found to have other features which impair the level of safety covered by these requirements.

Lamp controlgear employing materials or having forms of construction differing from those detailed in the requirements of this standard may be examined and tested according to the intent of the requirement and, if found to be substantially equivalent, may be judged to comply with the safety principles of the standard.

Performance requirements for lamp controlgear are the subject of IEC 60921, IEC 60923, IEC 60925, IEC 60927, IEC 60929, IEC 61047 and IEC 62384 ~~(in preparation)~~ as appropriate for the type of lamp controlgear.

~~NOTE~~ Safety requirements ensure that electrical equipment constructed in accordance with these requirements does not endanger the safety of persons, domestic animals or property when properly installed and maintained and used in applications for which it was intended.

Requirements for electronic lamp controlgear for other types of lamps will be the subject of a separate standard, as the need arises.

~~NOTE~~ Controlgear can consist of a printed circuit board and may incorporate the following:

– controlgear;
– lampholder(s);
– switch(es);
– supply terminals.

The lamp controlgear should comply with this standard.

The lampholders(s), switch(es) and supply terminals should comply with their own standards.

AVA Documents
Document Sharing Hub

Full document details: IEC 61347-1 2015 RLV

LAMP CONTROLGEAR –

Part 1: General and safety requirements

1 Scope

This part of IEC 61347 specifies general and safety requirements for lamp controlgear for use on d.c. supplies up to 250 V and/or a.c. supplies up to 1 000 V at 50 Hz or 60 Hz.

This standard also covers lamp controlgear for lamps which are not yet standardized.

Tests dealt with in this standard are type tests. Requirements for testing individual lamp controlgear during production are not included.

Requirements for semi-luminaires are given in IEC 60598-1:2014 (see definition 1.2.60).

~~In addition to the requirements given in this Part 1 of IEC 61347, Annex B sets out general and safety requirements applicable to thermally protected lamp controlgear.~~

~~Annex C sets out additional general and safety requirements as they apply to electronic lamp controlgear with means of protection against overheating.~~

~~Additional requirements for built-in ballasts with double or reinforced insulation are given in Annex I.~~

Particular requirements for controlgears providing safety extra low voltage (from now on SELV) are given in Annex L.

It can be expected that lamp control gear which comply with this standard will not compromise safety between 90 % and 110 % of their rated supply voltage in independent use and when operated in luminaires complying with the safety standard IEC 60598-1 and the relevant part IEC 60598-2-xx and with lamps complying with the relevant lamp standards. Performance requirements may require tighter limits.

2 Normative references

The following documents, in whole or in part, are normatively referenced in this document and are indispensable for its application. For dated references, only the edition cited applies. For undated references, the latest edition of the referenced document (including any amendments) applies.

IEC 60065:2001[1], *Audio, video and similar electronic apparatus – Safety requirements*

IEC 60068-2-14:2009, *Environmental testing – Part 2-14: Tests – Test N: Change of temperature*

IEC 60081, *Double-capped fluorescent lamps – Performance specifications*

IEC 60085:2007, *Electrical insulation – Thermal classification and designation*

[1] Seventh edition. This edition has been replaced in 2014 by IEC 60065:2014.

Documents
Document Sharing Hub

Full document details: IEC 61347-1 2015 RLV

IEC 60112:2003, *Method for the determination of the proof and the comparative tracking indices of solid insulating materials*
IEC 60112:2003/AMD1:2009

IEC 60216 (all parts), *Electrical insulating materials – Thermal endurance properties*

IEC 60317-0-1:~~1997~~ 2013, *Specifications for particular types of windings wires – Part 0-1: General requirements – Enamelled round copper wire*~~2)~~
~~Amendment 1 (1999)~~
~~Amendment 2 (2005)~~

IEC 60384-14, *Fixed capacitors for use in electronic equipment – Part 14: Sectional specification: Fixed capacitors for electromagnetic interference suppression and connection to the supply mains*

IEC 60417, *Graphical symbols for use on equipment.* Available at http://www.graphical-symbols.info/equipment

IEC 60449:1973, *Voltage bands for electrical installations of buildings*
IEC 60449:1973/AMD1:1979

IEC 60529:1989, *Degrees of protection provided by enclosures (IP Code)*~~3)~~
IEC 60529:1989/AMD1:1999
IEC 60529:1989/AMD2:2013

IEC 60598-1:~~2003~~ 2014, *Luminaires – Part 1: General requirements and tests*

IEC 60598-2, (all parts), *Luminaires – Part 2: Particular requirements*

IEC 60664-1:2007, *Insulation coordination for equipment within low-voltage systems – Part 1: Principles, requirements and tests*

~~IEC 60664-3, *Insulation coordination for equipment within low-voltage systems – Part 3: Use of coating, potting or moulding for protection against pollution*~~

IEC 60664-4:2005, *Insulation coordination for equipment within low-voltage systems – Part 4: Consideration of high-frequency voltage stress*

IEC 60691:2002, *Thermal-links – Requirements and application guide*

IEC 60695-2-10, *Fire hazard testing – Part 2-10: Glowing/hot-wire based test methods – Glow-wire apparatus and common test procedure*

IEC 60695-11-5, *Fire hazard testing – Part 11-5: Test flames – Needle-flame test method – Apparatus, confirmatory test arrangement and guidance*

IEC 60730-2-3, *Automatic electrical controls for household and similar use – Part 2: Particular requirements for thermal protectors for ballasts for tubular fluorescent lamps*

IEC 60884-2-4, *Plugs and socket-outlets for household and similar purposes – Part 2-4: Particular requirements for plugs and socket outlets for SELV*

~~2) There exists a consolidated edition 2.2 (2005) including the base publication and its Amendments 1 and 2.~~

~~3) There exists a consolidated edition 2.1 (2001) including the base publication and its Amendment 1.~~

Documents
Document Sharing Hub
Full document details: IEC 61347-1 2015 RLV

IEC 60901, *Single-capped fluorescent lamps – Performance specifications*

IEC 60906-3, *IEC System of plugs and socket-outlets for household and similar purposes – Part 3: SELV plugs and socket-outlets, 16 A 6 V, 12 V, 24 V, 48 V, a.c. and d.c.*

IEC 60921:2004, *Ballasts for tubular fluorescent lamps – Performance requirements*
IEC 60921:2004/AMD1:2006

IEC 60923:2005, *Auxiliaries for lamps – Ballasts for discharge lamps (excluding tubular fluorescent lamps) – Performance requirements*

~~IEC 60929:2006, *AC-supplied electronic ballasts for tubular fluorescent lamps – Performance requirements*~~

IEC 60950-1, *Information technology equipment – Safety – Part 1: General requirements*

~~IEC 60990:1999, *Methods of measurement of touch current and protective conductor current*~~

IEC 61180-1:1992, *High-voltage test techniques for low voltage equipment – Part 1: Definitions, test and procedure requirements*

IEC 61189-2:2006, *Test methods for electrical materials, printed boards and other interconnection structures and assemblies – Part 2: Test methods for materials for interconnection structures*

IEC 61249-2 (all parts), *Materials for printed boards and other interconnecting structures*

IEC 61347-2 (all parts), *Lamp controlgear – Part 2: Particular requirements*

IEC 61347-2-8, *Lamp controlgear – Part 2-8: Particular requirements for ballasts for fluorescent lamps*

IEC 61347-2-9:~~2000~~ 2012, *Lamp controlgear – Part 2-9: Particular requirements~~ for ballasts~~ electromagnetic controlgear for discharge lamps (excluding fluorescent lamps)*
~~Amendment 1 (2003)~~
~~Amendment 2 (2006)~~

IEC 61558-1:2005, *Safety of power transformers, power supplies, reactors and similar products – Part 1: General requirements and tests*

IEC 61558-2-6:2009, *Safety of transformers, reactors, power supply units and similar products for supply voltages up to 1 100 V – Part 2-6: Particular requirements and tests for safety isolating transformers and power supply units incorporating safety isolating transformers*

IEC 61558-2-16:2009, *Safety of transformers, reactors, power supply units and similar products for supply voltages up to 1 100 V – Part 2-16: Particular requirements and tests for switch mode power supply units and transformers for switch mode power supply units*

ISO 4046-4:2002, *Paper, board, pulp and related terms – Vocabulary – Part 4: Paper and board grades and converted products*

3 Terms and definitions

For the purposes of document, the following terms and definitions apply.

Documents
Document Sharing Hub

Full document details: IEC 61347-1 2015 RLV

3.1
lamp controlgear
one or more components between the supply and one or more lamps which may serve to transform the supply voltage, limit the current of the lamp(s) to the required value, provide starting voltage and preheating current, prevent cold starting, correct power factor or reduce radio interference

3.1.1
built-in lamp controlgear
lamp controlgear generally designed to be built into a luminaire, a box, an enclosure or the like and not intended to be mounted outside a luminaire, etc. without special precautions

Note 1 to entry: The controlgear compartment in the base of a road lighting column is considered to be an enclosure.

3.1.2
independent lamp controlgear
lamp controlgear consisting of one or more separate elements so designed that it can be mounted separately outside a luminaire, with protection according to the marking of the lamp controlgear and without any additional enclosure

Note 1 to entry: This may consist of a built-in lamp controlgear housed in a suitable enclosure which provides all the necessary protection according to its markings.

3.1.3
integral lamp controlgear
lamp controlgear which forms a non-replaceable part of a luminaire and which cannot be tested separately from the luminaire

3.2
ballast
unit inserted between the supply and one or more discharge lamps which by means of inductance, capacitance, or a combination of inductance and capacitance, serves mainly to limit the current of the lamp(s) to the required value

Note 1 to entry: It may also include means for transforming the supply voltage and arrangements which help provide starting voltage and pre-heating current.

3.2.1
d.c. supplied electronic ballast
d.c. to a.c invertor using semiconductor devices which may include stabilizing elements for supplying power to one or more fluorescent lamps

3.2.2
reference ballast
special inductive ballast designed for the purpose of providing comparison standards for use in testing ballasts and for the selection of reference lamps, and essentially characterized by a stable voltage-to-current ratio, which is relatively uninfluenced by variations in current, temperature and magnetic surroundings

Note 1 to entry: See also Annex C of IEC 60921:2004 and Annex A of IEC 60923:2005.

3.2.3
controllable ballast
electronic ballast whose lamp operating characteristics can be changed by means of a signal via mains or extra control input

Documents
Document Sharing Hub
Full document details: IEC 61347-1 2015 RLV

3.3
reference lamp
lamp selected for testing ballasts which, when associated with a reference ballast, has electrical characteristics which are close to the rated values as stated in the relevant lamp standard

3.4
calibration current of a reference ballast
value of the current on which are based the calibration and control of the reference ballast

Note 1 to entry: Such a current should preferably be approximately equal to the rated running current of the lamps for which the reference ballast is suitable.

3.5
supply voltage
voltage applied to the complete circuit of lamp(s) and lamp controlgear

3.6
working voltage
highest r.m.s. voltage which may occur across any insulation at rated supply voltage, transients being neglected, in open-circuit conditions or during normal operation

3.7
design voltage
voltage declared by the manufacturer to which all the lamp controlgear characteristics are related

Note 1 to entry: This value is not less than 85 % of the maximum value of the rated voltage range.

3.8
voltage range
range of supply voltage over which the ballast is intended to be operated

3.9
rated no-load output voltage
output voltage when the ballast is connected to rated supply voltage at rated frequency, with no load on the output, transient and starting phase being neglected

3.10
supply current
current supplied to the complete circuit of lamp(s) and lamp controlgear

3.11
live part
conductive part which may cause an electric shock in normal use

Note 1 to entry: The neutral conductor is, however, regarded as a live part.

Note 2 to entry: The test to determine whether or not a conductive part is a live part which may cause an electric shock is given in Annex A.

3.12
type test
test or series of tests made on a type test sample for the purpose of checking compliance of the design of a given product with the requirements of the relevant standard

3.13
type test sample
sample consisting of one or more similar units submitted by the manufacturer or responsible vendor for the purpose of a type test

AVA Documents
Document Sharing Hub

Full document details: IEC 61347-1 2015 RLV

3.14
circuit power factor
λ
power factor of the combination of lamp controlgear and the lamp or lamps for which the lamp controlgear is designed

3.15
high power factor ballast
ballast having a circuit power factor of at least 0,85 (leading or lagging)

Note 1 to entry: The value 0,85 takes into account the distortion of the current waveform.

Note 2 to entry: For North America, a high power factor is defined as a power factor of at least 0,9.

3.16
rated maximum temperature
t_c
highest permissible temperature which may occur on the outer surface (at the indicated place, if marked) under normal operating conditions and at the rated voltage or the maximum of the rated voltage range

3.17
rated maximum operating temperature of a lamp controlgear winding
t_w
winding temperature assigned by the manufacturer as the highest temperature at which a 50 Hz/60 Hz lamp controlgear may be expected to have a service life of at least 10 years' continuous operation

3.18
rectifying effect
effect which may occur at the end of lamp life when one cathode is either broken or has insufficient electron emission, resulting in the arc current being constantly unequal in consecutive half-cycles

3.19
test duration of endurance test
D
optional duration of the endurance test on which the temperature conditions are based

3.20
degradation of insulation of a ballast winding
S
constant which determines the degradation of ballast insulation

3.21
ignitor
device intended to generate voltage pulses to start discharge lamps and which does not provide for the preheating of electrodes

Note 1 to entry: The element that releases the starting voltage pulse may be either triggered or non-triggered.

3.22
protective earth
protective ground

terminal to which are connected parts which are connected to earth for safety reasons

Documents
Document Sharing Hub
Full document details: IEC 61347-1 2015 RLV

Note 1 to entry: The source for this symbol is IEC 60417-5019 (~~2002-10~~ 2006-08).

3.23
functional earth
functional ground

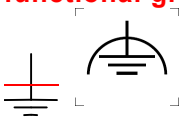

terminal to which are connected parts which may be necessary to connect to earth for reasons other than safety

~~NOTE 1 In some instances, starting aids adjacent to the lamp(s) are connected to one of the output terminals but need not be connected to the earth on the supply side.~~

Note 1 to entry: The source for this symbol is ~~IEC 60417-5017 (2002-10)~~ IEC 60417-5018 (2011- 07).

Note 2 to entry: In some cases, functional earthing may be necessary to facilitate starting and/or ~~for e.m.c. purposes~~ to avoid radio interference.

3.24
frame
chassis

terminal whose potential is taken as reference

Note 1 to entry: The source for this symbol is IEC 60417-5020 (2002-10).

3.25
control terminals
connections, other than power supply terminals, to the electronic ballast, which are used to exchange information with the ballast

Note 1 to entry: The power supply terminals can also be used to exchange information with the ballast.

3.26
control signal
signal, which may be an a.c. or d.c. voltage, and which by analogue, digital or other means may be modulated to exchange information with the ballast

3.27
extra-low voltage
ELV
voltage which does not exceed 50 V a.c. or 120 V ripple free d.c. between conductors or between any conductor and earth

Note 1 to entry: "Ripple free" is conventionally defined for sinusoidal ripple voltage as a ripple content of not more than 10 % r.m.s.: the maximum peak value does not exceed 140 V for a nominal 120 V ripple-free d.c. system.

Note 2 to entry: This voltage corresponds to the voltage band I of IEC 60449.

3.27.1
safety extra low voltage
SELV
ELV in a circuit which is isolated from the mains supply by insulation not less than that between the primary and secondary circuits of a safety isolating transformer according to IEC 61558-2-6

Note 1 to entry: Maximum voltage lower than 50 V a.c. r.m.s. or 120 V ripple free d.c. may be specified in particular requirements, especially when direct contact with current-carrying parts is allowed.

Documents
Document Sharing Hub
Full document details: IEC 61347-1 2015 RLV

Note 2 to entry: The voltage limit should not be exceeded at any load between full loads and no-load when the source is a safety isolation transformer.

Note 3 to entry: "Ripple free" is conventionally an r.m.s. ripple voltage not more than 10 % of the d.c. component: the maximum peak value does not exceed 140 V for a nominal 120 V ripple free d.c. system and 70 V for a nominal 60 V ripple free d.c. system.

3.27.2
functional extra low voltage circuit
FELV
ELV voltage for functional reason and not fulfilling the requirements for SELV (or PELV)

Note 1 to entry: FELV has simple separation from LV.

Note 2 to entry: A FELV circuit is not safe to touch and may be connected to protective earth.

[SOURCE: IEC 61558-1:2005, 3.7.19, modified]

3.28
body
term used in this standard as a general term which includes all accessible metal parts, shafts, handles, knobs, grips and the like, accessible metal fixing screws and metal foil applied on accessible surfaces of insulating material and does not include non-accessible metal parts

3.29
class I lamp controlgear
independent controlgear in which protection against electric shock does not rely on basic insulation only, but which includes an additional safety precaution in such a way that means are provided for the connection of accessible conductive parts to the protective (earthing) conductor in the fixed wiring of the installation in such a way that accessible conductive parts cannot become live in the event of a failure of the basic insulation

Note 1 to entry: Class I lamp independent controlgear may have parts with double or reinforced insulation.

Note 2 to entry: Class I lamp independent controlgear may have parts in which protection against shock relies on operation at safety extra-low voltage (SELV)

3.30
class II lamp controlgear
independent controlgear in which protection against electric shock does not rely on basic insulation only, but in which additional safety precautions such as double insulation or reinforced insulation are provided, there being no provision for protective earthing or reliance upon installation conditions

3.31
class III lamp controlgear
independent controlgear in which protection against electric shock relies on supply at safety extra-low voltage (SELV) and in which voltages higher than those of SELV are not generated

3.32
protective impedance device
component or assembly of components the impedance and construction of which are such as to ensure that steady state touch current and charge are limited to a non-hazardous level

3.33
maximum working voltage
U_{out}

maximum occurring working voltage (r.m.s.) between the output terminals or between the output terminals and earth, during normal or abnormal operating condition

Note 1 to entry: Transients and ignition voltages have to be neglected.

Documents
Document Sharing Hub

Full document details: IEC 61347-1 2015 RLV

3.34
basic insulation
insulation of parts which provide protection against electrical shock under fault-free conditions

3.35
double insulation
insulation of parts with two layers of insulation which provide protection against electrical shock under single fault condition

3.36
reinforced insulation
insulation of parts which provide a degree of protection as double insulation

3.37
clearance
shortest distance in air between two conductive parts

[SOURCE: IEC 60664-1:2007, 3.2]

3.38
creepage distance
shortest distance along the surface of a solid insulating material between two conductive parts

[SOURCE: IEC 60050:2001, 151.15.50]

3.39
solid insulation
solid non-conducting material interposed between two conductive parts

[SOURCE: IEC 60664-1:2007, 3.2]

3.40
critical frequency
f_{crit}
frequency at which the reduction of the breakdown voltage of a clearance begins (occurs)

3.41
homogeneous field
electric field which has an essentially constant voltage gradient between electrodes (uniform field), such as that between two spheres where the radius of each sphere is greater than the distance between them

[SOURCE: IEC 60664-1:2007, 3.14]

3.42
inhomogeneous field
electric field which does not have an essentially constant voltage gradient between electrodes (non-uniform field)

Note 1 to entry: The inhomogeneous field condition of a point-plane electrode configuration is the worst case with regard to voltage withstand capability. It is represented by a point electrode having a 30 μm radius and a plane of 1 m × 1 m.

[SOURCE: IEC 60664-2-1:2011, 3.16, modified — The second note has been deleted.]

Documents
Document Sharing Hub

Full document details: IEC 61347-1 2015 RLV

3.43
transients
transient overvoltage
short duration overvoltage of a few milliseconds or less, oscillatory or non-oscillatory, usually highly damped

Note 1 to entry: The duration of the transient is the time interval in which the voltage exceeds 10 % of its peak value.

[SOURCE: IEC 60050:1987, 604.03.13, modified — The notes have been modified.]

3.44
impulse withstand category
DEPRECATED: overvoltage category
numeral defining a transient overvoltage condition

Note 1 to entry: The following explanation together with Table 1 is taken from IEC 60364-4-44:2007.

a) Purpose of classification of impulse withstand voltages

Overvoltage categories are defined within electrical installations for the purpose of insulation co-ordination and a related classification of equipment with impulse withstand voltages is provided, see Table 1.

The rated impulse withstand voltage is an impulse withstand voltage assigned by the manufacturer to the equipment or to a part of it, characterizing the specified withstand capability of its insulation against overvoltages (in accordance with 3.9.2 of IEC 60664-1:2007).

b) The impulse withstand voltage is used to classify equipment energized directly from the mains.

Impulse withstand voltages for equipment selected according to the nominal voltage are provided to distinguish different levels of availability of equipment with regard to continuity of service and an acceptable risk of failure. By selection of equipment with a classified impulse withstand voltage; insulation co-ordination can be achieved in the whole installation, reducing the risk of failure to an acceptable level.

Transient overvoltages transmitted by the supply distribution system are not significantly attenuated downstream in most installations.

Table 1 – Required rated impulse withstand voltage of equipment

Nominal voltage of the installation [a] V		Impulse withstand voltage for equipment kV [b]			
Three-phase systems	**Single-phase systems with middle point**	**Equipment at the origin of the installation (impulse withstand category IV)**	**Equipment of distribution and final circuits (impulse withstand category III)**	**Appliances and current-using equipment (impulse withstand category II)**	**Specially protected equipment (impulse withstand category I)**
–	120-240	4	2,5	1,5	0,8
230/400 277/480	–	6	4	2,5	1,5
400/690	–	8	6	4	2,5
1 000	–	12	8	6	4

[a] According to IEC 60038.

[b] This impulse withstand voltage is applied between live conductors and PE.

3.45
maximum working peak output voltage
$\hat{U}_{out}$
maximum repetitive occurring peak working voltage between the output terminals or between the output terminals and earth, during normal or abnormal operating condition and with transients neglected

AVA Documents
Document Sharing Hub
Full document details: IEC 61347-1 2015 RLV

3.46
ignition voltage
peak voltage applied to ignite a discharge lamp

3.46.1
ignition pulse voltage
peak ignition voltage with a total duration of ≤ 750 µs (summation of all pulses durations) within 10 ms, with the duration time (width) of each pulse being measured at the level of 50 % of the maximum absolute peak value

Note 1 to entry: Ignition pulse waveforms, which are considered as ignition pulse voltage, should not contain any dominant frequency above 30 kHz or should be usually highly damped (after 20 µs the peak voltage level should be less than one half of the maximum peak voltage). For the assessment of the dominant frequency IEC 60664-4:2005, Annex E should be consulted.

3.47
U_p
equivalent transformed peak voltage
transformed output peak voltage, which is converted for the worst case peak voltage with its related frequency into an ignition pulse voltage

Note 1 to entry: The value of the declared equivalent transformed output peak voltage is the essential parameter for selecting the associated components

Note 2 to entry: See 3.46.1.

Note 3 to entry: To determine the declared equivalent transformed output peak voltage for basic insulation U_p [basic] the worst case combination of the maximum occurring peak voltage and frequency has to be taken into account, which means the maximum clearance according Table 10 for basic insulation.

Note 4 to entry: To determine the declared equivalent transformed output peak voltage for the reinforced insulation U_p [reinforced] the worst case combination of the maximum occurring peak voltage and frequency has to be taken into account, which means the maximum clearance according Table 11 for reinforced insulation.

3.48
LV supply
circuits, wiring or part of them connected to the low voltage (LV) public distribution network

EXAMPLE: 230V distribution network.

Note 1 to entry: The voltage of these circuits correspond to the voltage band II of IEC 60449.

Note 2 to entry: SELV and FELV are not included in the definition given here for a LV supply.

Note 3 to entry: High voltage (HV) supply corresponding to band III of IEC 60449 is not included in the definition given here for a LV supply.

4 General requirements

Lamp controlgear shall be so designed and constructed that in normal use it operates without danger to the user or surroundings.

Compliance is checked by carrying out all the tests specified.

Requirements for insulation materials used for double or reinforced insulation of controlgear are specified in Annex N of this standard.

In addition, independent lamp controlgear shall comply with the requirements of IEC 60598-1, including ~~the classification and~~ marking requirements of that standard such as IP classification~~, marking, etc~~ and mechanical stress. Built-in ballasts with double or reinforced insulation shall comply additionally with the requirements of Annex I.

Documents
Document Sharing Hub
Full document details: IEC 61347-1 2015 RLV

Built-in electronic controlgear with double or reinforced insulation shall comply additionally with the requirements of Annex O.

Some built-in lamp controlgear do not have their own enclosure and are composed of printed circuit boards and electrical components thereon, and shall comply with the requirements of IEC 60598-1 when built into the luminaire. Integral lamp controlgear not having their own enclosure shall be treated as integral components of luminaires defined in Clause 0.5 in IEC 60598-1:2014 and shall be tested assembled in the luminaire.

~~NOTE~~ It is recommended for the luminaire manufacturer to confer about the relevant test requirements with the controlgear manufacturer, if necessary.

In the lamp safety standards, “Information for ballast design” is given for the safe operation of lamps. This shall be regarded as normative when testing ballasts.

Controlgears providing SELV shall comply with the additional requirements given in Annex L. This includes especially insulation resistance, electric strength, creepage distances and clearances between the primary and secondary circuit.

5 General notes on tests

5.1 Tests according to this standard are type tests.

~~NOTE~~ The requirements and tolerances permitted by this standard are related to testing of a type test sample submitted by the manufacturer for that purpose. Compliance of the type test sample does not ensure compliance of the whole production of a manufacturer with this safety standard.

Conformity of production is the responsibility of the manufacturer and may include routine tests and quality assurance in addition to type testing.

5.2 Unless otherwise specified, the tests are carried out at an ambient temperature of 10 °C to 30 °C.

5.3 Unless otherwise specified, the type test is carried out on one sample consisting of one or more items submitted for the purpose of the type test.

In general, all tests are carried out on each type of lamp controlgear or, where a range of similar lamp controlgear is involved, for each wattage in the range or on a representative selection from the range, as agreed with the manufacturer.

Certain countries require that three samples of lamp controlgear be tested and, in such cases, if more than one sample fails, then the type is rejected. If one sample fails, the test is repeated using three other samples and all of these shall comply with the test requirements.

If the tests of 14.3 or 15.5 of IEC 61558-1:2005 have to made, three additional samples are needed. These samples are used only for the test of 14.3 or 15.5 of IEC 61558-1:2005, respectively.

5.4 The tests shall be carried out in the order listed in this standard unless otherwise specified in Parts 2 of IEC 61347.

5.5 For the thermal test, independent lamp controlgear shall be mounted in a test corner consisting of three dull-black painted wooden/wood fibre boards 15 mm to 20 mm thick and arranged so as to resemble two walls and the ceiling of a room. The lamp controlgear is secured to the ceiling as close as possible to the walls, the ceiling extending at least 250 mm beyond the other side of the lamp controlgear.

AVA Documents Document Sharing Hub

Full document details: IEC 61347-1 2015 RLV

5.6 For d.c. supplied ballasts intended for use from a battery supply it is permissible to substitute a d.c. power source other than a battery, provided that the source impedance is equivalent to that of a battery.

NOTE A non-inductive capacitor of appropriate rated voltage and with a capacitance of at least 50 μF, connected across the supply terminals of the unit under test, normally provides a source impedance simulating that of a battery.

5.7 When testing lamp controlgear to the requirements of this standard, earlier test reports may be updated in accordance with this edition by submitting a new sample for test together with the previous test report.

Full type testing may not generally be necessary and the product and the previous test results shall only be reviewed against any amended clause marked “R” as scheduled in ~~normative~~ Annex J~~: Schedule of more onerous requirements~~.

5.8 Where the terms "voltage" and "current" are used, they imply the r.m.s. values unless otherwise stated.

6 Classification

Lamp controlgear is classified, according to the method of installation, as

– built-in;
– independent;
– integral.

7 Marking

7.1 Items to be marked

The parts that make up IEC 61347-2 state which of the following items shall be marked as mandatory markings or provided as information to be given either on the lamp controlgear or made available in the manufacturer’s catalogue or similar.

For controlgear without an enclosure, and classified as built-in (e.g. open printed circuit board assembly), only items a) and b) are to be considered mandatory for marking on the controlgear. Other mandatory markings required by the IEC 61347-2 part shall be provided as information to be given either on the controlgear or made available in the manufacturer’s catalogue or similar.

a) Mark of origin (trade mark, manufacturer's name or name of the responsible vendor/ supplier).

b) Model number or type reference of the manufacturer.

c) Symbol for independent lamp controlgear [SOURCE: 60417-5138 (2002-10)] if applicable.

d) The correlation between replaceable and interchangeable parts, including fuses, of lamp controlgear shall be marked unambiguously by legends on the lamp controlgear or, with the exception of fuses, be specified in the manufacturer's catalogue.

e) Rated supply voltage (or voltages, if there are several), voltage range, supply frequency and supply current(s); the supply current may be given in the manufacturer's literature.

f) The earthing terminals (if any) shall be identified by the symbol ~~, or~~ 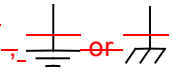

Documents
Document Sharing Hub

[SOURCE: 60417-5019 (2006-08)] or [SOURCE: 60417-5018 (2011-07)]

These symbols shall not be placed on screws or other easily removable parts.

If the lamp control gear is marked with an earthing symbol, the manufacturer's instruction shall contain the information whether it is permitted to use the control gear also without connection to earth.

~~NOTE~~ For the use of symbols, see IEC 60417.

g) The claimed value of the rated maximum operating temperature of the winding following the symbol t_w, values increasing in multiples of 5 °C.

h) Indication that the lamp controlgear ~~does not rely~~ relies upon the luminaire enclosure for protection against accidental contact with live parts.

i) Indication of the cross-section of conductors for which the terminals, if any, are suitable.

Symbol: relevant value(s) in square millimetres (mm^2) followed by a small square.

j) The lamp type and rated wattage or wattage range for which the lamp controlgear is suitable, or the designation as indicated on the lamp data sheet of the type(s) of lamp(s) for which the lamp controlgear is designed. If the lamp controlgear is intended to be used with more than one lamp, the number and rated wattages of each lamp shall be indicated.

NOTE 1 For lamp controlgear specified in IEC 61347-2-2, it is assumed that a marked wattage range includes all ratings within the range unless otherwise indicated in the manufacturer's literature.

k) Wiring diagram indicating the position and purpose of terminals. In the case of lamp controlgear having no terminals, a clear indication shall be given on the wiring diagram of the significance of the code used for connecting wires. Lamp controlgear that operates in specific circuits only shall be identified accordingly, for example by marking or wiring diagram.

For controllable controlgear, control terminals shall be identified in the manufacturer catalogue or similar. The classification of insulation that has been maintained between live parts and control circuits shall be provided. E.g. basic insulation, reinforced insulation.

Maintenance of the declared insulation barrier may also be dependent on other external components/products connected to the same control bus. This is the responsibility of the control system designer, not the controlgear manufacturer.

l) Value of t_c.

If this relates to a certain place on the lamp controlgear, this place shall be indicated or shall be specified in the manufacturer's catalogue.

m) Symbol for temperature declared, thermally protected controlgear (see Annex B). The dots in the triangle shall be replaced by the value of the rated maximum case temperature in degrees Celsius assigned by the manufacturer, values increasing in multiples of 10.

n) Heat sink(s) required additional to the lamp controlgear.

o) The limiting temperature of the winding under abnormal conditions which shall be respected when the controlgear is built into a luminaire, as information for luminaire design.

~~NOTE 2~~ In the case of lamp controlgear intended for circuits which do not produce abnormal conditions, or are for use only with starting devices which exempt the lamp controlgear from the abnormal conditions of Annex C of IEC 60598-1:2014, the winding temperature under abnormal conditions is not indicated.

p) The test period for the endurance test for lamp controlgear which, at the manufacturer's choice, shall be tested for a period longer than 30 days, may be indicated with the symbol D, followed by the appropriate number of days, 60, 90 or 120 in 10-day periods, the whole being placed between the brackets immediately after the t_w indication. For example, (D6) for controlgear to be tested for a period of 60 days.

NOTE 2 The standard endurance test period of 30 days need not be indicated.

Documents
Document Sharing Hub

Full document details: IEC 61347-1 2015 RLV

q) For lamp controlgear for which a constant *S* other than 4 500 is claimed by the manufacturer, the symbol *S* together with its appropriate value in thousands, for example "*S*6", if *S* has a value of 6 000.

~~NOTE 4~~ Preferred values of *S* are: 4 500, 5 000, 6 000, 8 000, 11 000, 16 000.

r) The rated no-load output voltage, when it is higher than the supply voltage.

s) Symbol indicating the kind of controlgear providing SELV.

t) The earthing terminals of an independent controlgear used for the connection of lamp compartments (if any) shall be marked with the symbol:

[SOURCE: IEC 60417-6296 (2014-09)]

This symbol shall not be placed on screws or other easily removable parts. The symbol size of the earthing terminals of an independent controlgear used for the connection of lamp compartments shall be at least 5 mm (over all, including letters).

u) Declaration of the maximum working voltage U_{out} (r.m.s.) between

- output terminals, or
- any output terminal and earth (if applicable)
- in steps as described in Table 2.

Table 2 – Working voltage and U_{out} steps

Working voltage	< 50 V	< 500 V	> 500 V
U_{out} in steps of	1 V	10 V	50 V

The highest of the specified voltage values shall be marked on the controlgear as “Output working voltage = …V” or “U-OUT = …V” or “U_{out} = …V”.

Item u) is not applicable to terminals with SELV-circuits as defined in IEC 61558-1.

v) Declaration of the maximum equivalent output peak voltage U_p between:

- output terminals;
- any output terminal and earth, if applicable.

At least the highest of the specified voltage values shall be declared, for basic and reinforced insulation (U_p [basic] = xx kV and U_p [reinforced] = xx kV)

The declaration of the maximum equivalent output peak voltage U_p is not applicable to terminals with SELV-circuits as defined in IEC 61558-1.

The declared equivalent transformed output peak voltages are only required for voltages greater than 0,5 kV.

NOTE 3 Explanation of the meaning of U_p is given in 3.47. Guidance and example for the calculation of this parameter is given in Annex Q.

w) If the creepage distance values of the Table 8 of this standard have to be used and creepage distance is greater than the related creepage distances of Table 7, the maximum output peak voltage $\hat{U}_{out}$ and its corresponding frequency f_{Uout} between:

- output terminals;
- any output terminal and earth, if applicable,

shall be declared.

Item w) is not applicable to terminals with SELV-circuits as defined in IEC 61558-1.

7.2 Durability and legibility of marking

Marking shall be durable and legible.

Documents
Document Sharing Hub
Full document details: IEC 61347-1 2015 RLV

Compliance is checked by inspection and by trying to remove the marking by rubbing lightly, for 15 s each time, with two pieces of cloth, one soaked with water and the other with petroleum spirit.

The marking shall be legible after the test.

~~NOTE~~ The petroleum spirit used should consist of a solvent hexane with a content of aromatics of maximum 0,1 % volume percentage, a kauri-butanol value of 29, an initial boiling-point of approximately 65 °C, a dry-point of approximately 69 °C and a density of approximately 0,68 g/cm³.

8 Terminals

Screw terminals shall comply with Section 14 of IEC 60598-1:2014.

Screwless terminals shall comply with Section 15 of IEC 60598-1:2014.

9 Earthing

9.1 Provisions for protective earthing (Symbol: IEC 60417-5019 (2006-08))

Earthing terminals shall comply with the requirements of Clause 8. The electrical connection/clamping means shall be adequately locked against loosening, and it shall not be possible to loosen the electrical connection/clamping means by hand without the use of a tool. For screwless terminals, it shall not be possible to loosen the clamping means/electrical connection unintentionally.

~~Earthing of lamp controlgear (other than independent lamp controlgear) via means of fixing the lamp controlgear to earthed metal is permitted. However, if a lamp controlgear has an earthing terminal, this terminal shall only be used for earthing the lamp controlgear.~~

All parts of an earthing terminal shall be such as to minimize the danger of electrolytic corrosion resulting from contact with the earth conductor or any other metal in contact with them.

The screw and the other parts of the earthing terminal shall be made of brass or other metal no less resistant to corrosion, or material with a non-rusting surface and at least one of the contact surfaces shall be bare metal.

Compliance is checked~~ by inspection, by manual test and according to the requirements of Clause 8~~ according to 7.2.3 of IEC 60598-1:2014.

9.2 Provisions for functional earthing (Symbol: IEC 60417-5018 (2011-07))

Functional earthing terminals shall comply with the requirements of Clause 8 and 9.1.

The functional earthing contact (potential) of a lamp controlgear shall be insulated from the live parts by double or reinforced insulation.

~~Lamp controlgear with conductors for protective earthing provided by tracks on printed circuit boards shall be tested as follows.~~

9.3 Lamp controlgear with conductors for protective earthing by tracks on printed circuit boards

If a printed circuit board track is used for earthing internally, in the independent, built-in or integral lamp controlgear, it shall withstand the following test.

AVA Documents
Document Sharing Hub

A current from an a.c. source of 25 A is passed for 1 min between the earthing terminal or earthing contact via the track on the printed circuit board and each of the accessible metal parts in turn.

After the test and after cooling the controlgear to ambient temperature, the requirements of ~~7.2.1~~ 7.2.3 of IEC 60598-1:2014 shall apply.

9.4 Earthing of built-in lamp controlgear

It is allowed to earth built-in lamp controlgear by means of fixing the controlgear to earthed metal of the luminaire.

For compliance, see 7.2 of IEC 60598-1:2014.

If a lamp controlgear has an earthing terminal, this terminal shall only be used for earthing the built-in lamp controlgear.

Earthing of the luminaire or other equipment via the built-in lamp controlgear is not allowed.

9.5 Earthing via independent controlgear

9.5.1 Earth connection to other equipment

Independent lamp controlgear may have earthing terminals that allow the onward earth connection to other equipment in the installation. For looping or through connection, the conductor shall have a minimum cross-section of 1,5 mm^2 and be of copper, or an equivalent conductive material shall be used.

Protective earthing wires within the luminaire shall be in line with 5.3.1.1 and Section 7 of IEC 60598-1:2014. For looping-through, a minimum cross section of 1,5 mm^2 is required.

Compliance is checked by inspection and measurement.

9.5.2 Earthing of the lamp compartments powered via the independent lamp controlgear

Independent lamp controlgear may have earthing terminals that allow the earthing of the lamp compartment, which are powered by this controlgear. In this case, the earth path between the input and output earth terminals of the controlgear shall withstand the following test.

A current from an a.c. source of 25 A is passed for 1 min between the earthing terminal or earthing contact (via the track on the printed circuit board, if used for protective earth) and each of the accessible metal parts in turn.

After the test and after cooling the control gear at ambient temperature, a current of at least 10 A, derived from the source with a no-load voltage not exceeding 12 V, shall be passed between the earthing terminal or earthing contact and each of the accessible metal parts in turn. The voltage drop between the earthing terminal or earthing contact and the accessible metal part shall be measured and the resistance shall be calculated from the current and the voltage drop. In no case shall the calculated resistance value exceed 0,5 Ω.

The output earthing terminals to the lamp compartment shall be marked as described in 7.1 t).

Documents
Document Sharing Hub
Full document details: IEC 61347-1 2015 RLV

10 Protection against accidental contact with live parts

10.1 Lamp controlgear which do not rely upon the luminaire enclosure for protection against electric shock shall be sufficiently protected against accidental contact with live parts (see Annex A) when installed as in normal use.

Integral lamp controlgear, which relies upon the luminaire enclosure for protection, shall be tested according to its intended use.

Lacquer or enamel is not considered to be adequate protection or insulation for the purpose of this requirement.

Parts providing protection against accidental contact shall have adequate mechanical strength and shall not work loose in normal use. It shall not be possible to remove them without the use of a tool.

Compliance is checked by inspection and by a manual test, and with regard to protection against accidental contact, by means of the test finger as shown in Figure 1 of IEC 60529:1989 using an electrical indicator to show contact. This finger is applied in all possible positions, if necessary, with a force of 10 N.

It is recommended that a lamp be used for the indication of contact and that the voltage be not less than 40 V.

10.2 Lamp controlgear incorporating capacitors of total capacitance exceeding 0,5 μF shall be constructed so that the voltage at the lamp controlgear terminations does not exceed 50 V, 1 min after disconnection of the lamp controlgear from a source of supply at rated voltage.

10.3 For controlgears providing SELV, the accessible conductive parts shall be electrically separated from live parts by at least double or reinforced insulation. There shall be no connection between the output circuit and the body or the protective earthing circuit, if any. Moreover, the construction shall be such that there is no possibility of any connection between these circuits, either directly or indirectly, through other conductive parts, except by deliberate action (see 10.4).

SELV output circuits shall be electrically separated from earth by at least basic insulation.

The expression “circuits” also covers windings of internal transformers (HF and others) of the controlgear.

In controlgears providing ELV, conductive parts are regarded as live parts and shall be insulated accordingly.

Compliance is checked by inspection, relevant insulation tests and measurements. See also Annex L.

10.4 Controlgears providing SELV may have accessible conductive parts in the SELV circuit; if: the rated output voltage under load does not exceed 25 V r.m.s. or 60 V d.c. ripple free d.c. where the voltage exceeds 25 V r.m.s. or 60 V ripple free d.c., the touch current does not exceed:

– for a.c.: 0,7 mA (peak);
– for d.c.: 2,0 mA;
– the no-load output does not exceed 35 V peak or 60 V ripple free d.c.

NOTE The limits given are based on IEC 60364-4-41.

Documents
Document Sharing Hub

Full document details: IEC 61347-1 2015 RLV

Compliance is checked by measuring the output voltage when steady conditions are established, the controlgear being connected to rated supply voltage and rated frequency. For the test under load, the controlgear is loaded with a resistance which would give rated output (current or wattage respectively) at rated output voltage. For controlgears with more than one supply voltage, the requirements are applicable for each of the rated supply voltages.

The touch current is checked by measurement in accordance with Annex G from IEC 60598-1:2014.

For controlgears providing SELV with rated output voltages or currents exceeding the values given above at least one of the conductive parts in the SELV circuit shall be insulated by insulation capable of withstanding a test voltage of 500 V r.m.s. for 1 min.

Accessible conductive parts separated by double or reinforced insulation, e.g. live parts and the body or primary and secondary circuits, may be bridged (conductive bridged) by resistors or Y2 capacitors provided they consists of at least two separate components of the same rated value (resistance or capacitance) and are rated for the total working voltage and whose impedance is unlikely to change significantly during the individual lifetime of the controlgear. In addition, accessible conductive parts separated by double or reinforced insulation from live parts, as above, may be bridged by a single Y1 capacitor.

Y1 or Y2 capacitors shall comply with relevant requirements of IEC 60384-14 and if resistors are used they shall comply with the requirements of test a) in 14.1 of IEC 60065:2001.

11 Moisture resistance and insulation

Lamp controlgear shall be moisture-resistant. They shall not show any appreciable damage after being subjected to the following test.

The lamp controlgear is placed in the most unfavourable position of normal use, in a humidity cabinet containing air with a relative humidity maintained between 91 % and 95 %. The temperature of the air at all places where samples can be located shall be maintained within 1 °C of any convenient value *t* between 20 °C and 30 °C.

Before being placed in the humidity cabinet, the sample is brought to a temperature between t and (t + 4) °C. The sample shall be kept in the cabinet for 48 h.

~~NOTE~~ In most cases, the sample may be brought to the specified temperature between *t* and (*t* + 4) °C by keeping it in a room at this temperature for at least 4 h before the humidity treatment.

In order to achieve the specified conditions within this cabinet, it is necessary to ensure constant circulation of the air within, and, in general, to use a cabinet which is thermally insulated.

~~*Before the insulation test, visible drops of water, if any, are removed by means of blotting paper.*~~

~~*Immediately after the moisture treatment, the insulation resistance shall be measured with a d.c. voltage of approximately 500 V, 1 min after application of the voltage. Lamp controlgear having an insulating cover or envelope shall be wrapped with metal foil.*~~

Insulation resistance shall be not less than 2 MΩ for basic insulation and 4 MΩ for double or reinforced insulation between live parts and the body. For insulation between primary and secondary circuits, in controlgear providing SELV, other values apply (see Annex L).

Insulation shall be adequate

Documents
Document Sharing Hub
Full document details: IEC 61347-1 2015 RLV

~~a) between live parts of different polarity which are or can be separated;~~

a) between live parts and outer metal parts, including fixing screws and metal foil in contact with outer insulating parts;

~~b) between live parts and external parts, including fixing screws;~~

b) between live parts and control terminals, where relevant.

In the case of lamp controlgear having an internal connection or component between one or more output terminals and the earth terminal, such a connection shall be removed during this test.

For the test the input and output terminals shall be bonded together. Controlgear, having insulation cover or envelope is wrapped with metal foil.

12 Electric strength

Lamp controlgear shall have adequate electric strength.

Immediately after the measurement of the insulation resistance, the lamp controlgear shall withstand an electric strength test for 1 min applied between the parts specified in Clause 11.

The test voltage of substantially sine-wave form, having a frequency of 50 Hz or 60 Hz shall correspond to the values in Table ~~1~~ 3. Initially, not more than half the specified voltage shall be applied, the voltage then being raised rapidly to the prescribed value.

Table ~~1~~ 3 – Electric strength test voltage

Working voltage *U*		Test voltage V
Basic insulation for voltages of SELV		500
Up to and including ~~42~~ 50 V		500
Above ~~42~~ 50 V up to and including 1 000 V	Basic insulation	2 *U* + 1 000
	Supplementary insulation	2 *U* + ~~1 750~~ 1 000
	Double or reinforced insulation	4 *U* + ~~2 750~~ 2 000
Where both reinforced insulation and double insulation are used, care shall be taken that the voltage applied to the reinforced insulation does not overstress the basic insulation or the supplementary insulation. When testing the controlgear, the input should be tested with a test voltage which corresponds with the supply voltage and the output related part should be tested with a test voltage which corresponds with U_{out}.		

For solid or thin sheet insulation used for double or reinforced insulation Annex N applies.

No flashover or breakdown shall occur during the test.

The high-voltage transformer used for the test shall be so designed that when the output terminals are short-circuited after the output voltage has been adjusted to the appropriate test voltage, the output current is at least 200 mA.

The overcurrent relay shall not trip when the output current is less than 100 mA.

The r.m.s. value of the test voltage applied shall be measured to within ±3 %.

The metal foil referred to in Clause 11 shall be placed so that no flashover occurs at the edges of the insulation.

Documents
Document Sharing Hub
Full document details: IEC 61347-1 2015 RLV

Glow discharges without drop in voltage are neglected.

13 Thermal endurance test for windings of ballasts

Windings of ballasts shall have adequate thermal endurance.

Compliance is checked by the following test.

For windings included in controlgears providing SELV, see modifications specified in IEC 61558-1:2005, Annex U.

The purpose of this test is to check the validity of the rated maximum operating temperature (t_w) marked on the ballast. The test is carried out on seven new ballasts which have not been subjected to the preceding tests. They shall not be used for further testing.

This test may also be applied to ballasts which form an integral part of a luminaire and which cannot be tested separately, thereby enabling such integral ballasts to be made with a t_w value.

Before the test, each ballast shall start and operate a lamp normally, and the lamp arc current shall be measured under normal conditions of operation and at a rated voltage. Details of the thermal endurance test are prescribed below. The thermal conditions shall be so adjusted that the objective duration of the test is as indicated by the manufacturer. If no indication is given, the test period shall be 30 days.

The test is carried out in an appropriate oven.

The ballast shall function electrically in a manner similar to that in normal use, and, in the case of capacitors, components or other auxiliaries not subjected to the test, these shall be disconnected and reconnected again in the circuit but outside the oven. Other components which do not influence the operating conditions of the windings may be removed.

~~NOTE 1~~ Where it is necessary to disconnect capacitors, components or other auxiliaries, it is recommended that the manufacturer supplies special ballasts with these parts removed and any necessary additional connections brought out from the ballast.

In general, to obtain normal operating conditions, the ballast is tested with the appropriate lamp.

The ballast container, if of metal, is earthed. Lamps are always kept outside the oven.

For certain inductive ballasts of simple impedance (for example, switch-start choke ballasts), the test is made without a lamp or resistor, provided the current is adjusted to the same value as found with the lamp at rated supply voltage.

The ballast is connected to the power supply so that the voltage stress between the lamp controlgear winding and earth is similar to the one in the lamp method.

Seven ballasts are placed in the oven, and the rated supply voltage applied to each of the circuits.

The oven thermostats are then regulated so that the internal temperature of the oven attains a value such that the temperature of the hottest winding in each of the ballasts is approximately equal to the theoretical value given in Table ~~2~~ 4.

Documents
Document Sharing Hub
Full document details: IEC 61347-1 2015 RLV

For ballasts subject to a test duration longer than 30 days, the theoretical test temperatures shall be calculated by means of Equation (2)~~ as explained in Note 3 of this clause~~.

After 4 h, the actual temperature of the winding is determined by the "change-in-resistance" method, and, if necessary, the oven thermostats are readjusted to approximate as closely as possible the desired test temperature. Thereafter, a daily reading of the air temperature in the oven is taken to ensure that the thermostats are maintained at the correct value to within ±2 °C.

The winding temperatures are measured again after 24 h and the final test period for each lamp controlgear is determined from Equation (2). Figure 1 illustrates this in graphical form. The permissible difference between the actual temperature of the hottest winding of any of the ballasts under test and the theoretical value shall be such that the final test period is at least equal to, but not more than twice, the foreseen test period.

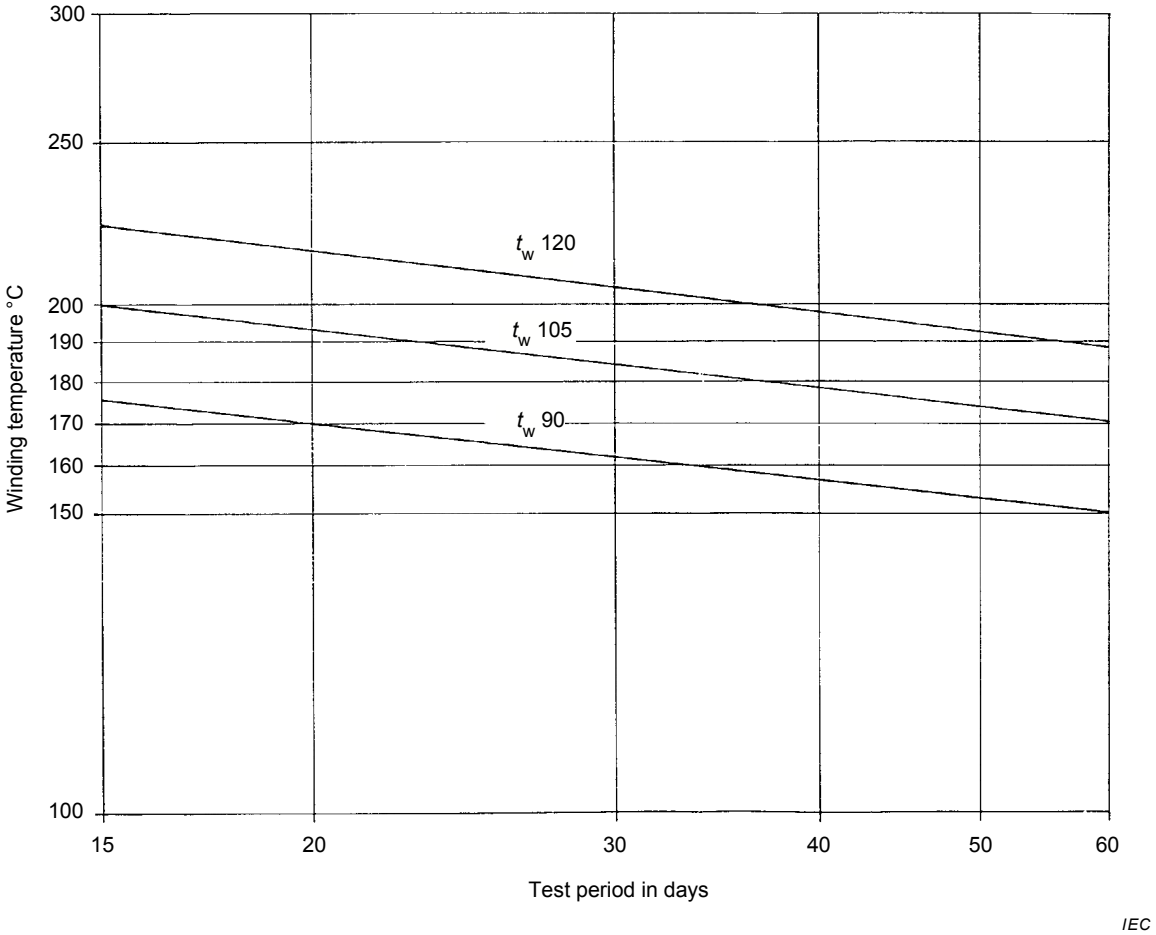

NOTE These curves are for information only and illustrate Equation (2) using a constant *S* of 4 500 (see Annex E).

Figure 1 – Relation between winding temperature and endurance test duration

Documents
Document Sharing Hub
Full document details: IEC 61347-1 2015 RLV

Table ~~2~~ 4 – Theoretical test temperatures for ballasts subjected to an endurance test duration of 30 days

Constant *S*		Theoretical test temperature °C					
		***S*4,5**	***S*5**	***S*6**	***S*8**	***S*11**	***S*16**
For t_w =	90	163	155	142	128	117	108
	95	171	162	149	134	123	113
	100	178	169	156	140	128	119
	105	185	176	162	146	134	125
	110	193	183	169	152	140	130
	115	200	190	175	159	146	136
	120	207	197	182	165	152	141
	125	215	204	189	171	157	147
	130	222	211	196	177	163	152
	135	230	219	202	184	169	158
	140	238	226	209	190	175	163
	145	245	233	216	196	181	169
	150	253	241	223	202	187	175

~~NOTE~~ Unless otherwise indicated on the ballast, the theoretical test temperatures specified in column *S*4,5 apply. The use of a constant other than *S*4,5 ~~must~~ shall be justified in accordance with Annex E.

~~NOTE 2~~ For the measurement of winding temperature by the "change-in-resistance" method, the following Equation (1) is applicable:

$$t_2 = \frac{R_2}{R_1}(234{,}5 + t_1) - 234{,}5 \qquad (1)$$

where

t_1 is the initial temperature in degrees Celsius;

t_2 is the final temperature in degrees Celsius;

R_1 is the resistance at temperature t_1;

R_2 is the resistance at temperature t_2.

The constant 234,5 relates to copper windings; for aluminium, this constant should be 229.

No attempt shall be made to hold the winding temperature constant after the measurement taken after 24 h. Only the ambient air temperature shall be stabilized by the thermostatic control.

The test period for each ballast starts from the time the ballast is connected to the supply. At the end of its test, the relevant ballast is disconnected from the supply but is not removed from the oven until the tests on the other ballast have been completed.

~~NOTE 3~~ The theoretical test temperatures given in Figure 1 correspond to a working life of 10 years' continuous operation at the rated maximum operating temperature t_w.

Documents
Document Sharing Hub

They are computed using the following equation:

$$\log L = \log L_o + S\left(\frac{1}{T} - \frac{1}{T_w}\right) \quad (2)$$

where

L is the objective endurance test life in days (30, 60, 90 or 120);

L_o equals 3 652 days (10 years);

T is the theoretical test temperature in kelvins ($t + 273$);

T_w is the rated maximum operating temperature in kelvins ($t_w + 273$);

S is the constant depending on the design of the lamp controlgear and the winding insulation used.

After the test, when the ballasts have returned to room temperature, they shall satisfy the following requirements.

a) At rated voltage, the ballast shall start the same lamp and the lamp arc current shall not exceed 115 % of the value measured before the test, as described above.

~~NOTE 4~~ This test is to determine any adverse change in the ballast setting.

b) The insulation resistance between the winding and the ballast case, measured at approximately 500 V d.c. shall be not less than 1 MΩ.

The result of the test is considered to be satisfactory if at least six of the seven ballasts satisfy these requirements. The test is considered to have failed if more than two ballasts fail the test.

In the case of two failures, the test is repeated with seven more ballasts and no failure of these is permitted.

14 Fault conditions

14.1 Lamp controlgear shall be so designed that, when operated under fault conditions, there shall be no emission of flames or molten material or production of flammable gases. The protection against accidental contact in accordance with 10.1 shall not be impaired.

Operation under fault conditions denotes that each of the conditions specified in 14.2 to 14.5 is applied in turn and, associated with it, those other fault conditions which are a logical consequence thereof, with the provision that only one component at a time should be subjected to a fault condition.

If a lamp controlgear marked with a protective earthing symbol and the manufacturer declared in the instructions that the use of the controlgear without earthing contact is permitted then the operation under fault conditions shall be made with and without earthing connection.

If a lamp controlgear marked with a functional earthing symbol and the manufacturer declared in the instructions that the use of the controlgear without functional earthing contact is permitted then the operation under fault conditions shall be made with and without earthing connection.

Examination of the apparatus and its circuit diagram will generally show the fault conditions which should be applied. These are applied in sequence in the order which is most convenient.

Documents
Document Sharing Hub
Full document details: IEC 61347-1 2015 RLV

~~Totally enclosed lamp controlgear or components shall not be opened for examination nor for the application of internal fault conditions. However, in case of doubt, in conjunction with the examination of the circuit diagram, either the output terminals shall be short-circuited or, in agreement with the manufacturer, a specially prepared lamp controlgear shall be submitted for testing.~~

~~A lamp controlgear or component is considered to be totally enclosed if it is encapsulated in a self-hardening compound bonded to the relevant surfaces so that clearances in air do not exist.~~

~~Components in which, according to the manufacturer's specifications, a short circuit cannot occur, or which eliminate a short circuit, shall not be bridged. Components in which, according to the manufacturer's specification, an open circuit cannot occur shall not be interrupted.~~

The intention of Clause 14 is to check if the controlgear remains safe if a single fault occurs in the controlgear. To that extend each component shall be short-circuited or opened and PCB tracks closer together than required according to Clause 16 of this standard shall be short-circuited. The requirement is that the controlgear shall not cause harm to persons or goods. Safety components which comply with their own safety standard are excluded if they are used within their specifications.

With this test, evidence will be given that the controlgear will be safe under any single fault condition.

Filter capacitors directly connected to the mains supply do not need to be tested if they comply with IEC 60384-14 and are classified X1 or X2 for the relevant voltage.

The manufacturer shall show evidence that the components behave in the foreseen way, for example by showing compliance with the relevant specification.

Capacitors, resistors or inductors not complying with a relevant standard shall be short-circuited or disconnected, whichever is the more unfavourable.

For lamp controlgear marked with , the lamp controlgear case temperature at any place shall not exceed the marked value.

~~NOTE~~ Lamp controlgear and filter coils without these symbols are checked together with the luminaire in accordance with IEC 60598-1.

14.2 Short circuit across creepage distances and clearances, if less than the values specified in Clause 16, taking into account any reduction allowed in 14.2 to 14.5.

~~NOTE 1~~ Creepage and clearances distances below the values of Clause 16 are not allowed between live parts and accessible metal parts and between different circuits. This requirement is also applicable between tracks of printed circuit board.

Between conductors protected from surge energy from the supply (for example, by choke winding or capacitor) which are on a printed board complying with the pull-off and peel strength requirements specified in IEC 61189-2, the creepage distance requirements are modified according to Table 5 with a minimum of 0,5 mm. ~~The distances of Table 3 are replaced by the values calculated from the following equation:~~

$$\cancel{\log d = 0{,}78 \log \frac{\hat{V}}{300}} \qquad \cancel{(3)}$$

~~with a minimum of 0,5 mm,~~

Documents
Document Sharing Hub

~~where~~

~~*d* is the distance, in millimetres;~~

~~$\hat{V}$ is the peak value of the voltage in volts.~~

~~These distances can be determined by reference to Figure 2.~~

~~NOTE 2 Coverings of lacquer or the like on printed circuit boards are ignored when calculating the distances.~~

~~Creepage distances of printed circuit boards may have lower values than described above if coating according to IEC 60664-3 is used. This applies also for creepage distances between live parts and parts which are connected to accessible metal parts. Tests according to the relevant clauses of IEC 60664-3 shall show compliance with the requirement.~~

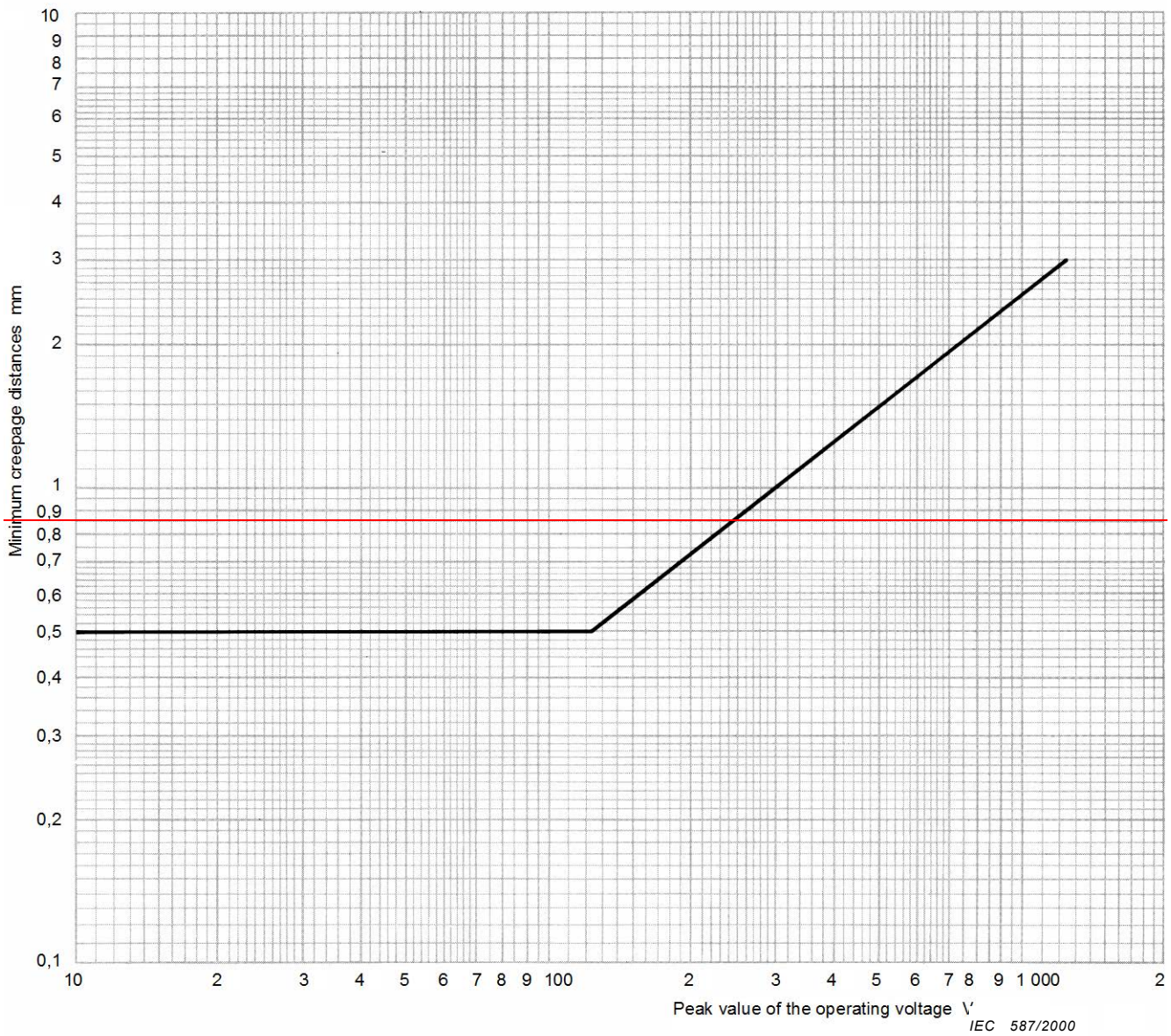

~~**Figure 2 – Creepage distances between conductors on printed boards not conductively connected to the supply mains**~~

Documents
Document Sharing Hub
Full document details: IEC 61347-1 2015 RLV

Table 5 – Minimum creepage distance on printed circuit board

Voltage (rms) V	Creepage distance mm
50	0,5
100	0,5
160	0,5
200	0,63
250	1,0
320	1,6
400	2,0
500	2,5
630	3,2
800	4,0
1 000	5,0

NOTE 1 The values of this table have been taken from Table F.4 of IEC 60664-1:2007 – minimum creepage distances for printed wiring material – pollution degree 2 (all material groups except III b).

NOTE 2 Values for creepage distances can be found, for intermediate values of working voltages, by linear interpolation between tabulated values.

NOTE 3 For creepage distances, the equivalent d.c. voltage is equal to the r.m.s. value of the sinusoidal a.c. voltage.

14.3 Short circuit across or, if applicable, interruption of semi-conductor devices.

Only one component at a time shall be short-circuited (or interrupted).

14.4 Short circuit across insulation consisting of covering of lacquer, enamel or textile.

Such coverings are ignored in assessing the creepage distances specified in Table 7 and clearances specified in Table ~~3~~ 9. However, if enamel forms the insulation of a wire and withstands the voltage test prescribed in Clause 13 of IEC 60317-0-1:2013, it is considered as contributing 1 mm to those creepage distances and clearances in air.

This subclause does not imply a need to short-circuit the insulation between turns of coils, insulating sleeves or tubing.

14.5 Short circuit across electrolytic capacitors.

14.6 Compliance ~~is~~ with 14.2 to 14.5 shall be checked by operating the lamp controlgear at ~~any voltage between 0,9 and 1,1 times~~ the rated supply voltage according to the test circuit procedure given in 14.7, with the lamp(s) connected and the lamp controlgear case at t_c. Each of the fault conditions outlined in 14.2 to 14.5 inclusive shall be then applied in turn.

For the purpose of this clause the test voltage may be at any value within the supply voltage range of the control gear, or within ± 5% where only single rated supply voltage is given. This is to allow the high supply current capacity required for this test.

The tests shall be carried out on three samples for each fault condition, consisting of one or more items submitted for the purpose of the type test. If one of the samples fails, the test shall be repeated with three new samples none of which shall fail.

Documents
Document Sharing Hub

The test ~~is~~ shall be continued until stable conditions are obtained. The lamp controlgear case temperature ~~is~~ shall then be measured.

NOTE ~~When making the tests of 14.1 to 14.4,~~ Components such as resistors, capacitors, semiconductors, fuses, etc. ~~may~~ could fail. Such components can be replaced so as to continue the test.

Insulation shall be adequate between input and output terminals bonded together, and all exposed metal parts and the control terminals, where relevant. Controlgear, having insulation cover or envelope is wrapped with metal foil.

After the tests, when the lamp controlgear has returned to ambient temperature, the insulation resistance measured at approximately 500 V d.c. shall be not less than 1 MΩ.

To check whether gases liberated from component parts are flammable or not, a test with a high-frequency spark generator ~~is~~ shall be made.

Accessible parts shall be tested in accordance with Annex A to determine whether they have become live.

To check whether emission of flames or molten material might present a safety hazard, the test specimen ~~is~~ shall be wrapped with a tissue paper, as defined in 4.187 of ISO 4046-4:2002, and the latter shall not ignite.

14.7 Connect the controlgear under test to a high-power a.c. supply capable of passing a fault current of 160 A $^{-0}_{+10}$ % r.m.s., as shown in Figure 2. Apply the relevant fault condition.

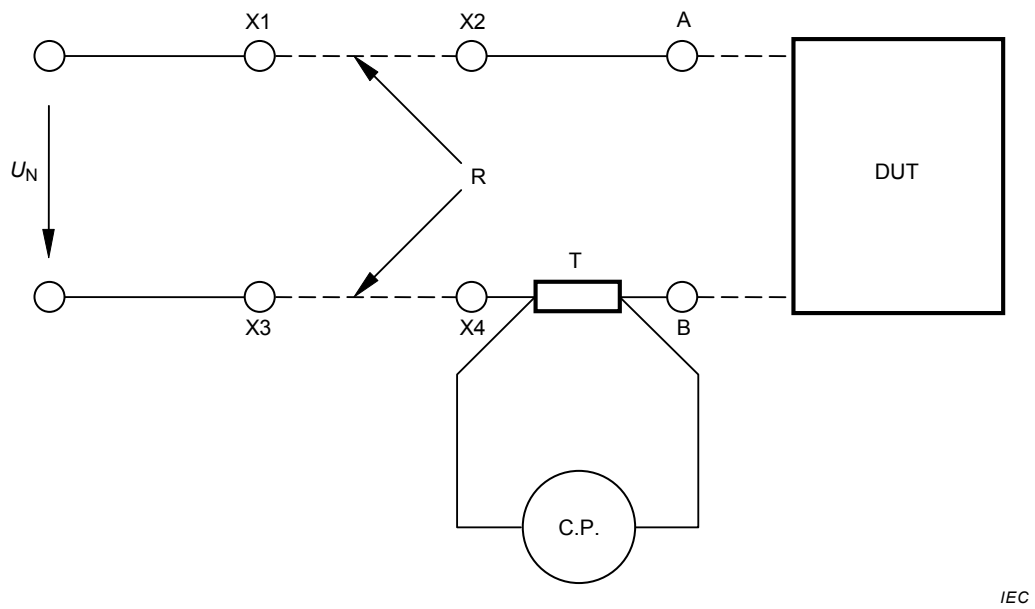

Key

U_N	supply voltage
DUT	device under test
R	additional wiring or resistor for current tuning
T	shunt 10 mΩ
X1, X2, X3, X4	terminals for the additional wiring or resistor
A, B	terminals for the short circuit and the lamp controlgear
C.P.	current probe

Figure 2 – Test circuit for controlgear

Documents
Document Sharing Hub
Full document details: IEC 61347-1 2015 RLV

Carry out the test procedure as follows.

a) Short circuit terminals A and B.

Test current calibration with additional wire or resistor between the terminals X1 – X2 and X3 – X4. Current value shall be 160 A $^{-0}_{+10}$ % r.m.s..

b) Remove the short circuit.

Connect the controlgear to terminals A and B.

c) Test the controlgear.

15 Construction

15.1 Wood, cotton, silk, paper and similar fibrous material

Wood, cotton, silk, paper and similar fibrous material shall not be used as insulation, unless impregnated.

Compliance is checked by inspection.

15.2 Printed circuits

Printed circuits are permitted for internal connections.

Compliance is checked by reference to Clause 14 of this standard.

15.3 Plugs and socket-outlets used in SELV or ELV circuits

For controlgears providing SELV or ELV socket-outlets, the output circuit shall be such that there is no dangerous compatibility between such a socket-outlet and a plug intended for direct connection to a socket-outlet which could be used for the input circuit in relation to installation rules, voltages and frequencies.

Plugs and socket-outlets for SELV system shall comply with the requirements of IEC 60906-3 and IEC 60884-2-4. However, plugs and socket-outlets for SELV systems with both a rated current ~ 3 A and a maximum voltage of 25 V a.c. or 60 V d.c. with a power not exceeding 72 W are allowed to comply only with the following requirements:

– plugs shall not be able to enter socket-outlets of other standardised systems;
– socket-outlets shall not admit plugs of other standardised voltage systems;
– socket-outlets shall not have a protective earth contact.

As IEC 60906-3 covers only 6 V, 12 V, 24 V and 48 V output voltage, controlgear with intermediate output voltages shall be able to withstand the nearest upper voltage.

15.4 Insulation between circuits and accessible parts

15.4.1 General

Controlgear shall provide suitable insulation between different electrical circuits and to accessible parts.

The same requirements apply to the circuits connected to the control interface of a controllable electronic controlgear where the control circuits shall be isolated from the LV supply according to the declaration of the controlgear manufacturer (see 7.1 k)).

No insulation is required where:

Documents
Document Sharing Hub
Full document details: IEC 61347-1 2015 RLV

– control signals are injected via the supply terminals or circuits connected to the supply via a separate terminal;
– control signal receiver is located in the ballast case and the signal is transmitted remotely via infra-red or radio wave transmitters;
– control terminals are only to be used together with one sensing device outside of the controlgear case, but inside the luminaire (not remotely).

NOTE At present on the market the following types of control systems are available:
– FELV control signal, basic insulated to LV supply (e.g. Digital Addressable Lighting Interface and 0 to 10 V);
– SELV control signal, (e.g. DMX);
– control signal, not insulated to LV supply (e.g. Push button control/phase cut/step dim).

Compliance is checked by the following requirements.

15.4.2 SELV circuits

The following sources may be used to supply SELV circuits:

– a safety isolating transformer in accordance with IEC 61558-2-6 or equivalent Part 2 of IEC 61558;
– a controlgear providing SELV in accordance with IEC 61347-2-2, IEC 61347-2-3, IEC 61347-2-7, IEC 61347-2-13;
– an electrochemical source (e.g. a battery) or another source independent of a higher voltage circuit.

The voltage in the circuits shall not be higher than the limits defined for ELV.

SELV circuits shall be insulated from the LV supply by double or reinforced insulation (based upon a working voltage across the insulation).

SELV circuits shall be insulated from other non SELV circuits (except FELV) by double or reinforced insulation (based upon a working voltage equal to highest voltage in the circuits).

SELV circuits shall be insulated from FELV circuits by supplementary insulation (based upon a working voltage equal to LV supply voltage).

SELV circuits shall be insulated from other SELV circuits by basic insulation (based upon a working voltage equal to highest voltage in the circuits).

SELV circuits shall be insulated from accessible conductive parts by insulation according to Table 6 in 15.4.5.

In cases of a controlgear providing SELV according to this standard, the SELV voltage shall be considered for insulating purpose as the maximum output voltage indicated as "U_{OUT}"

Compliance is checked by inspection and by the tests required in Clause 10, 11, 12 and 16 of this standard.

15.4.3 FELV circuits

The following sources may be used to supply FELV circuits:

– a separating transformer in accordance with IEC 61558-2-1 or equivalent Part 2 of IEC 61558;
– a separating controlgear providing basic insulation between input and output circuits in accordance with the relevant Part 2 of this standard;

Documents
Document Sharing Hub
Full document details: IEC 61347-1 2015 RLV

– an electrochemical source (e.g. a battery) or another source in circuit separated by the LV supply by basic insulation only.

The voltage in the circuits shall not be higher than the limits defined for ELV.

FELV circuits shall be insulated from the LV supply by at least basic insulation (based upon a working voltage equal to LV supply voltage).

It is not required that FELV circuits shall be insulated from other FELV circuits except for functional purpose.

FELV circuits shall be insulated from accessible conductive parts by an insulation according to Table 6 in 15.4.5.

Compliance is checked by inspection and by the tests required in Clause 10, 11, 12 and 16 of this standard.

Plugs and socket-outlets for FELV systems shall comply with the following requirements:

– plugs shall not be able to enter socket-outlets of other voltage systems;
– socket-outlets shall not admit plugs of other voltage systems;
– socket-outlets shall have a protective conductor contact.

Compliance is checked by inspection.

15.4.4 Other circuits

The insulation between circuits other than SELV or FELV and accessible conductive parts shall be in accordance with the requirements in Table 6 of 15.4.5.

Compliance is checked by applying the requirements of this standard to the insulation required in 15.4.5.

NOTE Example of this kind of circuits are:

– output circuits of ballast;
– circuits supplied by isolating transformer according to IEC 61558-2-4 or equivalent;
– circuits supplied by separating transformers according to IEC 61558-2-1 which do not fulfil the requirements for FELV;
– circuits supplied by separating controlgear (other than FELV) and isolating controlgear according with IEC 61347-2-2, IEC 61347-2-3, IEC 61347-2-7, IEC 61347-2-13.

15.4.5 Insulation between circuits and accessible conductive parts

Accessible conductive parts shall be insulated from active parts of electric circuit by an insulation according to Table 6. Figure 3 gives an example of a controlgear insulation related to explanation in Table 6.

In class II construction, where equipotential bonding is used for the protection against indirect contacts with live parts, the following requirements are applicable.

– All conductive parts are connected together so that two failures of the insulation result in a short circuit.
– To check whether the conductive parts are reliably connected together, the test of IEC 60598-1:2014, 7.2.3 (earth continuity test with 10 A) has to be carried out.
– The conductive parts comply with the requirements of Annex A of this standard in case of insulation fault between live parts and accessible conductive parts.

Documents
Document Sharing Hub

Full document details: IEC 61347-1 2015 RLV

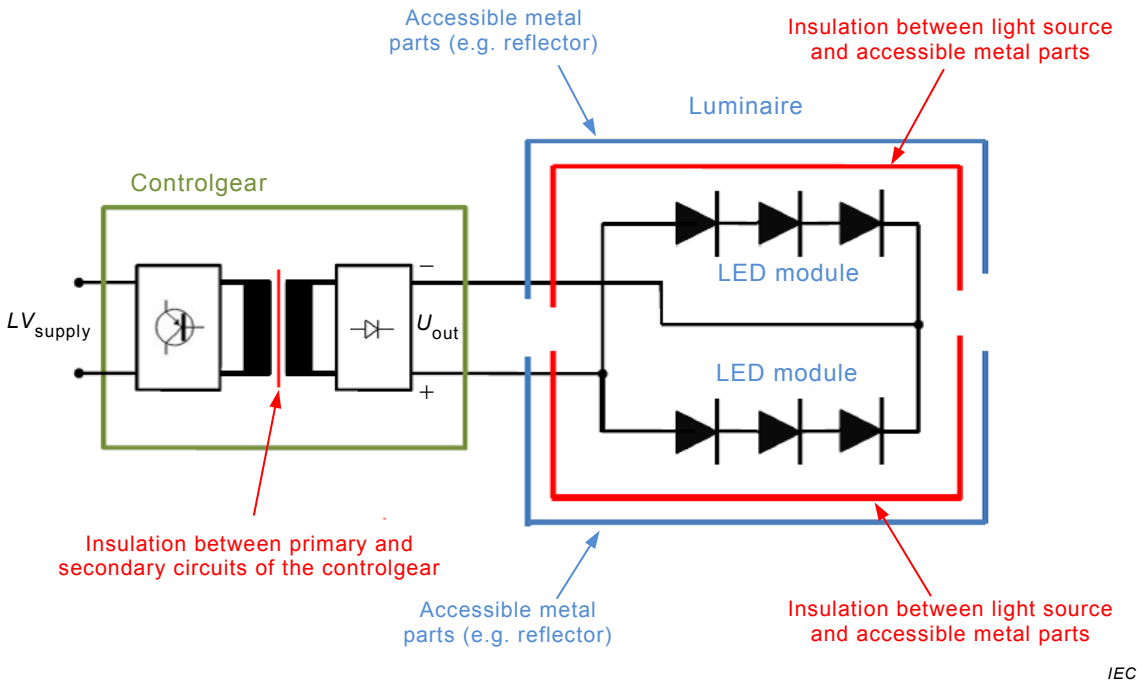

Figure 3 – Example of a controlgear insulation related to Table 6

Documents
Document Sharing Hub
Full document details: IEC 61347-1 2015 RLV

Table 6 – Insulation requirements between active parts and accessible conductive parts

Controlgear			Required Insulation between active parts and accessible conductive parts		
			Class I	**Class II**	**Class II**
Insulation between LV supply and secondary circuits		Output voltage	Insulation of accessible earthed conductive parts	Insulation of one accessible conductive part or more than one with equipotential bonding	Insulation of more than one accessible conductive parts without equipotential bonding
[SOURCE: 60417-5941 (2002-10)]	**none**	$U_{out} > LV_{supply}$	Basic insulation complying with U_{out}	Double or reinforced insulation complying with U_{out}	Double or reinforced insulation complying with U_{out}
		$U_{out} \leq LV_{supply}$	Basic insulation complying with LV_{supply}	Double or reinforced insulation complying with LV_{supply}	Double or reinforced insulation complying with LV_{supply}
[SOURCE: 60417-5156 (2003-08)]	**basic**	Voltages above ELV (FELV)	Basic insulation complying with U_{out}	Supplementary insulation complying with U_{out} plus LV_{supply}	Insulation has to fulfil the higher requirement of a) or b): a) Supplementary insulation complying with U_{out} plus $LV_{primary}$ b) Double or reinforced insulation complying with U_{out}
		ELV (FELV)	Functional insulation	Supplementary insulation complying with U_{out} plus LV_{supply}	Supplementary insulation complying with U_{out} plus LV_{supply}
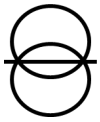 [SOURCE: 60417-5221 (2002-10)]	**double or rein-forced**	Voltages above ELV (FELV)	Basic insulation complying with U_{out}	Basic insulation complying with U_{out}	Double or reinforced insulation complying with U_{out}
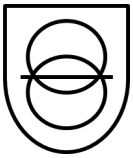 [SOURCE: 60417-5222 (2002-10)]		ELV (SELV)	Basic insulation See also requirements in IEC 60598-1:2014, Sections 8, 10 and 11	Basic insulation See also requirements in IEC 60598-1:2014, Sections 8, 10 and 11	Basic insulation See also requirements in IEC 60598-1:2014, Sections 8, 10 and 11

16 Creepage distances and clearances

16.1 General

~~Creepage distances and clearances shall be not less than the values given in Tables 3 and 4, as appropriate, unless otherwise specified in Clause 14.~~

~~The contribution to the creepage distance of any groove less than 1 mm wide shall be limited to its width.~~

AVA Documents
Document Sharing Hub

~~Any air gap of less than 1 mm shall be ignored in computing the total air path.~~

This clause specifies minimum requirements for creepage distances (see 16.2) and clearances (see 16.3) for lamp controlgear. Exemptions are only specified in Clause 14. Additional requirements for SELV are given in Annex L.

The requirements for creepage distances and clearances have to be applied:

for basic insulation:

– between live parts of different polarity;
– between live parts and accessible earthed metal parts;
– between circuits requiring isolation from each other (e.g. FELV circuits);
– between accessible conductive parts and a metal rod of the same diameter as the flexible cable or cord (or a metal foil wrapped around the cord) inserted inside inlet bushing, anchorage and the like;
– between live part and an intermediate conductive part;
– between an intermediate conductive part and the body;

for double or reinforced insulation:

– for lamp controlgear declared not to rely on the luminaire enclosure for protection against electric shock – between live parts and the outer accessible surface of insulating parts;
– between live parts and accessible unearthed metal parts;
– between circuits requiring isolation from each other (e.g. SELV circuits).

A metal enclosure shall have an insulating lining in accordance with IEC 60598-1 if, in the absence of such a lining, the creepage distance or clearance between the live parts and the enclosure would be smaller than the value prescribed in the relevant tables.

Reductions for creepage distances and clearances are allowed for lamp controlgear which are protected against pollution by the use of coating or potting. In this case pollution degree 1 applies.

The minimum dimensions and verification tests are given in Annex P.

Creepage distances and clearances shall be measured on uncoated products.

Distances which provide basic insulation for the same circuit between live parts of different polarities on printed circuit boards are exempt from the requirements of this subclause, because they are tested according to Clause 14.

Values for creepage distances and clearance given in this subclause are the absolute minimum. Exemptions for PCB are given in Clause 14.

NOTE 1 The minimum creepage distances and clearances specified are based on the following parameters:

– for use with up to 2 000 m above sea level;
– pollution degree 2 where normally only non-conductive pollution occurs but occasionally a temporary conductivity caused by condensation is to be expected;
– equipment of impulse withstand category II which is energy-consuming equipment to be supplied from the fixed installation.

NOTE 2 The way in which creepage distances and clearances are measured is specified in IEC 60664-1.

NOTE 3 The calculation method and the structure of the creepage distances and clearances are taken from IEC 60664-1:2007 and IEC 60664-4:2005.

Documents
Document Sharing Hub

Full document details: IEC 61347-1 2015 RLV

For details of pollution degrees or impulse withstand categories, IEC 60664-1 should be consulted.

NOTE 4 Under Annex M of this standard, information about values for impulse withstand category III are presented.

NOTE 5 Creepage distances are distances in air, measured along the external surface of the insulating material.

NOTE 6 Creepage distances between ballast windings are not measured because they are checked with the endurance test. This applies also to creepage distances between taps.

~~A metal enclosure shall have an insulating lining in accordance with IEC 60598-1 if, in the absence of such a lining, the creepage distance or clearance between the live parts and the enclosure would be smaller than the value prescribed in the relevant tables.~~

NOTE 7 In open-core ballast, enamel, or similar material, which forms the insulation for a wire and withstands the voltage test for grade 1 or 2 of IEC 60317-0-1:2013 (Clause 13) is judged to contribute 1 mm to the values given in Tables ~~3~~ 7 and ~~4~~ 8 of this standard between enamelled wires of different windings or from enamelled wire to covers, iron cores, etc.

However, this applies only in the situation where creepage distances and clearances are not less than 2 mm in addition to the enamelled layers.

~~Lamp controlgear, where the components are so encapsulated in a self-hardening compound bonded to the relevant surfaces that no clearances exist, are not checked.~~

~~Printed circuit boards are exempt from the requirements of this clause because they are tested according to Clause 14.~~

Documents
Document Sharing Hub

Full document details: IEC 61347-1 2015 RLV

Table 3 – Minimum distances for a.c. (50/60 Hz) sinusoidal voltages

	RMS working voltage not exceeding V					
	50	150	250	500	750	1 000
Minimum clearance mm a) between live parts of different polarity, and b) between live parts and accessible metal parts which are permanently fixed to the lamp controlgear, including screws or devices for fixing covers or fixing the lamp controlgear to its support c) for ballasts declared not to rely on the luminaire enclosure for protection against electric shock – between live parts and the outer accessible surface of insulating parts						
– Creepage distances Insulation PTI ≥ 600	0,6	1,4	1,7	3	4	5,5
< 600	1,2	1,6	2,5	5	8	10
– Clearances	0,2	1,4	1,7	3	4	5,5
c) between live parts and a flat supporting surface or a loose metal cover, if any, if the construction does not ensure that the values under b) above are maintained under the most unfavourable circumstances						
– Clearances	2	3,2	3,6	4,8	6	8

NOTE 1 PTI (proof tracking index) in accordance with IEC 60112.

NOTE 2 In the case of creepage distances to parts not energized or not intended to be earthed where tracking cannot occur, the values specified for material with PTI ≥ 600 apply for all materials (in spite of the real PTI).

For creepage distances subjected to working voltages of less than 60 s duration, the values specified for materials with PTI ≥ 600 apply for all materials.

NOTE 3 For creepage distances not liable to contamination by dust or moisture, the values specified for materials with PTI ≥ 600 apply (regardless of the real PTI).

NOTE 4 For lamp controlgear specified in IEC 61347-2-1, accessible metal parts are rigidly placed in relation to live parts.

NOTE 5 The creepage distances and clearances specified in this clause do not apply to those devices specified in IEC 61347-2-1 which comply with the dimensions specified in IEC 60155. In such instances, the requirements of that standard apply.

Table 4 – Minimum distances for non-sinusoidal pulse voltages

	Rated pulse voltage peak kV																	
	2,0	2,5	3,0	4,0	5,0	6,0	8,0	10	12	15	20	25	30	40	50	60	80	100
Minimum clearance in mm	1,0	1,5	2	3	4	5,5	8	11	14	18	25	33	40	60	75	90	130	170

For distances subjected to both sinusoidal voltage as well as non-sinusoidal pulses, the minimum required distance shall be not less than the highest value indicated in either Table 3 or 4.

Creepage distances shall be not less than the required minimum clearance.

Documents
Document Sharing Hub
Full document details: IEC 61347-1 2015 RLV