IEC 61400-13

Edition 1.1 2021-12
CONSOLIDATED VERSION

INTERNATIONAL STANDARD

NORME INTERNATIONALE

colour inside

Wind turbines –
Part 13: Measurement of mechanical loads

Éoliennes –
Partie 13: Mesurage des charges mécaniques

IEC 61400-13:2015-12+AMD1:2021-12 CSV(en-fr)

Documents
Document Sharing Hub

Full document details: IEC 61400-13-2021

THIS PUBLICATION IS COPYRIGHT PROTECTED
Copyright © 2021 IEC, Geneva, Switzerland

All rights reserved. Unless otherwise specified, no part of this publication may be reproduced or utilized in any form or by any means, electronic or mechanical, including photocopying and microfilm, without permission in writing from either IEC or IEC's member National Committee in the country of the requester. If you have any questions about IEC copyright or have an enquiry about obtaining additional rights to this publication, please contact the address below or your local IEC member National Committee for further information.

Droits de reproduction réservés. Sauf indication contraire, aucune partie de cette publication ne peut être reproduite ni utilisée sous quelque forme que ce soit et par aucun procédé, électronique ou mécanique, y compris la photocopie et les microfilms, sans l'accord écrit de l'IEC ou du Comité national de l'IEC du pays du demandeur. Si vous avez des questions sur le copyright de l'IEC ou si vous désirez obtenir des droits supplémentaires sur cette publication, utilisez les coordonnées ci-après ou contactez le Comité national de l'IEC de votre pays de résidence.

IEC Central Office
3, rue de Varembé
CH-1211 Geneva 20
Switzerland

Tel.: +41 22 919 02 11
info@iec.ch
www.iec.ch

About the IEC
The International Electrotechnical Commission (IEC) is the leading global organization that prepares and publishes International Standards for all electrical, electronic and related technologies.

About IEC publications
The technical content of IEC publications is kept under constant review by the IEC. Please make sure that you have the latest edition, a corrigendum or an amendment might have been published.

IEC publications search - webstore.iec.ch/advsearchform
The advanced search enables to find IEC publications by a variety of criteria (reference number, text, technical committee, …). It also gives information on projects, replaced and withdrawn publications.

IEC Just Published - webstore.iec.ch/justpublished
Stay up to date on all new IEC publications. Just Published details all new publications released. Available online and once a month by email.

IEC Customer Service Centre - webstore.iec.ch/csc
If you wish to give us your feedback on this publication or need further assistance, please contact the Customer Service Centre: sales@iec.ch.

IEC online collection - oc.iec.ch
Discover our powerful search engine and read freely all the publications previews. With a subscription you will always have access to up to date content tailored to your needs.

Electropedia - www.electropedia.org
The world's leading online dictionary on electrotechnology, containing more than 22 000 terminological entries in English and French, with equivalent terms in 18 additional languages. Also known as the International Electrotechnical Vocabulary (IEV) online.

A propos de l'IEC
La Commission Electrotechnique Internationale (IEC) est la première organisation mondiale qui élabore et publie des Normes internationales pour tout ce qui a trait à l'électricité, à l'électronique et aux technologies apparentées.

A propos des publications IEC
Le contenu technique des publications IEC est constamment revu. Veuillez vous assurer que vous possédez l'édition la plus récente, un corrigendum ou amendement peut avoir été publié.

Recherche de publications IEC - webstore.iec.ch/advsearchform
La recherche avancée permet de trouver des publications IEC en utilisant différents critères (numéro de référence, texte, comité d'études, …). Elle donne aussi des informations sur les projets et les publications remplacées ou retirées.

IEC Just Published - webstore.iec.ch/justpublished
Restez informé sur les nouvelles publications IEC. Just Published détaille les nouvelles publications parues. Disponible en ligne et une fois par mois par email.

Service Clients - webstore.iec.ch/csc
Si vous désirez nous donner des commentaires sur cette publication ou si vous avez des questions contactez-nous: sales@iec.ch.

IEC online collection - oc.iec.ch
Découvrez notre puissant moteur de recherche et consultez gratuitement tous les aperçus des publications. Avec un abonnement, vous aurez toujours accès à un contenu à jour adapté à vos besoins.

Electropedia - www.electropedia.org
Le premier dictionnaire d'électrotechnologie en ligne au monde, avec plus de 22 000 articles terminologiques en anglais et en français, ainsi que les termes équivalents dans 16 langues additionnelles. Egalement appelé Vocabulaire Electrotechnique International (IEV) en ligne.

Documents
Document Sharing Hub

Full document details: IEC 61400-13-2021

IEC 61400-13

Edition 1.1 2021-12
CONSOLIDATED VERSION

INTERNATIONAL STANDARD

NORME INTERNATIONALE

colour inside

Wind turbines –
Part 13: Measurement of mechanical loads

Éoliennes –
Partie 13: Mesurage des charges mécaniques

INTERNATIONAL
ELECTROTECHNICAL
COMMISSION

COMMISSION
ELECTROTECHNIQUE
INTERNATIONALE

ICS 27.180

ISBN 978-2-8322-1059-6

Warning! Make sure that you obtained this publication from an authorized distributor.
Attention! Veuillez vous assurer que vous avez obtenu cette publication via un distributeur agréé.

AVA Documents
Document Sharing Hub

® Registered trademark of the International Electrotechnical Commission
Marque déposée de la Commission Electrotechnique Internationale

Full document details: IEC 61400-13-2021

Documents
Document Sharing Hub

Full document details: IEC 61400-13-2021

IEC 61400-13

Edition 1.1 2021-12
CONSOLIDATED VERSION

REDLINE VERSION

VERSION REDLINE

colour inside

Wind turbines –
Part 13: Measurement of mechanical loads

Éoliennes –
Partie 13: Mesurage des charges mécaniques

IEC 61400-13:2015-12+AMD1:2021-12 CSV(en-fr)

Documents
Document Sharing Hub

Full document details: IEC 61400-13-2021

CONTENTS

FOREWORD 8
INTRODUCTION 10
INTRODUCTION to Amendment 1 10
1 Scope 11
2 Normative references 11
3 Terms and definitions 11
4 Symbols, units and abbreviations 14
5 General 16
5.1 Document structure 16
5.2 Safety during testing 17
6 Test requirements 17
6.1 General 17
6.2 Test site requirements 17
6.3 Measurement load cases 17
6.3.1 General 17
6.3.2 MLCs during steady-state operation 18
6.3.3 MLCs during transient events 18
6.3.4 MLCs for dynamic characterization 19
6.3.5 Capture matrices 20
6.4 Quantities to be measured 23
6.4.1 General 23
6.4.2 Load quantities 23
6.4.3 Meteorological quantities 25
6.4.4 Wind turbine operation quantities 25
6.5 Turbine configuration changes 26
7 Instrumentation 27
7.1 Load quantities 27
7.1.1 Types of sensors 27
7.1.2 Choice of sensor location 27
7.1.3 Measurement of blade root bending moments 27
7.1.4 Blade bending moment distribution 28
7.1.5 Blade torsion frequency/damping 28
7.1.6 Measurement of rotor yaw and tilt moment 28
7.1.7 Measurement of the rotor torque 28
7.1.8 Measurement of tower base bending 28
7.1.9 Tower top bending moments 28
7.1.10 Tower mid bending moments 29
7.1.11 Tower torque 29
7.1.12 Tower top acceleration 29
7.1.13 Pitch actuation loads (on hub side of pitch bearing) 29
7.2 Meteorological quantities 29
7.2.1 Measurement and installation requirements 29
7.2.2 Icing potential 29
7.2.3 Atmospheric stability 29
7.3 Wind turbine operation quantities 30

AVA Documents
Document Sharing Hub
Full document details: IEC 61400-13-2021

7.3.1 Electrical power ... 30
7.3.2 Rotor speed or generator speed ... 30
7.3.3 Yaw misalignment ... 30
7.3.4 Rotor azimuth angle ... 30
7.3.5 Pitch position ... 30
7.3.6 Pitch speed ... 30
7.3.7 Brake moment ... 30
7.3.8 Wind turbine status ... 30
7.3.9 Brake status ... 30
7.4 Data acquisition system ... 31
7.4.1 General ... 31
7.4.2 Resolution ... 31
7.4.3 Anti-aliasing ... 31
8 Determination of calibration factors ... 31
8.1 General ... 31
8.2 Calibration of load channels ... 32
8.2.1 General ... 32
8.2.2 Blade bending moments ... 33
8.2.3 Main shaft moments ... 33
8.2.4 Tower bending moments ... 34
8.2.5 Tower torque ... 34
8.3 Calibration of non-load channels ... 35
8.3.1 Pitch angle ... 35
8.3.2 Rotor azimuth angle ... 35
8.3.3 Yaw angle ... 35
8.3.4 Wind direction ... 35
8.3.5 Pitch actuation loads ... 35
8.3.6 Brake moment ... 36
9 Data verification ... 36
9.1 General ... 36
9.2 Verification checks ... 36
9.2.1 General ... 36
9.2.2 Blade moments ... 37
9.2.3 Main shaft ... 38
9.2.4 Tower ... 38
10 Processing of measured data ... 39
10.1 General ... 39
10.2 Fundamental load quantities ... 39
10.3 Load quantities for larger turbines ... 39
10.4 Wind speed trend detection ... 39
10.5 Statistics ... 40
10.6 Rainflow counting ... 40
10.7 Cumulative rainflow spectrum ... 40
10.8 Damage equivalent load ... 40
10.9 Wind speed binning ... 41
10.10 Power spectral density ... 42
11 Uncertainty estimation ... 42
12 Reporting ... 42
AVA Documents
Document Sharing Hub
Full document details: IEC 61400-13-2021

Annex A (informative) Example co-ordinate systems 46
A.1 General 46
A.2 Blade co-ordinate system 46
A.3 Hub co-ordinate system 46
A.4 Nacelle co-ordinate system 47
A.5 Tower co-ordinate system 48
A.6 Yaw misalignment 49
A.7 Cone angle and tilt angle 49
A.8 Rotor azimuth angle 50
A.9 Blade pitch angle 50
Annex B (informative) Procedure for the evaluation of uncertainties in load measurements on wind turbines 51
B.1 List of symbols 51
B.2 General procedure 52
B.2.1 Standard uncertainty 52
B.2.2 Analytical combination of standard uncertainties 53
B.2.3 Total uncertainty 54
B.3 Uncertainties of binned averaged values 55
B.3.1 General 55
B.3.2 Uncertainty of calibration and signal 55
B.3.3 Uncertainty of the bin scatter 55
B.3.4 Uncertainty of the x-axis quantity 55
B.3.5 Uncertainty of bin averaged mean values 55
B.4 Standard uncertainty of DEL and load spectra 56
B.5 Examples of an uncertainty evaluation 56
B.5.1 Example for analytical shunt calibration of tower torque 56
B.6 Determination and use of calibration matrix 65
B.6.1 Determination of the calibration matrix 65
B.6.2 Use of the calibration matrix 66
B.6.3 Time series 67
Annex C (informative) Sample presentation of mechanical load measurements and analysis 69
C.1 General 69
Annex D (informative) Recommendations for offshore measurements 81
Annex E (informative) Load model validation 83
E.1 General 83
E.2 Methods for loads comparison 84
E.2.1 Statistical binning 84
E.2.2 Spectral functions 85
E.2.3 Fatigue spectra 86
E.2.4 Point by point 86
Annex F (informative) Methods for identification of wind speed trends 88
F.1 List of symbols 88
F.2 General 88
F.3 Trend identification methods 89
F.4 Ongoing procedure 93
Annex G (informative) Data acquisition considerations 94
G.1 Data acquisition system 94

AVA Documents
Document Sharing Hub
Full document details: IEC 61400-13-2021

G.1.1 General ... 94
G.1.2 Resolution ... 94
G.1.3 Sampling model and filtering ... 95
G.1.4 Other considerations ... 97
Annex H (informative) Load calibration ... 98
H.1 General ... 98
H.2 Gravity load calibration of the blade bending ... 98
H.3 Analytical calibration of the tower bending moments ... 99
H.4 External load calibration of the rotor torque ... 100
Annex I (informative) Temperature drift ... 101
I.1 General ... 101
I.2 Known issues ... 101
I.3 Recommendations ... 102
Annex J (informative) Mechanical load measurements on vertical axis wind turbines ... 103
J.1 General ... 103
J.2 Terms and definitions ... 103
J.3 Coordinate systems ... 103
J.4 Quantities to be measured ... 104
J.4.1 Fundamental loads ... 104
J.5 Measurements ... 105
J.5.1 Measurement of blade attachment bending moments ... 105
J.5.2 Blade mid-span bending moment ... 105
J.5.3 Blade modal frequency/damping ... 105
J.5.4 Connecting strut bending moment ... 105
J.5.5 Connecting strut axial force ... 106
J.5.6 Connecting strut modal frequency/damping ... 106
J.5.7 Rotor shaft torque ... 106
J.5.8 Tower normal bending ... 106
Bibliography ... 107

Figure 1 – Fundamental wind turbine loads: tower base, rotor and blade loads ... 24
Figure A.1 – Blade co-ordinate system ... 46
Figure A.2 – Hub co-ordinate system ... 47
Figure A.3 – Nacelle co-ordinate system ... 48
Figure A.4 – Tower co-ordinate system ... 48
Figure A.5 – Yaw misalignment ... 49
Figure A.6 – Cone angle and tilt angle ... 49
Figure B.1 – Explanation of used symbols ... 62
Figure C.1 – Hub-height wind speed as a function of time ... 69
Figure C.2 – Hub-height turbulence intensity as a function of hub-height wind speed ... 70
Figure C.3 – Turbulence intensity trending as a function of hub-height wind speed ... 70
Figure C.4 – Global capture matrix with all loads channels operating ... 71
Figure C.5 – IEC example turbine at 9,1 m/s – Wind turbine operational and meteorological quantities ... 72
Figure C.6 – IEC example turbine at 9,1 m/s – Major load components ... 73
Figure C.7 – 10-minute statistics for blade 1 root edge bending ... 74
AVA Documents
Document Sharing Hub
Full document details: IEC 61400-13-2021

Figure C.8 – Power spectral density of blade 1 root edge bending 75
Figure C.9 – Cumulative rainflow spectrum for blade 1 root edge bending during test period 77
Figure C.10 – IEC example turbine normal shutdown at 9,5 m/s – Wind turbine operational and meteorological quantities 79
Figure C.11 – IEC example turbine normal shutdown at 9,5 m/s – Major load components 80
Figure D.1 – Example of wave spectrum and monopile response 81
Figure D.2 – Example of wave spectrum 82
Figure E.1 – Measured data 84
Figure E.2 – Simulated data 84
Figure E.3 – Comparison of wind speed binned averaged 10 min. statistics 84
Figure E.4 – Comparison of 1 Hz equivalent loads 85
Figure E.5 – Comparison of 1 Hz equivalent loads (wind speed binned) 85
Figure E.6 – Comparison of PSD functions 85
Figure E.7 – Comparison of fatigue spectra 86
Figure E.8 – Point by point comparison of wind speed time histories 87
Figure E.9 – Point by point comparison of load time histories 87
Figure F.1 – Comparison of measured wind speed (v_{meas}), smoothing-filtered wind speed (v_{filt}) and resulting trend-free wind speed (v_{HP}) 89
Figure F.2 – Differences of turbulence intensities calculated with un-filtered and filtered wind speed versus mean measured wind speed 91
Figure F.3 – Ratio of turbulence intensities calculated with un-filtered and filtered wind speed versus mean measured wind speed 92
Figure G.1 – Anti-aliasing check 95
Figure I.1 – Observed scatter in the original 10-min average values of the blade edge moment together with the same signal after temperature compensation in dark blue 101
Figure I.2 – Linear regression through the offsets derived from the different calibration runs 102
Figure J.1 – Darrieus style VAWT 104
Figure J.2 – Helical Darrieus style VAWT 104

Table 1 – MLCs during steady-state operation related to the DLCs defined in IEC 61400-1 18
Table 2 – Measurement of transient load cases related to the DLCs defined in IEC 61400-1 19
Table 3 – MLCs for dynamic characterization 19
Table 4 – Capture matrix for normal power production for stall controlled wind turbines 21
Table 5 – Capture matrix for normal power production for non stall controlled wind turbines 22
Table 6 – Capture matrix for parked condition 22
Table 7 – Capture matrix for normal transient events 23
Table 8 – Capture matrix for other than normal transient events 23
Table 9 – Wind turbine fundamental load quantities 24
Table 10 – Additional load quantities for turbines with a rated power output greater than 1 500 kW and rotor diameter greater than 75 m 25

AVA Documents
Document Sharing Hub
Full document details: IEC 61400-13-2021

Table 11 – Meteorological quantities 25
Table 12 – Wind turbine operation quantities 26
Table 13 – Summary of suitable calibration methods 32
Table B.1 – Uncertainty components 57
Table B.2 – Values and uncertainties for the calculation 61
Table C.1 – Binned data for blade 1 root edge bending 76
Table C.2 – Transient capture matrix for normal start-up and shutdown 78
Table C.3 – Brief statistical description for normal shutdown for IEC example turbine at 9,5 m/s 78
Table G.1 – Wind turbine significant frequencies 96
Table G.2 – Sampling ratio 96
Table J.1 – Minimum recommendations for VAWT fundamental load quantities 105

Documents
Document Sharing Hub
Full document details: IEC 61400-13-2021

INTERNATIONAL ELECTROTECHNICAL COMMISSION

WIND TURBINES –

Part 13: Measurement of mechanical loads

FOREWORD

1) The International Electrotechnical Commission (IEC) is a worldwide organization for standardization comprising all national electrotechnical committees (IEC National Committees). The object of IEC is to promote international co-operation on all questions concerning standardization in the electrical and electronic fields. To this end and in addition to other activities, IEC publishes International Standards, Technical Specifications, Technical Reports, Publicly Available Specifications (PAS) and Guides (hereafter referred to as "IEC Publication(s)"). Their preparation is entrusted to technical committees; any IEC National Committee interested in the subject dealt with may participate in this preparatory work. International, governmental and non-governmental organizations liaising with the IEC also participate in this preparation. IEC collaborates closely with the International Organization for Standardization (ISO) in accordance with conditions determined by agreement between the two organizations.
2) The formal decisions or agreements of IEC on technical matters express, as nearly as possible, an international consensus of opinion on the relevant subjects since each technical committee has representation from all interested IEC National Committees.
3) IEC Publications have the form of recommendations for international use and are accepted by IEC National Committees in that sense. While all reasonable efforts are made to ensure that the technical content of IEC Publications is accurate, IEC cannot be held responsible for the way in which they are used or for any misinterpretation by any end user.
4) In order to promote international uniformity, IEC National Committees undertake to apply IEC Publications transparently to the maximum extent possible in their national and regional publications. Any divergence between any IEC Publication and the corresponding national or regional publication shall be clearly indicated in the latter.
5) IEC itself does not provide any attestation of conformity. Independent certification bodies provide conformity assessment services and, in some areas, access to IEC marks of conformity. IEC is not responsible for any services carried out by independent certification bodies.
6) All users should ensure that they have the latest edition of this publication.
7) No liability shall attach to IEC or its directors, employees, servants or agents including individual experts and members of its technical committees and IEC National Committees for any personal injury, property damage or other damage of any nature whatsoever, whether direct or indirect, or for costs (including legal fees) and expenses arising out of the publication, use of, or reliance upon, this IEC Publication or any other IEC Publications.
8) Attention is drawn to the Normative references cited in this publication. Use of the referenced publications is indispensable for the correct application of this publication.
9) Attention is drawn to the possibility that some of the elements of this IEC Publication may be the subject of patent rights. IEC shall not be held responsible for identifying any or all such patent rights.

This consolidated version of the official IEC Standard and its amendment has been prepared for user convenience.

IEC 61400-13 edition 1.1 contains the first edition (2015-12) [documents 88/511/CDV and 88/554/RVC] and its amendment 1 (2021-12) [documents 88/795/CDV and 88/821/RVC].

In this Redline version, a vertical line in the margin shows where the technical content is modified by amendment 1. Additions are in green text, deletions are in strikethrough red text. A separate Final version with all changes accepted is available in this publication.

Documents
Document Sharing Hub
Full document details: IEC 61400-13-2021

This International Standard IEC 61400-13 has been prepared by IEC technical committee 88: Wind turbines.

This standard replaces IEC TS 61400-13 published in 2001. This first edition constitutes a technical revision and transition from technical specification to International Standard.

This first edition includes the following changes with respect to the technical specification:

a) scope of the document focused to load measurements for the purpose of model validation;

b) number of measurement load cases to match the new scope reduced;

c) capture matrix requirements to match the new scope reduced;

d) requirements to address the state of the art technology updated.

This publication has been drafted in accordance with the ISO/IEC Directives, Part 2.

A list of all parts in the IEC 61400 series, published under the general title *Wind turbines*, can be found on the IEC website.

The committee has decided that the contents of the base publication and its amendment will remain unchanged until the stability date indicated on the IEC web site under webstore.iec.ch in the data related to the specific publication. At this date, the publication will be

- reconfirmed,
- withdrawn,
- replaced by a revised edition, or
- amended.

IMPORTANT – The 'colour inside' logo on the cover page of this publication indicates that it contains colours which are considered to be useful for the correct understanding of its contents. Users should therefore print this document using a colour printer.

Documents
Document Sharing Hub

Full document details: IEC 61400-13-2021

INTRODUCTION

In the process of structural design of a wind turbine, thorough understanding about, and accurate quantification of, the loading is of utmost importance.

In the design stage, loads can be predicted with aeroelastic models and codes. However, such models have their shortcomings and uncertainties, and they always need to be validated by measurement.

Mechanical load measurements can be used both as the basis for design and as the basis for certification. Design aspects for wind turbines are covered by IEC 61400-1 whilst certification procedures are described in IEC 61400-22. This standard is aimed at the test institute, the turbine manufacturer and the certifying body and clearly defines the minimum requirements for a mechanical loads test resulting in consistent, high quality reproducible test results.

INTRODUCTION to Amendment 1

This amendment to IEC 61400-13:2015 addresses the errors found in Annex B which impact a significant portion of that annex.

Documents
Document Sharing Hub
Full document details: IEC 61400-13-2021

© IEC 2021

WIND TURBINES –

Part 13: Measurement of mechanical loads

1 Scope

This part of the IEC 61400 describes the measurement of fundamental structural loads on wind turbines for the purpose of the load simulation model validation. The standard prescribes the requirements and recommendations for site selection, signal selection, data acquisition, calibration, data verification, measurement load cases, capture matrix, post-processing, uncertainty determination and reporting. Informative annexes are also provided to improve understanding of testing methods.

The methods described in this document can also be used for mechanical loads measurements for other purposes such as obtaining a measured statistical representation of loads, direct measurements of the design loads, safety and function testing, or measurement of component loads. If these methods are used for an alternative objective or used for an unconventional wind turbine design, the required signals, measurement load cases, capture matrix, and post processing methods should be evaluated and if needed adjusted to fit the objective.

These methods are intended for onshore electricity-generating, horizontal-axis wind turbines (HAWTs) with rotor swept areas of larger than 200 m^2. However, the methods described may be applicable to other wind turbines (for example, small wind turbines, ducted wind turbines, vertical axis wind turbines).

2 Normative references

The following documents, in whole or in part, are normatively referenced in this document and are indispensable for its application. For dated references, only the edition cited applies. For undated references, the latest edition of the referenced document (including any amendments) applies.

IEC 60050 (all parts), *International Electrotechnical Vocabulary* (available at <http://www.electropedia.org/>)

IEC 61400-1:2005, *Wind turbines – Part 1: Design requirements*

IEC 61400-12-1, *Wind turbines – Part 12-1: Power performance measurements of electricity producing wind turbines*

ISO/IEC Guide 98-3, *Uncertainty of measurement – Part 3: Guide to the expression of uncertainty in measurement*

3 Terms and definitions

For the purposes of this document, the terms and definitions related to wind turbine systems or wind energy in general of IEC 60050-415 as well as the following apply.

3.1
blade
rotating aerodynamically active part of the rotor

Documents
Document Sharing Hub

Full document details: IEC 61400-13-2021

3.2
blade root
that part of the blade that is connected to the hub of the rotor

3.3
brake status
status indicating if the brake is applied or not

3.4
calibration
determination of the transfer function and its coefficients from sensor output to the physical value

3.5
capture matrix
organization of the measured time series according to their mean wind speeds and turbulence intensities

3.6
chord line
imaginary straight line that joins the leading and trailing edges of a blade airfoil cross-section

3.7
cut-in wind speed
lowest wind speed at hub height at which the wind turbine starts to produce power in the case of steady wind without turbulence

3.8
cut-out wind speed
highest wind speed at hub height at which the wind turbine is designed to produce power in the case of steady wind without turbulence

3.9
design loads
loads that the turbine is designed to withstand

Note 1 to entry: They are obtained by applying the appropriate partial load factors to the characteristic values.

3.10
edgewise
direction that is parallel to the local chord

Note 1 to entry: In contrast, lead lag is the direction that is parallel to the plane of the swept surface and perpendicular to the longitudinal axis of the undeformed rotor blade.

3.11
flatwise
direction that is perpendicular to the local chord, and spanwise blade axis

Note 1 to entry: In contrast, flapwise is the direction that is perpendicular to the surface swept by the undeformed rotor blade axis.

3.12
hub
fixture for attaching the blades or blade assembly to the main shaft

3.13
nacelle
housing which contains the drive train and other equipment on the top of a HAWT tower

AVA Documents
Document Sharing Hub
Full document details: IEC 61400-13-2021

3.14
natural frequency
eigenfrequency
frequency at which a structure will choose to vibrate when perturbed and allowed to vibrate freely

3.15
outboard
towards the blade tip

3.16
parked wind turbine
depending on the design of the wind turbine, parked refers to the turbine being either in a standstill or an idling condition

3.17
rated power
quantity of power assigned, generally by a manufacturer, for a specified operating condition of a component, device or equipment

Note 1 to entry: Maximum continuous electrical power output which a wind turbine is designed to achieve under normal operating and external conditions.

3.18
rated wind speed
minimum wind speed at hub height at which a wind turbine's rated power is achieved in the case of steady wind without turbulence

3.19
reference wind speed
basic parameter for wind speed used for defining wind turbine classes

Note 1 to entry: Other design related climatic parameters are derived from the reference wind speed and other basic wind turbine class parameters.

Note 2 to entry: A turbine designed for a wind turbine class with a reference wind speed v_{ref}, is designed to withstand climates for which the extreme 10 min average wind speed with a recurrence period of 50 years at turbine hub height is lower than or equal to v_{ref}.

3.20
rotor centre
point on the main shaft in the plane perpendicular to the main shaft that contains the blade co-ordinate origin of the reference blade

3.21
rotor plane
plane perpendicular to the main shaft and which includes the rotor centre

3.22
steady-state operation
state of operation of the turbine during which it remains in a steady state such as during power production, power production + fault condition and when parked and for which the external conditions remain essentially steady

3.23
transient event
event during which the state of operation of the wind turbine changes, such as during shutdown

Documents
Document Sharing Hub
Full document details: IEC 61400-13-2021

3.24
turbulence intensity
ratio of the standard deviation of the wind speed in a given ten minute time interval to the mean wind speed in the same ten minute time interval

Note 1 to entry: For the purpose of the capture matrix the TI needs to be equivalent to that that would be reported by a cup anemometer in case a different sensing technique is used.

3.25
wind shear
variation of horizontal wind speed with height above ground

Note 1 to entry: Commonly used profile is the power law profile (Equation (1)).

$$V(z) = V(z_\mathrm{r}) \times \left(\frac{z}{z_\mathrm{r}} \right)^{\alpha} \tag{1}$$

where

$V(z)$ is the horizontal wind speed at height z;

z is the height above ground;

z_r is a reference height above ground, normally hub height;

α is the wind shear (or power law) exponent.

3.26
wind veer
difference in wind direction with height:

$$\phi(z) - \phi(z_\mathrm{r}) \tag{2}$$

where

ϕ is the wind direction;

z is the height above ground;

z_r is a reference height above ground, normally hub height.

3.27
yaw misalignment
the horizontal angle between the wind direction and the main shaft axis

3.28
yaw position
angle between the vertical projection of the centre line of the main shaft on the tower base and a reference direction (e.g. true north, magnetic north, etc.)

Note 1 to entry: The yaw position is positive rotating clockwise (top view).

4 Symbols, units and abbreviations

σ	Standard deviation	
σ_{xi}	Standard deviation of the mean in wind speed bin i	
φ_F	Angle for yaw misalignment	[°]
η	Efficiency of the components between point of main shaft torque measurement and point of power measurement	[%]
ϕ	Wind direction	[°]
Ω	Rotor speed	[rad/s]

AVA Documents
Document Sharing Hub
Full document details: IEC 61400-13-2021

$\lceil\rceil$	Rounded up to nearest integer value	
B	Number of blades	
C	Constant used in S-N curve formulation	
C_p	Power coefficient	
C_t	Thrust coefficient	
F	Frequency	[Hz]
F_c	Filter cut off frequency	[Hz]
F_d	Valid bandwidth	[Hz]
F_s	Sampling frequency	[Hz]
I	Index for wind speed bin	
j	Index for number of data sets in the ith wind speed bin	
L	Number of blades instrumented for blade root bending moments	
M_{bi}	Blade-root in-plane bending moment	[Nm]
M_{be}	Blade-root edgewise bending moment	[Nm]
M_{bf}	Blade-root flatwise bending moment	[Nm]
M_{tl}	Tower base lateral bending moment	[Nm]
M_{tn}	Tower base normal bending moment	[Nm]
M_{tilt}	Rotor tilt moment	[Nm]
M_{ttl}	Tower top lateral moment	[Nm]
M_{ttn}	Tower top normal moment	[Nm]
M_{ttt}	Tower top torque	[Nm]
M_x	Main shaft torque	[Nm]
M_{yaw}	Rotor yaw moment	[Nm]
M	Slope of S-N curve	
n_i	Number of cycles in the ith class of the fatigue load spectrum	
N	Number of cycles to failure	
N_i	Number of 10 minute data sets in bin i	
P	Power output of the turbine	[W]
P_r	Rated power	[W]
R_{eq}	The 1 Hz ten minute equivalent load	[Nm]
R_i	Load of the ith range bin of the fatigue load spectrum	[Nm]
S	Load range	[Nm, N]
TI	Turbulence Intensity	[%]
v_{hub}	Wind speed at hub height	[m/s]
v_i	Bin averaged wind speed in wind speed bin i	[m/s]
$v_{i,j}$	Ten minute averaged wind speed of data set j in wind speed bin i	[m/s]
v_{in}	Cut-in wind speed	[m/s]
v_{out}	Cut-out wind speed	[m/s]
v_r	Rated wind speed	[m/s]
v_{ref}	Reference wind speed	[m/s]
V_{FSR}	Full scale range of data acquisition system	[V]
x_b, y_b, z_b	Blade co-ordinates (see Figure A.1)	

Documents
Document Sharing Hub
Full document details: IEC 61400-13-2021

x_h, y_h, z_h	Hub co-ordinates (see Figure A.2)	
x_I	Input quantity	
x_n, y_n, z_n	Nacelle co-ordinates (see Figure A.3)	
x_t, y_t, z_t	Tower co-ordinates (see Figure A.4)	
x_i	Bin averaged variable in question in wind speed bin i	
$x_{i,j}$	Ten minute averaged variable of data set j in wind speed bin i	
z	Height above ground	[m]
z_r	Reference height above ground, normally hub height	[m]
DAS	Data acquisition system	
DEL	Damage equivalent load	
DLC	Design load case	
HAWT	Horizontal axis wind turbine	
MLC	Measurement load case	
PSD	Power spectral density	
TI	Turbulence intensity	
VAWT	Vertical axis wind turbine	

5 General

5.1 Document structure

This document is structured to follow the general process one would go through while conducting a mechanical loads test:

- Clause 6 contains the requirements for the test site, measurement load cases and the quantities to be measured,
- Clause 7 contains the requirements on the instrumentation to be used,
- Clause 8 contains the requirements for the calibrations,
- Clause 9 contains the recommendations for the data verification (both verification of the calibrations and verifications to be performed throughout the campaign),
- Clause 10 contains the requirements for the post processing,
- Clause 11 contains the requirements for uncertainty estimation, and
- Clause 12 contains the requirements for the reporting of the results.

In addition to the normative sections above, the document also contains informative annexes for the following subjects:

- Example coordinate system
- Uncertainty estimation method
- Example reporting of results
- Recommendations for offshore testing
- Load model validation
- Wind speed trend detection methods
- Considerations for data acquisition design
- Calibration of loads channels
- Temperature drift
- Load measurements on VAWTs

Documents
Document Sharing Hub
Full document details: IEC 61400-13-2021

5.2 Safety during testing

Certain measurement load cases (MLCs) involve deliberate operation of the turbine in extreme and/or emergency fault conditions (for example, grid loss). As the purpose of the tests and measurements in most cases is to verify loads on a prototype turbine, it shall not be assumed that the turbine will behave and respond as intended. Therefore, such tests shall always be assumed to be dangerous and due regard shall be taken for personnel safety. On this basis, such tests shall be initiated and observed from a safe position, usually at a certain distance upwind of the rotor plane and they should not be carried out with personnel inside or on the nacelle or tower or within the rotor plane. All tests and test procedures shall be agreed with the turbine manufacturer before implementation to ensure that the turbine integrity, and hence that personnel safety, is not compromised. Requirements from existing applicable safety standards shall be followed.

6 Test requirements

6.1 General

In Clause 6 the requirements for the test are described. These include requirements for

- the test site,
- the MLCs and the amount of data required for each,
- the quantities to be measured, and
- changes in the turbine configuration.

6.2 Test site requirements

The terrain and wind conditions shall be capable of fulfilling the requirements of the capture matrix. This is particularly true for the turbine configurations that use the capture matrix in Table 4. An obstacle assessment and terrain assessment shall be completed per IEC 61400-12-1. The measurement sector can be expanded beyond the one found using the methods in IEC 61400-12-1 if it can be shown that the wind speed and TI measured at the meteorological mast are representative of those seen by the wind turbine (e.g. turbine and meteorological mast on ridge). If the test site does not meet the requirements of IEC 61400-12-1, a site calibration should be performed. It should be noted that flat terrain with low turbulence is not ideal for a mechanical loads test due to potential lack of excitation of the wind turbine dynamics.

In general the accuracy requirement for hub height wind speed for a mechanical loads test is not as stringent as for power performance testing. However if no site calibration is performed in complex terrain where large flow correction factors can be expected there is increased risk that the test data may not be suitable for model validation.

NOTE When selecting a test site consideration should be given to the presence of external conditions that might impact the ability to validate the model (e.g. length scale, low level jets, negative wind shear…).

6.3 Measurement load cases

6.3.1 General

Subclause 6.3.1 describes the minimum required MLCs needed for proper model validation. Where applicable the MLCs are defined in relation to the DLCs, described in IEC 61400-1.

The MLCs define the main external conditions and the operational conditions of the turbine during the measurement campaign.

The external conditions include meteorological quantities such as wind speed, turbulence intensity and air density.

Documents
Document Sharing Hub
Full document details: IEC 61400-13-2021

The operational conditions include operational quantities such as rotational speed, yaw misalignment, electrical power and blade pitch angle. The operational conditions depend on the wind turbine configuration and shall be specified for each particular case.

Due to the stochastic character of the external conditions, measurements of some MLC shall be repeated in order to reduce the statistical uncertainty. The minimum number of measurements at each MLC is specified in this subclause.

The measured time histories are classified in two ways: one considering steady-state operation and one considering transient events. All steady-state operation time series are by default ten minutes.

Tables 1, 2 and 3 show the minimum MLCs that shall be recorded. The MLCs defined in the tables may not be complete. Additional MLCs may be necessary depending on the wind turbine concept, control strategy, and safety strategy.

6.3.2 MLCs during steady-state operation

6.3.2.1 Power production

During power production, measurements shall be performed between cut-in and to cut-out or v_r +4 m/s (depending on turbine configuration) (see Table 4 and Table 5).

6.3.2.2 Parked

The loads on the parked wind turbine shall be measured. It is recommended that measurements be performed at wind speeds as high as possible.

Table 1 – MLCs during steady-state operation related to the DLCs defined in IEC 61400-1

MLC number	MLC	DLC number (IEC 61400-1)	Remarks
1.1	Power production	1.2	In this mode of operation, the wind turbine is running and connected to the grid
1.2	Parked	6.4	When the wind turbine is parked, the rotor may be either at a standstill or idling

6.3.3 MLCs during transient events

6.3.3.1 Start-up

This MLC includes all events resulting in loads on the wind turbine during the transients from standstill or idling to power production. The normal start-up of the turbine shall be performed at cut-in wind speed and at a wind speed greater than 2 m/s above rated wind speed. If the turbine operates at more than one fixed speed, cut-in on the different rotational speeds shall be evaluated also.

6.3.3.2 Normal shutdown

This design situation includes all events resulting in loads on a wind turbine during the normal transient caused by going from a power production situation to a parked condition. The normal shutdown shall be performed at cut-in wind speed, at rated wind speed and above rated wind speed.

Documents
Document Sharing Hub
Full document details: IEC 61400-13-2021

6.3.3.3 Emergency shutdown

The loads during an emergency shutdown shall be considered. This shutdown shall be performed at/above rated power.

6.3.3.4 Grid failure

The loads during a grid failure shall be considered. This MLC shall be performed while the turbine is producing rated power, by removing external power to the wind turbine resulting in a shutdown.

Table 2 – Measurement of transient load cases related to the DLCs defined in IEC 61400-1

MLC number	MLC	DLC	Target conditions
2.1	Start-up	3.1	v_{in} and > v_r + 2 m/s
2.2	Normal shutdown	4.1	v_{in}, v_r and > v_r + 2 m/s
2.3	Emergency shutdown (by pushbutton)	5.1	P_r
2.4	Grid failure	2.4	P_r

6.3.4 MLCs for dynamic characterization

Table 3 provides the measurement load cases that are recommended for the dynamic characterization. The table also provides the targeted frequencies for each MLC.

Table 3 – MLCs for dynamic characterization

MLC number	Measurement load case	Wind condition at MLC	Target frequencies	Comment
3.1	Power production	$v_{in} < v_{hub} < v_{out}$ [a]	Blade, tower and drivetrain frequencies	Normal operation below rated wind speed and above rated wind speed with relatively steady rotational speed
3.2	Parked	High wind speed[a]	Blade and tower frequencies	Turbine is parked (standstill or idling)
3.3	Emergency stop	$v_{hub} > v_r$	Blade tower and drivetrain frequencies	Emergency stop from rated power
3.4	Yaw start /stop	Low wind speed[b]	Blade frequencies	With an instrumented blade in a horizontal position, the blade gets excited by starting and stopping the nacelle yaw rotation. Test shall be conducted with blades in normal operating position (targeting the flatwise frequencies) and with blades feathered (targeting the edge frequencies)
3.5	Manual excitation	Low wind speed[b]	Blade frequencies	

[a] High enough to get sufficient excitation, this will be wind turbine specific.

[b] Low enough wind speed to not have the excitation affected by other aerodynamic loads.

Documents
Document Sharing Hub

Full document details: IEC 61400-13-2021

6.3.5 Capture matrices

6.3.5.1 General

The capture matrices are used to organize the measured time series. The capture matrices have two objectives: they are used to specify the minimum required data for each measurement load case and can be used to report the test database to demonstrate the minimum data requirements have been fulfilled.

The number of bins in the matrices have to be adapted for each specific measurement campaign based on the turbine specifications (e.g. v_{in} and v_r).

6.3.5.2 Power production

6.3.5.2.1 General

During the measurement campaign, the data should be classified according to the wind speed and turbulence intensity. Even though there is no requirement on the turbulence intensity at high wind speeds, the recorded data shall be classified according to the turbulence bins.

For power production, two capture matrices are provided in Table 4 and Table 5. Both these capture matrices use 1 m/s wide wind speed bins and 2 % wide turbulence intensity bins. The boundaries of the bins are determined by the turbine specifications (v_{in}, v_r, v_{out}). For the purpose of determining the bin boundaries v_{in}, v_r and v_{out} should be rounded up to the nearest integer wind speed (indicated with $\lceil\ \rceil$).

For time series to count towards the minimum data requirements:

- Ten minute average wind direction is inside the measurement sector (see 6.2).
- All mandatory signals in Table 9, Table 11 and Table 12 shall be valid.
- Data were not recorded under abnormal conditions (turbine or environmental, such as ice on the blades or an extreme direction change in the wind).
- Turbine shall produce power for full ten minute period.

6.3.5.2.2 Power production – stall controlled turbines

Table 4 shall be used for stall controlled (both passive and active) wind turbines. Inherent to the nature of stall regulated wind turbines, is the fact that the blades continue to see a higher angle of attack with increasing wind speed above rated conditions. For this reason plus the increased importance of unsteady aerodynamics (dynamic stall, dynamic wake, rotational aerodynamics), it is important to collect data throughout the operational envelope of the turbine with as much emphasis on the higher wind bins as possible.

Note that the boundaries of the bins are not dependent on the rated wind speed of the wind turbine:

- For each wind speed bin above v_{in} and less than or equal to 12 m/s either 20 ten minute time series shall be collected or at least one TI bin shall have 6 ten minutes time series in it. Only time series with a TI value of larger than 5 % count toward fulfilling this requirement.
- For each wind speed bin above 12 m/s and less than or equal to 16 m/s a minimum of 20 time series shall be collected or at least any one TI bin shall have 6 ten minutes time series in it.
- For each wind speed bin above 16 m/s and less than or equal to 20 m/s, a minimum of 8 time series shall be collected.
- For the wind speed range above 20 m/s and less than or equal to $\lceil v_{out} \rceil$ a minimum of 8 time series shall be collected.

AVA Documents
Document Sharing Hub
Full document details: IEC 61400-13-2021

Table 4 – Capture matrix for normal power production for stall controlled wind turbines

	Normal power production **Wind speed bin size: 1 m/s** **Turbulence bin size: 2 %**												
Time series length	**10 min**												
WS range[b] m/s	v_{in} to 12					12 to 16				16 to 20			20 to v_{out}
Wind[b] (m/s) ⇒ TI[b] (%) ⇓	$\lceil v_{in} \rceil$	…	4-5	…	11-12	12-13	13-14	14-15	15-16	16-17	…	19-20	20-$\lceil v_{out} \rceil$[c]
>29													8 time series (in total, not for each 1 m/s bin)
27-29													
…													
5-7													
<5…													
Minimum data requirement	20 time series for each 1 m/s bin[a] OR one TI bin with 6 time series for each 1 m/s bin[a]					20 time series for each 1 m/s bin OR one TI bin with 6 time series for each 1 m/s bin				8 time series for each 1 m/s bin			

[a] Time series that count towards both criteria above shall have TI > 5 %.

[b] For all wind speed and turbulence intensity bins in this table the upper limit of the bin is inclusive (e.g. 4-5 includes $4 < v \leq 5$ m/s).

[c] If v_{out} is less than or equal to 20 m/s, only measurements up to v_{out} are required.

6.3.5.2.3 Power production – non-stall controlled turbines

Table 5 shall be used for all turbines that are not stall controlled (such as pitch to feather).

- For each wind speed bin above v_{in} and less than or equal to v_r – 2, either 20 ten minute time series shall be collected or at least one TI bin with a value of larger than 5 % shall have 6 ten minute time series in it.
- For each wind speed bin above v_r – 2 and less than or equal to v_r + 2, a minimum of 20 time series shall be collected.
- For each wind speed bin above v_r + 2 and less than or equal to v_r + 4, a minimum of 10 time series shall be collected.

Documents
Document Sharing Hub
Full document details: IEC 61400-13-2021

Table 5 – Capture matrix for normal power production for non stall controlled wind turbines

	Normal power production Wind speed bin size: 1 m/s Turbulence bin size: 2 %									
Time series length	**10 min**									
WS range[b]	$\lceil v_{in} \rceil$ to $\lceil v_r \rceil - 2$				$\lceil v_r \rceil - 2$ to $\lceil v_r \rceil + 2$			$\lceil v_r \rceil + 2$ to $\lceil v_r \rceil + 4$		
Wind[b] (m/s)⇒ TI[b] %)⇓	$\lceil v_{in} \rceil$ -	…	4-5	…	…		…		…	…
>29										
27-29										
…										
…										
7-9										
5-7										
<5										
Minimum data requirement	20 time series for each 1 m/s bin OR one TI bin with 6 time series for each 1 m/s bin [a]				20 time series for each 1 m/s bin			10 time series for each 1 m/s bin		

[a] Time series that count towards both criteria above shall have TI > 5 %.

[b] For all wind speed and turbulence intensity bins in this table the upper limit of the bin is inclusive (e.g. 4-5 includes $4 < v \leq 5$ m/s).

6.3.5.3 Parked

The parked measurement load case has the turbine in the parked state that it would normally be in wind speeds above v_{out} (either standstill or idling). One time series shall be collected with target values of 30° yaw misalignment, one with 0° yaw misalignment and one with –30° yaw misalignment (see Table 6).

When more data sets get collected than the minimum listed in the capture matrix, only the minimum required need to be reported.

Table 6 – Capture matrix for parked condition

Parked			
Time series record length	**10 min**		
Parking modes	normal parked state it would be in above cut out wind speed (for example, idling, standstill)		
Target yaw misalignment	–30	0	30
Mean wind speed	> v_r m/s	> v_r m/s	> v_r m/s
Minimum data requirement	1	1	1

6.3.5.4 Transient events

The capture matrices for the transient events are given in Table 7 and Table 8. The minimum number of repetitions and the wind speed range are indicated in Table 7. The wind speed is the wind speed at the beginning of the transient event. The emergency shutdown and grid failure shall be performed at rated power.

AVA Documents
Document Sharing Hub
Full document details: IEC 61400-13-2021

Table 7 – Capture matrix for normal transient events

Normal start-up and shutdown events				
Event	**Wind speed** [a,b]	(v_{in} to v_r – 2)	(v_r – 2 to v_r + 2)	> v_r + 2
Start-up	Minimum required repetitions	3	–	3
Normal shut- down	Minimum required repetitions	3	3	3

[a] The wind speed is the wind speed when the transient event gets triggered.

[b] For the wind speed ranges the upper limit is inclusive (e.g. $v_{in} < v \leq v_r - 2$).

Table 8 – Capture matrix for other than normal transient events

Other transient events		
Event	**Target conditions**	**Minimum required repetitions**
Emergency shutdown	P_r	3
Grid failure	P_r	3

6.4 Quantities to be measured

6.4.1 General

The main objective of mechanical load measurements is the verification of the design load model of the tested wind turbine type. This is performed by repeating the aero-elastic analysis with the model parameters adjusted to match the measured site conditions. Therefore it is essential to have a good representation of meteorological quantities as well as the operational quantities in order to have the possibility to compare measured and simulated load quantities.

The relevant physical quantities to be determined in order to characterize the loading of wind turbines can be classified into

- load quantities (for example, blade loads, rotor loads and tower loads);
- meteorological quantities (for example, wind speed and direction, air density);
- operational quantities (for example, power, rotational speed, pitch angles, yaw misalignment, rotor azimuth angle).

In 6.4.2, a more detailed specification is given for the various categories of measurement quantities.

Mandatory and recommended measurements as listed in Table 9, Table 10, Table 11 and Table 12 are found to be necessary for model validation. There is a risk skipping recommended channels. Recommended channels may be helpful explaining differences between the simulated and measured data.

Table 9, Table 11 and Table 12 describe the minimum requirements for measurements. These requirements are valid for a pitch controlled turbine with a tubular steel tower and simple blades. In case of special designs as e.g. hybrid towers, hybrid or two part connected blades, active aerodynamic controls on the blades, teetered hub etc., additional measurements (e.g. flap deployment status, teeter angle) may be required for model validation.

6.4.2 Load quantities

The fundamental loads to be measured are listed in Table 9. These are the basic loads on crucial locations of the wind turbine construction from which the loading in all the relevant

AVA Documents
Document Sharing Hub
Full document details: IEC 61400-13-2021

wind turbine structural components can be derived. The fundamental load components are also given in Figure 1.

Table 9 – Wind turbine fundamental load quantities

Load quantities	Level of importance
Blade root flatwise bending moment (M_{bf})	1 blade mandatory additional blade recommended
Blade root edgewise bending moment (M_{be})	1 blade mandatory additional blade recommended
Rotor tilt moment (M_{tilt})	Mandatory
Rotor yaw moment (M_{yaw})	Mandatory
Rotor torque (M_x)	Mandatory
Tower base normal (M_{tn})	Mandatory
Tower base lateral moment (M_{tl})	Mandatory

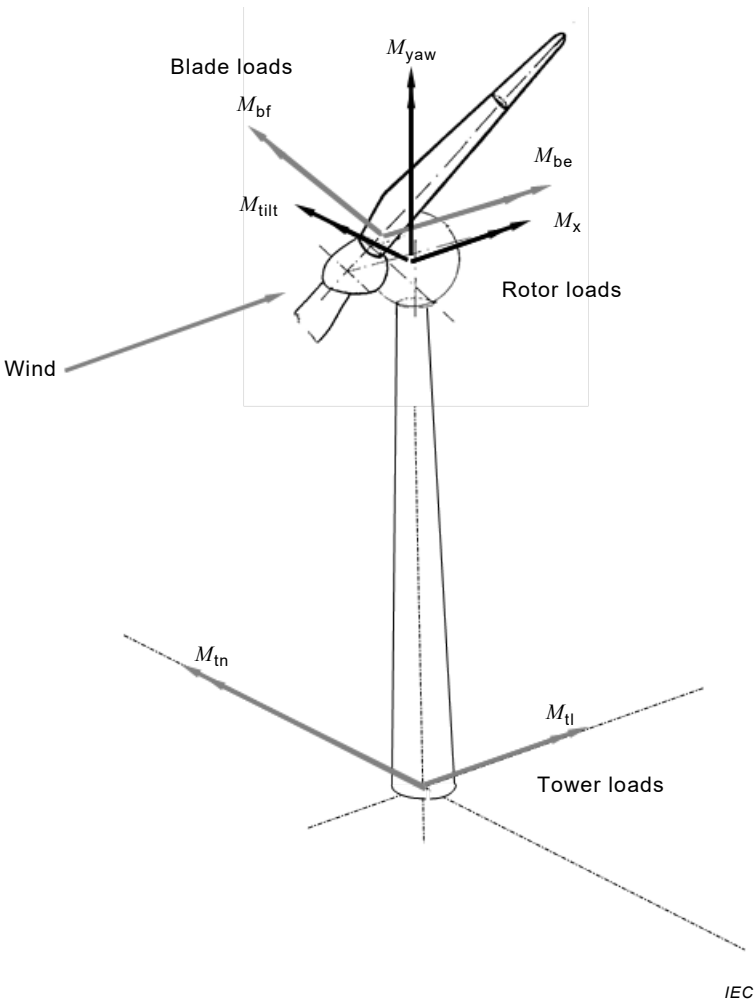

Figure 1 – Fundamental wind turbine loads: tower base, rotor and blade loads

For turbines with a rated power output greater than 1 500 kW and a rotor diameter greater than 75 m, additional quantities are required as shown in Table 10. Signals to measure the quantities in Table 10 shall be installed and in case of signal failure shall be repaired where practical.

Documents
Document Sharing Hub
Full document details: IEC 61400-13-2021

Measurement on a second blade is required to verify similar behaviour of blades and correct calibrations. The measurement of a second blade may not need to cover an entire capture matrix if this can be demonstrated.

Table 10 – Additional load quantities for turbines with a rated power output greater than 1 500 kW and rotor diameter greater than 75 m

Load quantities	Level of importance
Blade flatwise bending moment distribution	2 blades mandatory additional blade recommended
Blade edgewise bending moment distribution	2 blades mandatory additional blade recommended
Blade root flatwise bending moment	2 blades mandatory other blade recommended
Blade root edgewise bending moment	2 blades mandatory other blade recommended
Blade torsional frequency and damping	Recommended
Pitch actuation loads	One blade mandatory
Tower top acceleration in normal direction	Mandatory when used for controller feedback
Tower top acceleration in lateral direction	Mandatory when used for controller feedback
Tower mid normal moment	Recommended
Tower mid lateral moment	Recommended
Tower top normal moment	Mandatory
Tower top lateral moment	Mandatory
Tower torque	Mandatory

6.4.3 Meteorological quantities

Table 11 lists the meteorological quantities to be measured in load measuring programmes.

Table 11 – Meteorological quantities

Quantity	Level of importance
Wind speed at hub height	Mandatory
Vertical wind shear (below hub height)	Mandatory
Vertical wind shear (above hub height)	Recommended
Vertical wind veer	Recommended
Upflow angle / flow inclination angle near hub height	Recommended
Turbulence intensity (horizontal) at hub height	Mandatory
Wind direction at hub height	Mandatory
Air density	Mandatory
Turbulence intensity (3D) at hub height	Recommended
Icing potential	Recommended
Atmospheric stability	Recommended

6.4.4 Wind turbine operation quantities

Table 12 lists the operation quantities to be measured.

Documents
Document Sharing Hub
Full document details: IEC 61400-13-2021

Table 12 – Wind turbine operation quantities

Quantity	Level of importance
Electrical power	Mandatory
Rotor speed or generator speed	Mandatory
Yaw misalignment	Mandatory
Rotor azimuth angle	Mandatory
Pitch position of all instrumented blades turbine controller output	Mandatory for all instrumented blades Recommended for all blades
Pitch speed	Mandatory
Brake status	Mandatory
Brake moment (if not possible, brake pressure) [a]	Recommended
Wind turbine status	Mandatory
NOTE Pitch speed can be derived from pitch position	
[a] If the mechanical braking device is part of the primary braking system (e.g. at stall controlled turbines), the measurement of the brake moment is mandatory.	

Turbine status information (for example, grid connection, emergency shutdown, protection system activation, etc.) is necessary in order to properly categorize recorded data.

Turbine status signals shall indicate online/offline and faulted/not-faulted conditions. In those cases where several operational modes (e.g. reduced noise mode, load control) are deployed during the load measurement campaign it is recommended to also acquire a signal to allow automatic detection of those different modes.

6.5 Turbine configuration changes

No changes that impact the test results should be made to the test turbine during the test. Any change that has been made to the turbine shall be reported by the manufacturer and shall be included in the test report.

The manufacturer shall classify the changes into the following categories:

1) Changes without any significant impact on loads

   Data from before and after the change can be used within the same database.

2) Changes with significant impact on loads

   a) Temporary changes: this data shall be excluded from the database.

   b) Persistent changes, even though they can be cross-simulated with the same simulation model after implementation of the same change in the model. These periods shall be segregated into a separate database.

   c) Changes that resolve a problem and actually bring the turbine into the state it should have been in before. This shall result in a re-start of the campaign.

The capture matrix requirements (see 6.3.5) shall be fulfilled with at least one configuration where no changes are made with significant impact on loads.

Documents
Document Sharing Hub
Full document details: IEC 61400-13-2021

7 Instrumentation

7.1 Load quantities

7.1.1 Types of sensors

A load sensor is a device that directly or indirectly measures the load experienced by a system or component. Typical devices include, but are not limited to:

- strain gauge bridges;
- load cells/torque tubes (including piezoelectric cells).

For wind turbines, it will seldom be possible to place a load cell in a main load path. For this reason, strain gauges applied to the structure are selected as the recommended type of sensor and thus the following subclauses focus on the use of electrical strain gauges. If alternative load sensors are used the requirements shall be adjusted accordingly. Load sensors are calibrated by applying quasi-static loads. It is important to realize that dynamic behaviour of the structure or component can modify this relationship so that the strain gauge will indicate gross internal loads rather than externally applied loads. In strain gauge application, it is particularly important to avoid wire temperature effects and cross-sensitivity and to ensure proper temperature compensation. Cross-sensitivity is the undesirable characteristic of a measurement system of being sensitive to different load sources, making it difficult or impossible for the system to differentiate between them. Full strain-gauge bridge designs offer good scope for reduction of cross-sensitivities and temperature effects and are to be preferred for most wind turbine applications. To allow for evaluation and correction of the temperature effects it is recommend to measure the surface temperature near strain gauge locations (see Annex I).

7.1.2 Choice of sensor location

In the process of selecting sensor positions for the measurement of gross structural loads, it is recommended to choose a location which

- has a high strain per unit load level;
- provides a linear relationship between stress and load;
- is in a region of uniform stress (i.e. is not subject to high stress/strain gradients, avoids localized stress raisers or concentrations);
- has space to apply sensors;
- allows temperature compensation;
- is made of isotropic material (for example, steel is preferable to composite materials);
- is made of material to which measurement devices can be easily fixed or bonded.

7.1.3 Measurement of blade root bending moments

Flatwise and edgewise bending moments shall be measured.

For handling, lightning and environmental protection, it is recommended that the sensors be mounted within the blades rather than on the outer surface, where convenient.

Strain gauge bridges should ideally be applied perpendicularly to a nearly cylindrical blade root, so that cross-sensitivities are minimized. Regardless of the mounting location, cross-sensitivity shall be measured, and shall be addressed (i.e. through correction or increased uncertainty). For ease of analysis, the set of gauges should be oriented in line with the blade coordinate system.

Documents
Document Sharing Hub
Full document details: IEC 61400-13-2021

7.1.4 Blade bending moment distribution

Blade bending moment distribution can be measured using additional sets of strain gauges located at a cross section at least 30 % or as far as practically possible up to 50 % of rotor radius. Other requirements from 7.1.2 and 7.1.3 also apply. For the bending moment distribution the used coordinate system shall be clearly defined.

7.1.5 Blade torsion frequency/damping

The blade first torsional frequency and damping can be estimated using strain measured with a half or full torsion strain-gauge bridge through operational modal analysis. Since neither the frequency nor the damping rely on absolute magnitude of the measurement, no calibration of this signal is required.

7.1.6 Measurement of rotor yaw and tilt moment

Asymmetrical rotor loads shall be measured on the primary load path as close to the rotor as possible.

The preferred method for the measurement of rotor yaw and tilt moments is through two perpendicular bending bridges on main shaft along with the hub azimuth position measurement. It is recommended that the main shaft strain gauges be positioned in line with the instrumented rotor blade.

On some machines, it may not be possible to apply strain gauges to the shaft. In such cases, it is required to install gauges for bending moments in the non-rotating system, either on the shaft-support or tower top.

7.1.7 Measurement of the rotor torque

The strain gauges for measuring the torque of the main shaft shall consist of a full bridge with pairs of gauges on opposite sides of the shaft. Using the bridge only on one spot of the shaft surface, shear due to bending and transverse load will be interpreted as torque. If torque measurements on the shaft are not possible, tower top bending gauges and nacelle yaw position are permitted. Power and rotor speed shall not be used as a substitute to measure rotor torque.

7.1.8 Measurement of tower base bending

The bending moments at the tower base shall be measured in two perpendicular directions for a tubular tower. Tower base bending moments shall be measured using full strain gauge bridges mounted in the lower 20 % of the tower height as close to the base flange as possible while avoiding disturbances from load introduction effects for the base flange, door, etc. As a rule of thumb, tower base gauges should be placed at least one tower diameter from any flange.

In the case of a guy-wire supported tower, the tower base measurements may be replaced with measurements above the guy-wire attachment point. If the guy ropes are the main structural elements then the force in each rope should be monitored.

A lattice tower will require strain measurements in all supporting legs to arrive at the resultant tower base load for all wind directions. A special assessment of the strain pattern in the lattice tower and the consequence for the measurements shall be performed.

7.1.9 Tower top bending moments

Tower top bending moments shall be measured using full strain gauge bridges mounted in the top 20 % of the tower as close to the tower top as possible while avoiding disturbances from load introduction effects. As a rule of thumb, tower top gauges should be placed at least one

AVA Documents
Document Sharing Hub
Full document details: IEC 61400-13-2021

tower top diameter below the tower top flange. If tower top bending moments are used to derive rotor torque and rotor tilt moment, the bending moment shall be measured as high up as reliable measurements can be taken.

7.1.10 Tower mid bending moments

Tower mid bending moments should be measured using full strain gauge bridges mounted in between 30 % and 70 % of the tower height. Caution should be taken to either take measurements one tower diameter away from any tower flange or address the effects from the flange on the measurements such stress concentrations or constraining thermal expansion of the tower wall material.

7.1.11 Tower torque

Tower torque shall be measured using full strain gauge bridges mounted in the top 20 % of the tower as close to the tower top as possible while avoiding disturbances from load introduction effects. As a rule of thumb, tower top gauges should be placed at least one tower top diameter below the tower top flange.

7.1.12 Tower top acceleration

Accelerometers should be used for measurement of tower top acceleration. The accelerometers shall be mounted on that part of the nacelle that yaws with the rotor. Care should be taken when selecting the accelerometers to account for their low-frequency phase shift and amplitude characteristics.

7.1.13 Pitch actuation loads (on hub side of pitch bearing)

The load (torque or force) that actuates the blade pitch shall be measured on the hub side of the pitch bearing. The load can be measured directly (i.e., strain gauges or load cells) or indirectly (i.e., actuator electric power and rpm or hydraulic pressure).

7.2 Meteorological quantities

7.2.1 Measurement and installation requirements

The requirements given in IEC 61400-12-1 shall be followed for the measurement and installation of all meteorological quantities. Turbulence intensity is defined as if measured through a hub height anemometer (sonic or cup). If other wind speed sensing techniques are used, the derived TI shall be equivalent to that measured by either a sonic or cup anemometer.

7.2.2 Icing potential

Icing potential can be measured through measurement of air temperature by itself or possibly combined with a measurement of relative humidity.

7.2.3 Atmospheric stability

The atmospheric stability can be measured by the difference between two vertically separated temperature measurements in addition to vertical wind shear measurement. As the temperature difference is small it is preferred to measure the temperature difference directly instead of measuring two temperatures independently.

Documents
Document Sharing Hub
Full document details: IEC 61400-13-2021

7.3 Wind turbine operation quantities

7.3.1 Electrical power

The turbine's electrical power output can be measured at any point as long as it properly described, measuring it in compliance with the IEC 61400-12-1 is recommended. Output from the wind turbine controller is acceptable.

7.3.2 Rotor speed or generator speed

Rotor speed can be measured on either the low-speed shaft or high-speed shaft. If rotor speed is measured on the low-speed shaft, additional consideration should be given to achieve a sufficiently high speed resolution. If rotor velocity is measured on the high-speed shaft, additional consideration should be given to assure the sample rate is high enough to acquire the signal. Output from the wind turbine controller is acceptable.

7.3.3 Yaw misalignment

Yaw misalignment shall be derived from wind direction and yaw position. Yaw position can come from the controller only if calibration verifications are performed regularly. Caution should be used on the 360° – 0° transition and the location of the dead band, if present. Other measurement techniques may be used, when it is documented that the accuracy and uncertainty of the measurement technique is equivalent or better to the measurement determined from wind direction and yaw position.

7.3.4 Rotor azimuth angle

Rotor azimuth angle shall be measured on the low-speed shaft, high-speed shaft (with reset on the low speed shaft) or provided by the wind turbine controller. If the controller signal is used, the latency shall be evaluated and addressed. Caution should be used on the 360° – 0° transition.

7.3.5 Pitch position

Blade pitch angle shall be measured directly by an encoder or provided by the wind turbine controller. If the controller signal is used, the latency shall be evaluated and addressed.

7.3.6 Pitch speed

The pitch speed shall be measured either directly or derived from pitch position during post-processing of the data.

7.3.7 Brake moment

How the brake moment is best measured depends on the turbine configuration. Examples are: verifying brake pressure (hydraulic or spring pressure) with assumed coefficient of friction, measuring on the torque reaction arm, by measuring shaft torque on both sides of the brake or through analysis of deceleration time.

7.3.8 Wind turbine status

Wind turbine status can be measured using controller signals (i.e., grid connection, emergency shutdown, protection system activation).

7.3.9 Brake status

Brake status shall be measured, either directly (i.e., proximity sensor) or indirectly (brake pressure or turbine controller; in which case latency needs to be evaluated).

Documents
Document Sharing Hub
Full document details: IEC 61400-13-2021

7.4 Data acquisition system

7.4.1 General

The DAS is used to acquire analog signals from one or more sources and convert these signals into digital form for analysis or transmission by end devices such as digital computers, recorders, or communications networks. The ability of the DAS to preserve signal accuracy and integrity is the main measure of the quality of the system. Details of DAS set up are provided in Annex G.

7.4.2 Resolution

The resolution of the A/D converter is the fundamental measure of system accuracy of the DAS. The number of bits in the A/D converter determines the resolution of the system. For the measurement of mechanical loads on wind turbines the DAS shall have a minimum resolution of 12 bits in the A/D converter.

7.4.3 Anti-aliasing

The DAS shall have aliasing protection on all load channels. The aliasing protection has two equally important purposes: the first is to prevent the creation of aliased frequency components in the specified frequency range and the second is to sample input waveforms with sufficient fidelity to support the test objective. Details of analog anti-aliasing methods are provided in Annex G.

For each analog channel in the measurement campaign, the following items shall be reported:

- A/D resolution;
- sampling frequency, F_s;
- anti-aliasing filter type or anti-aliasing strategy (if done digitally);
- cut-off frequency setting for the filter, F_c.

8 Determination of calibration factors

8.1 General

In general:

- The standard assumes linear calibrations. For the majority of situations this is valid. Any non-linear behaviour can be dealt with through application of non-linear calibration coefficients or by adding uncertainty in the measurements.
- All elements of the measurement chain shall be calibrated.
- Calibrations should be performed with the same instrumentation used to record the test data.

For several sensors, different methods are used for determination of the offset and the sensitivity.

The calibration process is the characterization of the measurement chain (sensor, cabling, electronics, etc.) to a known external standard. The choice of calibration method is largely determined by the choice of external standard and must take into account the following factors. The calibration method should:

- cover as much of the measurement range as possible;
- minimize disturbances;
- be repeatable;

Documents
Document Sharing Hub
Full document details: IEC 61400-13-2021

- be sufficient to determine both the slope, offset and, if necessary, the cross-talk of the signal.

The best way to ensure measurement accuracy is to measure the full channel response directly using an external reference that produces a known result. With this technique, all components along the data path are calibrated together and the accuracy of the full data path can be determined. For many types of measurements, it is not possible to directly calibrate the full measurement path simultaneously. The alternative requires system components to be calibrated separately.

The remainder of this clause describes the requirements for calibrations that are unique for mechanical loads testing.

8.2 Calibration of load channels

8.2.1 General

Subclause 8.2 describes the calibration methods for the load sensors in Table 13. More details for the calibration of loads channels are given in Annex H.

Several methods exist for calibration of the load sensors and it is recommended to use more than one calibration method in order to verify the calibration results. Suitable calibration methods are:

- use of gravity loads;
- analytical calibration;
- application of external loads.

The preferred method used for calibration is the one that leads to the lowest overall uncertainty and is a factor of:

- accuracy of used information;
- the load range covered by the calibration.

Additionally the feasibility and cost of the methods will impact which calibration method would be used.

All calibrations shall be conducted at low wind speeds in order to minimize aerodynamic loading of the wind turbine and at low and steady rotational speed in order to minimize inertia effects and aerodynamic forces.

In the case the gravity loads are used for calibration of a load sensor, the information used to derive the applied loads shall be provided by the manufacturer.

Table 13 – Summary of suitable calibration methods

Measured Quantity	Analytical	External load	Gravity
Blade bending moments		S	S, O
Main shaft torque[a]	S	S	
Main shaft bending	S	S	S, O
Tower bending moments	S	S	S, O
Tower torque[a]	S	S	
S = suitable for slope O = suitable for offset			
[a] For suitable methods for determining the offset, see 8.2.3.4 and 8.2.5.			

Documents
Document Sharing Hub
Full document details: IEC 61400-13-2021

8.2.2 Blade bending moments

8.2.2.1 Analytical

In general, the analytical calibration is not feasible for calibration of the blade bending moments as the material properties are not well known.

8.2.2.2 Gravity loads

Gravity calibration of the blade bending sensors requires knowledge of the blade mass moment at the instrumented cross section. It is achieved by exposing the sensor to a well-defined moment caused by gravity. This can be done by either idling the rotor at different pitch angles, or by fixing the blade in a horizontal position and pitching the blade to different pitch angles.

8.2.2.3 External loads

During a calibration of the blade bending moment sensors with external load a known load is applied at a known location along the blade and in a known direction.

8.2.3 Main shaft moments

8.2.3.1 Analytical calibration

Analytical calibration is done by scaling the sensor output to material strain by gauge factor, bridge configuration and measurement chain, and then scaling the measured strains to moments using cross section geometry and material properties.

An analytical calibration can be performed on shafts with near constant cross sectional properties and thus only for areas with minor stress concentration factors.

8.2.3.2 Gravity loads (bending only)

On rotating shafts the scaling factors can be determined from the overhang moment caused by the rotor at the gauge cross section during a slow rotor rotation. The sensitivity of the signal can be determined from the signal range. The offset of the signal can be determined from the azimuth averaged signals during the slow rotor rotation. As stated in 8.2 the expected moment range at the measurement location during a slow rotor rotation shall be provided by the turbine manufacturer.

8.2.3.3 External load

During a calibration through application of an external load, the scaling factors are determined by applying known moment on the main shaft (e.g. by pulling on a blade using a calibrated load cell) and recording the sensor's response to the applied moments.

If the external load can only be applied in one direction and the structure is geometrically symmetric, the obtained scaling factors can also be used for other directions (e.g. using the tilt moment on a non rotating shaft to calibrate the yaw moment on that same shaft).

8.2.3.4 Calibration of torque through power and rotor speed

Besides the earlier mentioned methods of applying an external load or performing an analytical calibration, the rotor torque can also be calibrated by measuring power output and rotor speed, taking the drive train efficiency and the turbine's power consumption into account.

The offset of the shaft torque signal can be determined by slow rotations at low wind speed below v_{in}.

Documents
Document Sharing Hub

Full document details: IEC 61400-13-2021

8.2.4 Tower bending moments

8.2.4.1 Gravity loads

Typically the nacelle and rotor have a centre of gravity that is not directly above the neutral axis of the tower. This offset causes a so called overhang moment which can be used for the calibration of the tower bending sensors.

Gravity calibration of the tower bending sensors requires knowledge of the machine head (nacelle and rotor) mass moment with regard to the tower axis[1] 360 degree yaw rotations of the nacelle will expose each sensor to the full negative and positive gravity moment during one revolution.

This method is mainly useful for the tower top sensors. At the tower bottom the gravity moment is usually too small in comparison to the operational loads to be used for calibration. In that case the method shall only serve for verification of the calibration.

8.2.4.2 Analytical

Analytical calibration is done by scaling the sensor output to material strain by gauge factor and strain gauge bridge configuration and then scaling the measured strains to moments using cross section geometry and material properties.

8.2.4.3 External loads

Alternatively the tower can be loaded by a known external load at a defined location and direction.

8.2.4.4 Offset

The offset of the tower bending sensors shall be derived from 360° yaw rotations during very low wind speed conditions. The average value of the sensor output during the yaw rotation is the offset value.

8.2.5 Tower torque

8.2.5.1 Analytical

Analytical calibration is done by scaling the sensor output to material strain by gauge factor, bridge configuration and measurement chain, and then scaling the measured strains to moments using cross section geometry and material properties. An analytical calibration can only be performed for areas with minor stress concentration factors.

8.2.5.2 External loads

During a calibration through application of an external load, the tower can be loaded by pulling on a blade with a known force at a defined location and direction.

8.2.5.3 Offset

The offset of the tower torque sensor can be derived from data acquired during low wind conditions with the turbine in parked state, or can also be derived from 360° yaw rotations during low wind speed conditions.

---

[1] Note that the gravity moment may be dependent on the blade pitch angle.

Documents
Document Sharing Hub

Full document details: IEC 61400-13-2021

8.3 Calibration of non-load channels

8.3.1 Pitch angle

Calibration of pitch angle is performed relative to a reference mark at the blade root (normally 0°), which can also be used as a reference for placing the blade bending sensors. All instrumented blades shall be pitched to at least 2 well defined positions at which the signal output and true angle can be correlated. The two positions should at least be 80° apart from each other. Calibration of the reference mark to a physical origin should be performed as well or alternatively this shall be traceable through documentation. If the pitch angle is measured through the turbine controller, checks shall be performed regularly to verify the slope and offset.

8.3.2 Rotor azimuth angle

The slope of the signal is typically derived by performing a few slow shaft rotations and scaling the signal range of the saw tooth shaped signal or number of pulses to match the 360 degree range or counting the number of pulses in a rotor revolution.

For the derivation of the offset a few methods are available using:

- a level on a defined surface on the shaft or hub,
- an inclinometer on a defined surface on the shaft or hub,
- rotor azimuth positions defined by applying the rotor lock,
- the blade bending moment signals and looking for the location of the maxima and minima during a slow rotor rotation.

8.3.3 Yaw angle

The yaw position of the nacelle can be calibrated by pointing the main shaft (which is often aligned with the nacelle) at distant landmarks and using the coordinates of the landmark and the wind turbine to calculate the bearing of the rotor. Care should be taken when using a magnetic compass. The same external reference and method (e.g. landmarks using map, landmarks using a global navigation satellite system magnetic north) and the same coordinate system shall be used for the calibration of wind direction and yaw angle.

8.3.4 Wind direction

The wind direction can be calibrated by pointing the wind vane at distant landmarks and using the coordinates of the landmark and the wind vane to calculate the bearing of the vane, or by aligning the vane to the boom and determining the direction of the boom after final installation. Care should be taken when using a magnetic compass. The same external reference and method (e.g. landmarks using map, landmarks using a global navigation satellite system, magnetic north) and the same coordinate system shall be used for the calibration of wind direction and yaw angle.

8.3.5 Pitch actuation loads

The calibration method of pitch actuation loads depends on the method used to measure it. If the load is measured through:

- strain gauges, an analytical calibration shall be used for the derivation of the sensitivity. For derivation of the offset value, measurements shall be taken in low wind conditions with the turbine at a standstill and the blade pointing vertically down;
- current, calibrated instruments shall be used for the sensitivity and offset;
- pressure, calibrated instruments shall be used in combination with the actuator geometry for derivation of sensitivity and offset;

Documents
Document Sharing Hub
Full document details: IEC 61400-13-2021

- controller signals, the sensitivity used by the controller shall be used. The offset value shall be derived in low winds, with the turbine at a standstill and the blade vertically down.

8.3.6 Brake moment

The calibration method for the brake moment depends on the method used to measure it. If the load is measured through:

- strain gauges, an analytical calibration shall be used for the derivation of the sensitivity. For derivation of the offset value measurements shall be used when the brake is not applied;
- pressure, calibrated instruments shall be used in combination with an assumed coefficient of friction.

9 Data verification

9.1 General

Data verification serves two purposes:

- To assure that the signals are being measured correctly (e.g. correct calibration factor applied etc.). The results of this verification shall be reported in the test report.
- To verify that the acquired data remains valid and problems are identified quickly. For these checks only the verification checks that were used (not their results) and their frequency shall be reported in the test report.

The validity of the measured quantities as well as of the calculated quantities, for example the resulting rotor loads from shaft bending moment measurements, shall be checked in order to exclude any erroneous recordings. Only valid data shall be used in further analysis.

In general, data shall be rejected if they do not meet criteria related to sensor calibration, sensor operational ranges and noise.

The first stage verification of measured time series should be performed during commissioning of the measuring programme and is based on recordings at the specified or higher sampling rates. It is recommended to perform cross checks against simulation results at this stage.

If valid data were recorded under abnormal conditions (turbine or environmental, such as ice on the blades or an extreme direction change in the wind), they should be segregated into a special category for possible further analysis and not be part of the capture matrix for normal operation.

Any data filter or rejection criteria shall be clearly documented in the load measurement report.

During the measurement period, data shall be periodically checked in order to ensure high quality and repeatability of the test results.

9.2 Verification checks

9.2.1 General

Subclause 9.2 provides requirements and recommendation of verification checks that can be used to fulfil the data verification requirements.

The following checks are applicable to all measured quantities:

Documents
Document Sharing Hub
Full document details: IEC 61400-13-2021

- Measurement values outside operational limits of sensors, data transmission and acquisition system shall be excluded.
- Special attention should be paid in cases of extreme weather or operating conditions.
- Valid data shall be based on suitable calibrations as described in Clause 8. The first part of the data verification is a formal check that calibrations have been carried out correctly.
- Sensor drift may be identified from measured data statistics. If the offset of a sensor is drifting, the normal operation data can become scattered or show two or more trend lines when plotting the ten minute mean values as a function of wind speed. Zero drift due to temperature shall be checked, documented and accounted for. If any data correction is applied, it shall be reported and taken into account during uncertainty estimations. Drift is best identified by monitoring signal levels in low wind speed conditions (also see Annex I).
- Erroneous application of sensor calibration constants: attention should be paid in cases where changes in sensors, amplification or acquisition settings are made during the measuring period.
- The frequency contents of signals should be checked to assure the proper frequencies show up (eigenfrequencies, frequencies related to rotational speed) and to get an indication of the signal to noise ratio and if applicable the noise source.
- Presence of noise: valid data should not be affected by noise to such an extent that the target signal/noise relationship is not met for any significant frequency of the relevant signal. Corrective actions may be essential in order to compensate for presence of noise.
- Data shall be verified for presence of spikes. For each measuring channel a threshold shall be defined that will characterize a spike attributed to noise. Isolated spikes may be recovered by using the two adjacent valid measurements and an interpolation formula. Records including numerous isolated spikes or unrecoverable adjacent spikes should be rejected. If spikes are removed from the data series, the procedure shall be recorded. Data sets where spikes have been detected shall not be used for the summary statistics of that channel, unless the spikes have been corrected.
- Data shall be inspected for presence of flat spots/ drop outs. Rejection criteria will vary for each signal.
- Unrealistic differences between comparable quantities: in several cases a comparison of the recordings of the two independent sensor sets shall be made. If unexplainable differences are observed, the instrumentation shall be re-checked and the suspect data should be excluded.
- Data time series may be accepted as valid even though some channels are not valid, provided such other channels are not listed as mandatory quantities in Table 9, Table 11 and Table 12. These data sets can thus be used to fulfil the capture matrix requirements.

9.2.2 Blade moments

Below are examples of verification checks for blade moments:

- The bending moments should correspond to the gravity moments when the wind turbine is idling at low wind speed.
- If the bending moment of more than one blade is measured, the bending moments of the different blades at the same radius from the hub centre should have the same ten minute mean and standard deviation.
- Below rated wind speed, the sum of the ten minute mean values of the in-plane bending moments at the blade roots times a factor dependent on the rotor diameter and strain gauge location should be close to the main shaft torque:

$$M_{\mathrm{x}} \approx \frac{R}{R - 1{,}5 \cdot R_{\mathrm{g}}} \frac{B}{L} \cdot \sum_{i=1}^{L} M_{\mathrm{bl},i} \tag{3}$$

Documents
Document Sharing Hub
Full document details: IEC 61400-13-2021

where

M_x is the ten minute mean main shaft torque (Nm);

$M_{bi,i}$ is the ten minute mean in-plane blade rootbending moment of blade i (Nm);

B is the number of blades on the wind turbine;

L is the number of blades instrumented for blade root bending moments;

R is the rotor radius (m);

R_g is the radius of strain gauge location (m).

This equation assumes the centre of aerodynamic force to act at 2/3R.

- During a slow rotor rotation the phase of the blade signal should correspond with the sequence of the blades.
- During a pitch sweep the phasing of the blade signals should match the circumferential position of the gauges used for the measurements.

9.2.3 Main shaft

Below are examples of verification checks for main shaft signals:

- The power output can be checked against the main shaft torque signal at rated power. Using the following equation:

$$P = M_x \cdot \Omega \cdot \eta \tag{4}$$

  where

  M_x is the main shaft torque (Nm);

  Ω is the rotor speed (rad/s);

  η is the efficiency of the components between point of main shaft torque measurement and point of power measurement.

- The two bending moments in the main shaft, 90° azimuth phase apart, should have the same mean and amplitude when the wind turbine is idling at low wind speed. The mean values of the two bending moments in the main shaft should be close to zero when the wind turbine is idling at low wind speed. The phase difference between the signals in the rotating frame should correspond to the angle between the two strain gauge bridges.
- The yaw moment at the main shaft and the tower top torque should be close to each other. Respectively the tilt moment at the main shaft and the equivalent tilt moment at the tower top should follow the same trends while the tower top lateral moment should be close to the main shaft torque signal.

9.2.4 Tower

Below are examples of verification checks for tower signals:

- A yaw rotation at low wind speed (<4 m/s) should be performed at intervals. The two bending moments in the tower at the same level, should show data with an approximate sinusoidal shape (offset by some angle) that should have the same mean and amplitude when the wind turbine is yawing through 360° at low wind speed. The amplitude should represent the rotor overhang moment of the machine. The mean values of the two bending moments in the tower should be close to zero when the wind turbine is yawing through 360° at low wind speed. The yaw position at which the maximum and minimum of each bending signal occurs should correspond to the circumferential location of the strain gauges.

  A time series containing a yaw rotation can be used to verify the correctness of the coordinate transformation of the tower bending moments. All bending moments in the

Documents
Document Sharing Hub
Full document details: IEC 61400-13-2021

nacelle coordinate frame should be relatively constant, one transformed signal should be close to zero and the other should be equal to the rotor overhang moment of the machine.

- The C_t versus wind speed curve may be checked for realistic values.

10 Processing of measured data

10.1 General

Clause 10 describes the post processing requirements used to derive the results that shall be reported. Specifically, the following are discussed: time series analysis, summary load statistics, load spectra based on rainflow counted ranges and estimation of equivalent loads.

One of the first steps in data processing may be to calculate the required measurement quantities from the measured signals (i.e. air density from temperature and pressure or non rotating rotor loads from rotating signals). The post processing that is described below will be performed on the required measured quantities and not necessarily the measured signals.

10.2 Fundamental load quantities

The basic product of a measurement loads campaign is the calibrated and validated time series data. However, these time series shall be post-processed to provide summary statistics, damage equivalent loads and cumulative rainflow spectra to provide an index to the actual data sets.

For the fundamental load quantities (Table 9), the following shall be computed for all normal operation data sets:

- the 10-minute file statistics (minimum, maximum, mean and standard deviation);
- the binned 10-minute statistics for each wind speed bin of the capture matrix;
- the 10-minute damage equivalent load for a single fatigue exponent;
- the cumulative rainflow spectrum for all normal operation data sets.

10.3 Load quantities for larger turbines

For turbines with a rated power output greater than 1 500 kW and rotor diameter greater than 75 m, the additional measurement quantities in Table 10 also need to be post-processed. For the additional load quantities, the required analysis from 10.2 shall be applied.

The non-load quantities such as blade torsional frequency and damping, tower top normal (also commonly referred to as fore-aft or downwind) acceleration and tower top lateral (also commonly referred to as side-to-side or crosswind) acceleration are concerned mainly with dynamics, so post-processing may be limited to:

- the 10-minute standard deviation of the signal,
- the mean of the binned 10-minute standard deviations for each wind speed bin of the capture matrix,
- the identification of turbine natural frequencies using PSD of example data sets during operation/idling/transient event.

10.4 Wind speed trend detection

Slow variation in wind speed, for example steady increase in wind speed during a 10-minute data set is not part of common simulated wind field models and results in non-representative high turbulence intensity. In this case the correlation between loads and turbulence intensity may be misleading. Trended data sets shall not be rejected, nor shall the wind speed be detrended. Parameters indicating the degree of wind speed trending shall be reported.

Documents
Document Sharing Hub
Full document details: IEC 61400-13-2021

Methods for detecting trended data shall be based on a form of high pass filtering to detect the influence on the turbulence intensity caused by low frequency wind speed changes. Any detection method used shall be described in detail in the report.

Annex F provides examples of different trend detection methods and the parameters that can be calculated to indicate if data sets contain wind speed trends.

Similar effects may also appear for other meteorological quantities (such as wind shear, wind veer). Further data which are not reproducible in simulation such as yaw activity etc. have to be taken into account. The manufacturer shall include all of these effects for proper correlation between measurement and simulation data in the course of model validation.

10.5 Statistics

For each ten minute file the ten minute statistics (mean, maximum, minimum and standard deviation) shall be calculated for all signals.

For signals that are angular measurements that pass through the 360° – 0° transition, (nacelle yaw position, hub azimuth position, wind direction), the direction of the unit vector average should be used to compute the mean of the signal and special care should be taken to ensure that there are no data points sampled during a 360° – 0 ° transition.

10.6 Rainflow counting

To determine damage equivalent loads (DEL) and the cumulative rainflow spectra, the load quantity time series shall be rainflow counted. For this standard only the ranges shall be used and means shall be ignored in further post processing.

The used method shall be clearly reported along with the used parameters including:

- reference to the applied rainflow cycle counting method,
- number of used range bins,
- use and value of minimum range threshold.

The number of divisions of the load range shall be at least 100 in order to achieve sufficient resolution. Remaining half cycles shall be counted as 0,5.

10.7 Cumulative rainflow spectrum

The rainflow cycle counts of individual 10-minute records shall be assembled to form a single cumulative rainflow spectrum for power production for each load quantity. The cumulative rainflow spectrum is determined by summing all the individual rain flow cycle counts of each file in the power production capture matrix. This spectrum is not intended to estimate the fatigue life of the turbine, thus no wind speed or turbulence weighting is applied, nor is the design life of the turbine used.

10.8 Damage equivalent load

The equivalent load is the weighted average rainflow range, with the S-N-curve slope, m, for the relevant material as the weighting exponent. Material fatigue properties are assumed to be described by a log-log formulation such as

$$N = C \cdot S^{-m} \tag{5}$$

where

N is the number of cycles to failure at load range level S;

Documents
Document Sharing Hub
Full document details: IEC 61400-13-2021

C and m are material properties.

The S-N-curve slope, m, should represent the relevant materials, for example, values of 3 or 5 for welded steel, 6 or 8 for nodular cast iron, and 10 or 12 for glassfibre-reinforced plastic.

The 1 Hz damage equivalent load for a ten minute time series is defined by the expression:

$$R_{\text{eq}} = \left(\sum R_i^{\,m} \cdot n_i \,/\, 600\right)^{1/m} \tag{6}$$

where

R_{eq} is the 1 Hz ten minute damage equivalent load;

R_i is the load of the ith range bin of the fatigue load spectrum;

n_i is the number of cycles in the ith range bin of the fatigue load spectrum;

m is the S-N-curve slope for the relevant material.

10.9 Wind speed binning

Statistical data may be further processed by applying the "method of bins", using 1,0 m/s bins and by calculation of the mean values of the wind speed and the mean values of the parameters in question for each wind speed bin according to the equations:

$$v_i = \frac{1}{N_i} \sum_{j=1}^{N_i} v_{i,j}$$

$$x_i = \frac{1}{N_i} \sum_{j=1}^{N_i} x_{i,j} \tag{7}$$

where

v_i is the bin averaged wind speed in wind speed bin i;

$v_{i,j}$ is the ten minute averaged wind speed of data set j in wind speed bin i;

x_i is the bin averaged variable in question in wind speed bin i;

$x_{i,j}$ is the ten minute averaged variable of data set j in wind speed bin i;

N_i is the number of 10 min data sets in wind speed bin i.

The standard deviation of the means is calculated by:

$$\sigma_{x_i} = \sqrt{\frac{1}{N_i} \sum_{j=1}^{N_i} \left(x_{i,j} - x_i\right)^2} \tag{8}$$

where

σ_{xi} is the standard deviation of the mean in wind speed bin i.

The minimum of minimums is calculated by taking the lowest ten minute minimum of all data sets in the bin.

The maximum of maximums is calculated by taking the highest ten minute maximum of all data sets in the bin.

Documents
Document Sharing Hub
Full document details: IEC 61400-13-2021

10.10 Power spectral density

PSD calculations shall be performed on the load quantities in Table 9 for the dynamic measurement load cases. The following information on the analysis shall be reported:

- reference to the PSD algorithm used;
- frequency resolution;
- number of lines in the spectrum;
- windowing type;
- length of applied window;
- averaging and/or overlapping.

11 Uncertainty estimation

The uncertainties for all reported quantities shall be evaluated and reported. The uncertainty evaluation shall consider all relevant sources of uncertainty which occur in the measurement results.

Depending on the considered signal, uncertainties can be introduced by the sensor itself, installation effects, calibration, signal conditioning, data acquisition system, or other sources.

Attention should be paid to calculated channels which combine multiple signals. Here all associated signals have to be taken into account, and their combined uncertainty should be considered.

Guidance on, and an example of how to estimate uncertainties is provided in Annex B.

The uncertainties of the meteorological quantities and the electrical power should be evaluated according to IEC 61400-12-1.

12 Reporting

The results of the mechanical loads test shall be reported in a report containing the following information:

1) Introduction including:
   a) test objective;
   b) test period.
2) An identification and description of the specific wind turbine configuration under test, including:
   a) turbine make, type, serial number, production year;
   b) rotor diameter;
   c) rotor speed or rotor speed range;
   d) blade data: make, type, serial numbers, number of blades, fixed or variable pitch, and pitch angle(s), presence of vortex generators, stall strips, serrated trailing edges etc.;
   e) hub height and tower type;
   f) description of control system (device and software version);
   g) photograph of test turbine;
   h) any changes made to the test turbine during the test period classified per 6.5.
3) A description of the test site, including

Documents
Document Sharing Hub
Full document details: IEC 61400-13-2021

a) photographs of all measurement sectors preferable taken from the wind turbine at hub height;

b) geographical location with sufficiently detailed information to allow the reader to locate the test machine;

c) test site map showing the surrounding area covering a radial distance of at least 20 times the wind turbine rotor diameter and indicating the topography, location of the wind turbine, meteorological mast, significant obstacles, other wind turbines and measurement sector;

d) if the measurement sector is expanded beyond the one found using the methods in the IEC 61400-12-1 per 6.2, provide evidence that shows that the wind speed and TI measured at the meteorological tower are representative of those seen by the wind turbine;

e) if site calibration is performed, the site calibration results including the limits of the final measurement sector and the rationale for any changes from the results of the site assessment.

4) Channel list.

5) Coordinate system used for the test.

6) Instrumentation

a) description of data acquisition system (sample rate, filters, synchronization if applicable);

b) for each channel:

i) details of instrumentation (make, model, serial number);

ii) details on signal conditioning;

iii) for each instrument, its actual location and orientation, mounting details;

iv) the slope, offset, their derivation method and calculation;

v) calibration data (actual measured data or calibration sheet cover page, end to end checks); for loads channels also the inputs used for the calibration and their sources (e.g. manufacturer or measured);

vi) any changes made to the instrumentation or calibration during the test period covered in the report.

7) Data verification checks per requirements of 9.1.

8) Data rejection criteria (measurement sector, turbine status signals)
Data classification (criteria for data to go in different capture matrices).

9) Post processing methods, such as:

a) filtering during post processing;

b) despiking;

c) description of calculated channels (tower fore-aft from tower bending and yaw position etc.);

d) rainflow cycle counting method;

e) wind speed trend detection method;

f) any additional data treatment.

10) Results. At a minimum the following results shall be included in the test report (except where marked as optional):

a) for the test period:

i) plots of meteorological conditions as a function of time (ten minute means)

a) wind speed (for example Figure C.1);

b) wind direction;

c) TI;

Documents
Document Sharing Hub

Full document details: IEC 61400-13-2021

d) air density;

e) wind shear;

ii) TI as a function of wind speed (as measured, for example Figure C.2);

iii) TI detrended and as-measured as function of wind speed (ratio, difference or both; for example Figure C.3);

iv) scatter plot of meteorological conditions as a function of wind direction (ten minute averages)

a) wind speed;

b) TI;

c) shear;

b) for normal power production:

i) capture matrix per 6.3.5 (example given in Figure C.4);

ii) 60 second long time series of meteorological quantities (mandatory signals in Table 11), turbine operational quantities (mandatory signals in Table 12) and 7 key loads identified in Table 9 at partial load, near v_r and above v_r (for example see Figure C.5 and Figure C.6);

iii) scatter plots (ten minute maxima, minima, mean, standard deviation and DEL's (loads only) as a function of mean hub height wind speed) of meteorological conditions (mandatory signals in Table 11), turbine operational data (mandatory signals in Table 12) and fundamental loads (Table 9), with binned values on top of the scatter plots (mean of means) (example given in Figure C.7);

iv) frequency spectra indicating the frequencies values of found peaks in the spectrum (see 10.10 and Figure C.8) with indication of rpm or 1P;

v) cumulative rainflow spectrum for fundamental loads in Table 9 (example given in Figure C.9);

vi) table with mean of means, maximum of ten minute maxima, minimum of ten minute minima and bin averaged damage equivalent loads for wind speed in 1 m/s bins for all meteorological signals (mandatory signals in Table 11, all turbine operational quantities) mandatory signals in Table 12 and all fundamental loads quantities (Table 9) (optional) (example given in Table C.1);

vii) plots of binned C_t and C_p as a function of wind speed (optional);

viii) items above for any other mandatory signals in Table 10;

c) for transient events:

i) capture matrices, including reference to the file identifier containing the events (example given in Table C.2);

ii) for one of each type of event: time series of mandatory meteorological, turbine operational quantities and fundamental load quantities identified in Tables 9, 11 and 12 (example given in Figure C.10 and C.11);

iii) table with statistics of each channel during the transient (recommended) (example given in Table C.3);

d) parked conditions:

i) capture matrix linking to filenames;

ii) time series (600 s instead of 60 s) one example for each target yaw misalignment;

e) dynamic measurement load cases:

i) spectra for each DLC for the targeted load quantities;

f) for turbines with a rated power output greater than 1 500 kW and rotor diameter greater than 75 m the reporting requirements for the additional mandatory load quantities are the same as for those identified above for the signals in Table 9.

11) Uncertainty per the requirements of Clause 11

Documents
Document Sharing Hub

Full document details: IEC 61400-13-2021

a) for measured quantities:

   i) a table of values of the uncertainty sources that were used in the estimation of the total standard uncertainty of the quantity (for example see Table B.1 in Annex B);

   ii) a statement of the total standard uncertainty of the measured quantity (percentage and constant);

b) for binned results:

   i) a table with the total standard uncertainty for the bin-averaged value of the measured quantity as a function of bin-average wind speed;

   ii) a table with the total standard uncertainty for the bin-averaged value of the DEL of the measured quantity as a function of bin averaged wind speed;

c) for damage equivalent loads and cumulative rainflow spectra:

   i) the statement of the total standard uncertainty of the ten minute DEL for the measured quantity (percentage only);

   ii) uncertainty of the cumulative rainflow spectrum (percentage on the ranges).

12) Deviations from the standard.

13) References.

It is recommended that the information from items 4) through 6) are made available early in the measurement campaign as an instrumentation and calibration report.

Documents
Document Sharing Hub

Full document details: IEC 61400-13-2021

Annex A
(informative)

Example co-ordinate systems

A.1 General

All co-ordinate systems are right-handed Cartesian systems.

A.2 Blade co-ordinate system

The blade co-ordinate system is fixed to the blade. In general, its origin is the centre of the blade flange (see Figure A.1).

z_b-axis Parallel with the pitch (longitudinal blade) axis, pointing towards the blade tip.

y_b-axis Parallel to the zero pitch line at the blade root, supplied by the blade manufacturer and pointing towards the trailing edge. If this line is non-existent, then the y_b-axis is parallel to the chord line at 70 % of the blade span, pointing towards the trailing edge.

x_b-axis Defined such that the system $x_b\, y_b\, z_b$ is right-handed.

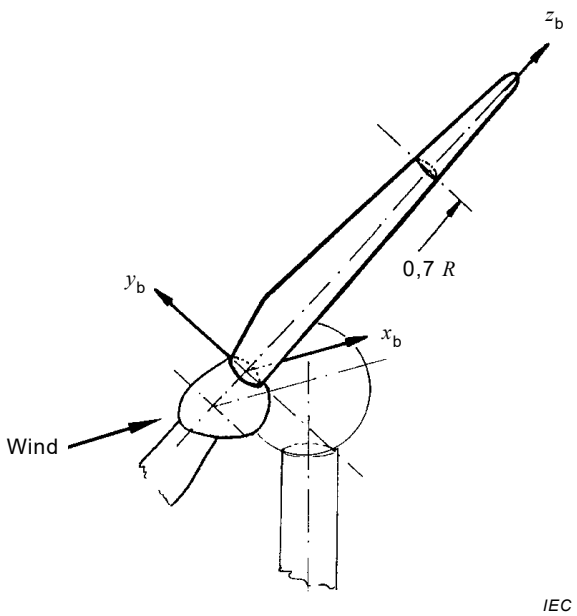

Figure A.1 – Blade co-ordinate system

A.3 Hub co-ordinate system

To transform the blade co-ordinates into the hub co-ordinate system, the cone and the pitch angles and the distance between blade flange and rotor centre have to be taken into account. One blade should be chosen as the reference blade.

The hub co-ordinate system rotates with the main shaft. The origin is on the main shaft in the plane perpendicular to the main shaft that contains the blade co-ordinate origin of the reference blade (see Figure A.2).

x_h-axis Parallel to the main shaft, positive in the downwind direction.

Documents
Document Sharing Hub
Full document details: IEC 61400-13-2021