# IEC 61534-22

Edition 2.0 2014-06

# INTERNATIONAL STANDARD

# NORME INTERNATIONALE

## Powertrack systems –
## Part 22: Particular requirements for powertrack systems intended for onfloor or underfloor installation

## Systèmes de conducteurs préfabriqués –
## Partie 22: Exigences particulières pour les systèmes de conducteurs préfabriqués destinés au montage sur le sol ou sous le sol

IEC 61534-22:2014-06(en-fr)

Documents
Document Sharing Hub
Full document details: IEC 61534-22 2014

**THIS PUBLICATION IS COPYRIGHT PROTECTED**

**Copyright © 2014 IEC, Geneva, Switzerland**

All rights reserved. Unless otherwise specified, no part of this publication may be reproduced or utilized in any form or by any means, electronic or mechanical, including photocopying and microfilm, without permission in writing from either IEC or IEC's member National Committee in the country of the requester. If you have any questions about IEC copyright or have an enquiry about obtaining additional rights to this publication, please contact the address below or your local IEC member National Committee for further information.

Droits de reproduction réservés. Sauf indication contraire, aucune partie de cette publication ne peut être reproduite ni utilisée sous quelque forme que ce soit et par aucun procédé, électronique ou mécanique, y compris la photocopie et les microfilms, sans l'accord écrit de l'IEC ou du Comité national de l'IEC du pays du demandeur. Si vous avez des questions sur le copyright de l'IEC ou si vous désirez obtenir des droits supplémentaires sur cette publication, utilisez les coordonnées ci-après ou contactez le Comité national de l'IEC de votre pays de résidence.

IEC Central Office
3, rue de Varembé
CH-1211 Geneva 20
Switzerland

Tel.: +41 22 919 02 11
Fax: +41 22 919 03 00
info@iec.ch
www.iec.ch

**About the IEC**
The International Electrotechnical Commission (IEC) is the leading global organization that prepares and publishes International Standards for all electrical, electronic and related technologies.

**About IEC publications**
The technical content of IEC publications is kept under constant review by the IEC. Please make sure that you have the latest edition, a corrigenda or an amendment might have been published.

**IEC Catalogue - webstore.iec.ch/catalogue**
The stand-alone application for consulting the entire bibliographical information on IEC International Standards, Technical Specifications, Technical Reports and other documents. Available for PC, Mac OS, Android Tablets and iPad.

**IEC publications search - www.iec.ch/searchpub**
The advanced search enables to find IEC publications by a variety of criteria (reference number, text, technical committee,…). It also gives information on projects, replaced and withdrawn publications.

**IEC Just Published - webstore.iec.ch/justpublished**
Stay up to date on all new IEC publications. Just Published details all new publications released. Available online and also once a month by email.

**Electropedia - www.electropedia.org**
The world's leading online dictionary of electronic and electrical terms containing more than 30 000 terms and definitions in English and French, with equivalent terms in 14 additional languages. Also known as the International Electrotechnical Vocabulary (IEV) online.

**IEC Glossary - std.iec.ch/glossary**
More than 55 000 electrotechnical terminology entries in English and French extracted from the Terms and Definitions clause of IEC publications issued since 2002. Some entries have been collected from earlier publications of IEC TC 37, 77, 86 and CISPR.

**IEC Customer Service Centre - webstore.iec.ch/csc**
If you wish to give us your feedback on this publication or need further assistance, please contact the Customer Service Centre: csc@iec.ch.

---

**A propos de l'IEC**
La Commission Electrotechnique Internationale (IEC) est la première organisation mondiale qui élabore et publie des Normes internationales pour tout ce qui a trait à l'électricité, à l'électronique et aux technologies apparentées.

**A propos des publications IEC**
Le contenu technique des publications IEC est constamment revu. Veuillez vous assurer que vous possédez l'édition la plus récente, un corrigendum ou amendement peut avoir été publié.

**Catalogue IEC - webstore.iec.ch/catalogue**
Application autonome pour consulter tous les renseignements bibliographiques sur les Normes internationales, Spécifications techniques, Rapports techniques et autres documents de l'IEC. Disponible pour PC, Mac OS, tablettes Android et iPad.

**Recherche de publications IEC - www.iec.ch/searchpub**

La recherche avancée permet de trouver des publications IEC en utilisant différents critères (numéro de référence, texte, comité d'études,…). Elle donne aussi des informations sur les projets et les publications remplacées ou retirées.

**IEC Just Published - webstore.iec.ch/justpublished**

Restez informé sur les nouvelles publications IEC. Just Published détaille les nouvelles publications parues. Disponible en ligne et aussi une fois par mois par email.

**Electropedia - www.electropedia.org**

Le premier dictionnaire en ligne de termes électroniques et électriques. Il contient plus de 30 000 termes et définitions en anglais et en français, ainsi que les termes équivalents dans 14 langues additionnelles. Egalement appelé Vocabulaire Electrotechnique International (IEV) en ligne.

**Glossaire IEC - std.iec.ch/glossary**
Plus de 55 000 entrées terminologiques électrotechniques, en anglais et en français, extraites des articles Termes et Définitions des publications IEC parues depuis 2002. Plus certaines entrées antérieures extraites des publications des CE 37, 77, 86 et CISPR de l'IEC.

**Service Clients - webstore.iec.ch/csc**

Si vous désirez nous donner des commentaires sur cette publication ou si vous avez des questions contactez-nous: csc@iec.ch.

Documents
Document Sharing Hub

Full document details: IEC 61534-22 2014

# IEC 61534-22

Edition 2.0 2014-06

# INTERNATIONAL STANDARD

# NORME INTERNATIONALE

## Powertrack systems –
## Part 22: Particular requirements for powertrack systems intended for onfloor or underfloor installation

## Systèmes de conducteurs préfabriqués –
## Partie 22: Exigences particulières pour les systèmes de conducteurs préfabriqués destinés au montage sur le sol ou sous le sol

INTERNATIONAL
ELECTROTECHNICAL
COMMISSION

COMMISSION
ELECTROTECHNIQUE
INTERNATIONALE

PRICE CODE
CODE PRIX S

ICS 29.060.10, 29.120.20

ISBN 978-2-8322-1656-9

**Warning! Make sure that you obtained this publication from an authorized distributor.**
**Attention! Veuillez vous assurer que vous avez obtenu cette publication via un distributeur agréé.**

® Registered trademark of the International Electrotechnical Commission
Marque déposée de la Commission Electrotechnique Internationale

Documents
Document Sharing Hub

Full document details: IEC 61534-22 2014

CONTENTS

FOREWORD ..... 3
1 Scope ..... 5
2 Normative references ..... 5
3 Terms and definitions ..... 5
4 General requirements ..... 6
5 General notes on tests ..... 6
6 Ratings ..... 6
7 Classification ..... 6
8 Marking and documentation ..... 7
9 Construction ..... 8
10 Clearances, creepage distances and solid insulation ..... 9
11 Protection against electric shock ..... 9
12 Terminals and terminations ..... 9
13 Screws, current-carrying parts and connections ..... 9
14 Mechanical strength ..... 9
15 Insulation resistance test and dielectric strength test ..... 17
16 Normal operation ..... 17
17 Temperature rise ..... 17
18 Short-circuit protection and short-circuit withstand strength ..... 17
19 Resistance to heat ..... 17
20 Fire hazard ..... 17
21 External influences ..... 18
22 Electromagnetic compatibility ..... 18
Annex AA (informative) Illustrations of underfloor and onfloor installations ..... 19
Annex BB (normative) Additional test requirements for PT systems already complying with IEC 61534-22: 2009 ..... 21

Figure 101 – External load test ..... 10
Figure 102 – Traffic load test for flushfloor service units applied to a small surface area 13
Figure 103 – Traffic load test for flushfloor service units applied to a large surface area 15
Figure 104 – Test arrangement for fixing apparatus mounting device according to 14.101.6.1 ..... 16
Figure AA.1 – Illustrations of underfloor installations ..... 19
Figure AA.2 – Example of installation onfloor ..... 20

Documents
Document Sharing Hub

Full document details: IEC 61534-22 2014

INTERNATIONAL ELECTROTECHNICAL COMMISSION

# POWERTRACK SYSTEMS –

## Part 22: Particular requirements for powertrack systems intended for onfloor or underfloor installation

## FOREWORD

1) The International Electrotechnical Commission (IEC) is a worldwide organization for standardization comprising all national electrotechnical committees (IEC National Committees). The object of IEC is to promote international co-operation on all questions concerning standardization in the electrical and electronic fields. To this end and in addition to other activities, IEC publishes International Standards, Technical Specifications, Technical Reports, Publicly Available Specifications (PAS) and Guides (hereafter referred to as "IEC Publication(s)"). Their preparation is entrusted to technical committees; any IEC National Committee interested in the subject dealt with may participate in this preparatory work. International, governmental and non-governmental organizations liaising with the IEC also participate in this preparation. IEC collaborates closely with the International Organization for Standardization (ISO) in accordance with conditions determined by agreement between the two organizations.
2) The formal decisions or agreements of IEC on technical matters express, as nearly as possible, an international consensus of opinion on the relevant subjects since each technical committee has representation from all interested IEC National Committees.
3) IEC Publications have the form of recommendations for international use and are accepted by IEC National Committees in that sense. While all reasonable efforts are made to ensure that the technical content of IEC Publications is accurate, IEC cannot be held responsible for the way in which they are used or for any misinterpretation by any end user.
4) In order to promote international uniformity, IEC National Committees undertake to apply IEC Publications transparently to the maximum extent possible in their national and regional publications. Any divergence between any IEC Publication and the corresponding national or regional publication shall be clearly indicated in the latter.
5) IEC itself does not provide any attestation of conformity. Independent certification bodies provide conformity assessment services and, in some areas, access to IEC marks of conformity. IEC is not responsible for any services carried out by independent certification bodies.
6) All users should ensure that they have the latest edition of this publication.
7) No liability shall attach to IEC or its directors, employees, servants or agents including individual experts and members of its technical committees and IEC National Committees for any personal injury, property damage or other damage of any nature whatsoever, whether direct or indirect, or for costs (including legal fees) and expenses arising out of the publication, use of, or reliance upon, this IEC Publication or any other IEC Publications.
8) Attention is drawn to the Normative references cited in this publication. Use of the referenced publications is indispensable for the correct application of this publication.
9) Attention is drawn to the possibility that some of the elements of this IEC Publication may be the subject of patent rights. IEC shall not be held responsible for identifying any or all such patent rights.

International Standard IEC 61534-22 has been prepared by subcommittee 23A: Cable management systems, of IEC Technical Committee 23: Electrical accessories.

This second edition cancels and replaces the first edition published in 2009. This edition constitutes a technical revision.

This edition includes the following significant technical changes with respect to the previous edition:

- Clauses 18 to 22 have been adapted to IEC 61534-1:2011 and include short-circuit test requirements;
- addition of a new (500 N) classification for the resistance to traffic load applied to small surface areas on a flushfloor service unit;

Documents
Document Sharing Hub

Full document details: IEC 61534-22 2014

- addition of a new classification for the non-automatic closing of the lid on flushfloor service units and appropriate tests;
- addition of tests for floor service units declared for use when a floor is wet-treated.

The text of this standard is based on the following documents:

| FDIS | Report on voting |
|---|---|
| 23A/702/FDIS | 23A/708/RVD |

Full information on the voting for the approval of this standard can be found in the report on voting indicated in the above table.

This publication has been drafted in accordance with the ISO/IEC Directives, Part 2.

This standard is to be used in conjunction with IEC 61534-1:2011, *Powertrack systems – Part 1: General requirements*.

This Part 22 supplements or modifies the corresponding clauses of IEC 61534-1. Where a particular clause or subclause of IEC 61534-1:2011 is not mentioned in this Part 22, that clause or subclause applies as far as is reasonable. Where this Part 22 states "*addition*" or "*replacement*", the relevant text of IEC 61534-1:2011 is to be adapted accordingly.

Subclauses, tables and figures which are in addition to those in IEC 61534-1:2011 are numbered starting with 101.

A list of all parts of IEC 61534 series, published under the general title *Powertrack systems,* can be found on the IEC website.

The following differences exist in the countries indicated below:

Subclause 7.105.2: In the United Kingdom, this classification is not permitted.

The committee has decided that the contents of this publication will remain unchanged until the stability date indicated on the IEC web site under "http://webstore.iec.ch" in the data related to the specific publication. At this date, the publication will be

- reconfirmed,
- withdrawn,
- replaced by a revised edition, or
- amended.

Documents
Document Sharing Hub

Full document details: IEC 61534-22 2014

# POWERTRACK SYSTEMS –

## Part 22: Particular requirements for powertrack systems intended for onfloor or underfloor installation

## 1 Scope

Clause 1 of IEC 61534-1:2011 and IEC 61534-1:2011/AMD1:2014 is applicable except as follows:

**1.1** *Addition:*

This part of IEC 61534 specifies the particular requirements and tests for PT systems intended for mounting on, or under the floor level and floor service units which are mounted on the floor, under the floor or flush with the floor.

NOTE 1 Types and applications are shown in Figures AA.1a, AA.1b and AA.2

NOTE 2 Flushfloor PT systems, with the exception of flushfloor service units, are not covered by this standard.

## 2 Normative references

Clause 2 of IEC 61534-1:2011 is applicable except as follows:

*Addition:*

IEC 61534-1:2011, *Powertrack systems – Part 1: General requirements*
IEC 61534-1:2011/AMD1:2014

## 3 Terms and definitions

Clause 3 of IEC 61534-1:2011 and IEC 61534-1:2011/AMD1:2014 is applicable except as follows:

*Additional terms and definitions:*

**3.101**
**underfloor PT system**
PT system whose components, except flushfloor service units, are intended for installation beneath the finished floor and in normal use are not exposed to traffic loads

Examples are shown in Figures AA.1a and AA.1b

**3.102**
**onfloor PT system**
PT system whose components are mounted on the floor surface

An example is shown in Figure AA.2.

Documents
Document Sharing Hub

Full document details: IEC 61534-22 2014

**3.103**
**finished floor**
floor which carries the traffic load and which may be made of concrete, wood, or the like and which may or may not be completed with floor covering material such as carpet, tile, paint, parquet or similar means

**3.104**
**apparatus mounting device**
system component to accommodate electrical apparatus, for example switches, socket-outlets, circuit-breakers

**3.105**
**floor service unit**
system component used with a floor system and intended to accommodate one or more electrical apparatus such as switches, socket-outlets, circuit-breakers either directly or by use of mounting devices

**3.106**
**flushfloor service unit**
floor service unit that is flush with the finished floor when the unit is not in use'

**3.107**
**in-use floor service unit**
floor service unit which has cables and/or cords connected to external electrical appliances

**3.108**
**not in-use floor service unit**
floor service unit which has no cables and/or cords connected to external electrical appliances

## 4 General requirements

Clause 4 of IEC 61534-1:2011 is applicable.

## 5 General notes on tests

Clause 5 of IEC 61534-1:2011 is applicable.

## 6 Ratings

Clause 6 of IEC 61534-1:2011 is applicable.

## 7 Classification

Clause 7 of IEC 61534-1:2011 is applicable except as follows:

*Replacement:*

### 7.1 According to resistance to impact for installation and application

**7.1.1** PT system for 5 J impact

**7.1.2** PT system for 20 J impact

*Additional subclauses:*

Documents
Document Sharing Hub

Full document details: IEC 61534-22 2014

**7.101 According to floor treatment**

**7.101.1** Dry-treatment of floor

**7.101.2** Wet-treatment of floor for not in-use floor service unit

**7.101.3** Wet-treatment of floor for in-use floor service unit

**7.102 According to the intended location**

**7.102.1** Underfloor PT system

**7.102.2** Onfloor PT system

**7.103 According to resistance to traffic load applied to small surface area on a flushfloor service unit**

**7.103.1** 500 N

**7.103.2** 750 N

**7.103.3** 1 000 N

**7.103.4** 1 500 N

**7.103.5** 2 000 N

**7.103.6** 2 500 N

**7.103.7** 3 000 N

**7.104 Optional classification according to resistance to traffic load applied to large surface area on a flushfloor service unit**

**7.104.1** 2 000 N

**7.104.2** 3 000 N

**7.104.3** 5 000 N

**7.104.4** 10 000 N

**7.104.5** 15 000 N

**7.105 According to the type of lid used on flushfloor service units**

**7.105.1** Automatic closing of the lid

**7.105.2** Non-automatic closing of the lid

NOTE In the United Kingdom, classification 7.105.2 is not permitted.

## 8 Marking and documentation

Clause 8 of IEC 61534-1:2011 and IEC 61534-1:2011/AMD1:2014 is applicable.

Documents
Document Sharing Hub

Full document details: IEC 61534-22 2014

## 9 Construction

Clause 9 of IEC 61534-1:2011 is applicable except as follows:

*Additional subclauses:*

**9.101** Underfloor powertrack system components shall withstand external loads during transport and installation but are not subjected to traffic loads in normal use.

Compliance is checked by the tests specified in 14.101.2.

**9.102** Onfloor powertrack system components shall withstand external loads.

Compliance is checked by the tests specified in 14.101.3.

**9.103** Flushfloor service units shall withstand traffic loads in accordance with 7.103 and 7.104.

Compliance is checked by the tests specified in 14.101.4.

**9.104** Lids of flush floor service units shall be so designed that in normal use they cannot be detached without an intentional action and also resist movement or unintentional opening when subject to external load.

Compliance is checked by inspection and the test of 14.101.4 and 14.101.5 as appropriate.

Lids of flush floor service units declared according to 7.105.1 shall be so designed that in normal use they will close automatically.

Compliance is checked by inspection and manual test.

**9.105** Floor service units declared according to 7.101.2 and 7.101.3 shall avoid water coming into contact with insulated conductors and live parts during wet-treatment of floor by one or a combination of the following methods which may vary within the system:

– method 1: ensuring by design that water does not come into contact with insulated conductors and live parts when the water level is 10 mm above the upper level of the floor covering;
– method 2: providing an IP rating not less than IPX4;
– method 3: providing manufacturer's instructions which require that insulated conductors and live parts are positioned not less than 10 mm above the upper level of the floor covering.

For method 1, compliance is checked by measurement. For method 2, compliance is checked by the test of 21.2.3.101. For method 3, compliance is checked by inspection.

**9.106** Flushfloor service units shall be so constructed that when installed with the lid closed they shall not present a trip hazard. Any protrusion above the finished floor shall not be greater than 4 mm, or 8 mm in the case of a chamfered step with an angle not exceeding 45° with the horizontal surface. When the service unit is in use this requirement does not apply.

Compliance is checked by inspection.

Documents
Document Sharing Hub
Full document details: IEC 61534-22 2014

## 10 Clearances, creepage distances and solid insulation

Clause 10 of IEC 61534-1:2011 is applicable.

## 11 Protection against electric shock

Clause 11 of IEC 61534-1:2011 is applicable except as follows:

*Additional subclause:*

**11.1.101** The minimum IP rating for powertrack system components accessible to ordinary persons during normal use shall be IP 3XD. This requirement does not apply to accessories.

## 12 Terminals and terminations

Clause 12 of IEC 61534-1:2011 is applicable.

## 13 Screws, current-carrying parts and connections

Clause 13 of IEC 61534-1:2011 is applicable.

## 14 Mechanical strength

Clause 14 of IEC 61534-1:2011 is applicable except as follows:

### 14.2 Impact test

*Delete 14.2.*

*Additional subclauses:*

### 14.101 External mechanical load test

#### 14.101.1 General

Underfloor and onfloor PT systems and PT flushfloor service units, shall have sufficient mechanical strength against external mechanical loads likely to occur during normal use:

– underfloor PT system components by the test of 14.101.2;
– onfloor PT system components by the tests of 14.101.3;
– flushfloor service units by the test of 14.101.4 and 14.101.5 as appropriate.

Any part for temporary use only during the installation phase does not need to comply with these tests but may be included for the test to allow compliance of other parts.

#### 14.101.2 Load test for underfloor powertrack system components

##### 14.101.2.1 General

Powertrack (PT) systems including tap-off units shall have sufficient mechanical strength against external loads likely to occur during installation and use.

Documents
Document Sharing Hub

Full document details: IEC 61534-22 2014

#### 14.101.2.2 Powertrack

The test shall be performed on a sample consisting of two lengths of powertrack each with a minimum length of 0,5 m which are connected together with the necessary connectors and with a supply connector at each end of the sample.

The sample is positioned on a horizontal rigid support. A steel cube of (50 ± 0,5) mm with an edge radius of approximately 1 mm is placed centrally on the joint. In the case of multi-compartment powertrack whose partition walls provide support, the middle of the largest compartment is selected, see Figure 101.

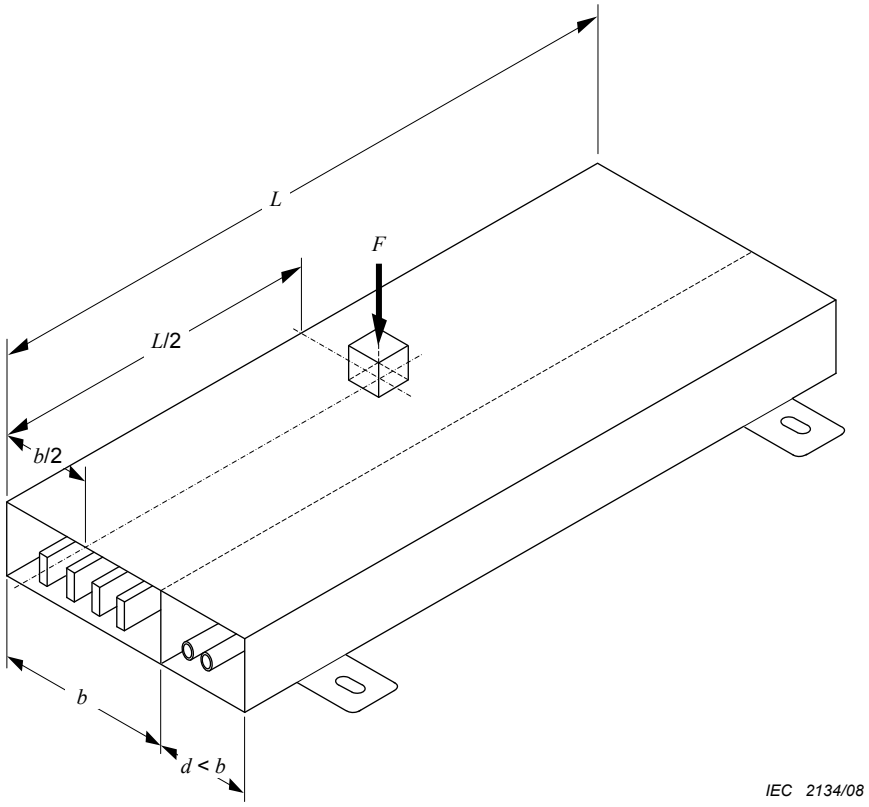


**Key**

*b* width of the largest compartment

*d* width of the smallest compartment

*L* length of sample

*F* applied vertical force

**Figure 101 – External load test**

A vertical force of (750 ± 10) N is gradually applied over (60 ± 1) s and maintained for a further (120 ± 5) s centrally to the cube.

During the test, there shall be no deformation that impairs electrical safety.

In case of doubt, the sample shall conform to Clause 10 and 11.1.1.1.

After the test, the sample shall show no signs of damage, nor any cracks visible to normal or corrected vision without additional magnification.

Documents
Document Sharing Hub
Full document details: IEC 61534-22 2014

After removal of the external load, the continuity of the protective circuit shall remain unaffected.

A current of (25 ± 1) A a.c. having a nominal frequency of 50 Hz or 60 Hz supplied by a source with a no-load voltage not exceeding 12 V shall be passed between the earthing terminals at each end of the sample. Measurement of the voltage drop shall be made within 120 s after the initiation of the current flow. The impedance per metre, calculated from the measurement of the voltage drop between the two supply connectors, shall not exceed the value declared by the manufacturer or 0,05 Ω/m whichever is the lower.

#### 14.101.2.3 Tap-off units

A tap-off unit shall be centrally installed on a length of powertrack which has a minimum length of 0,5 m.

The powertrack is positioned on a horizontal rigid support. A steel cube of (50 ± 0,5) mm with an edge radius of approximately 1 mm is placed centrally on the tap-off unit.

A vertical force of (750 ± 10) N is gradually applied over (60 ± 1) s and maintained for a further (120 ± 5) s centrally to the cube.

During the test, there shall be no deformation that impairs electrical safety.

In case of doubt, the sample shall conform to Clause 10 and 11.1.1.1.

After the test, the sample shall show no signs of damage, nor any cracks visible to normal or corrected vision without additional magnification.

After removal of the external load, the continuity of the protective circuit shall remain unaffected.

A current of (25 ± 1) A a.c. having a nominal frequency of 50 Hz or 60 Hz supplied by a source with a no-load voltage not exceeding 12 V shall be passed between the earthing terminal or contact of the tap-off unit and the nearest point on the protective earth busbar with the tap-off unit fully engaged as in normal use. Measurement of the voltage drop shall be made within 120 s after the initiation of the current flow. The impedance calculated from the measurement of the voltage drop between the two points stated shall not exceed the value declared by the manufacturer or 0,05 Ω/m whichever is the lower.

### 14.101.3 Load test for onfloor PT system components

#### 14.101.3.1 General

PT systems including tap-off units shall have sufficient mechanical strength against external loads likely to occur during installation and use.

#### 14.101.3.2 Powertrack

The test shall be performed on a sample consisting of two lengths of powertrack each with a minimum length of 0,5 m which are connected together with the necessary connectors and with a supply connector at each end of the sample.

The sample is positioned on a horizontal rigid support. A steel cube of (50 ± 0,5) mm with an edge radius of approximately 1 mm is placed centrally on the joint. In the case of multi-compartment powertrack whose partition walls provide support, the middle of the largest compartment is selected, see Figure 101.

Documents
Document Sharing Hub
Full document details: IEC 61534-22 2014

A vertical force of (1 000 ± 10) N is gradually applied over (60 ± 1) s and maintained for a further (120 ± 5) s centrally to the cube.

During the test, there shall be no deformation that impairs electrical safety.

In case of doubt, the sample shall conform to Clause 10 and 11.1.1.1.

After the test, the sample shall show no signs of damage, nor any cracks visible to normal or corrected vision without additional magnification.

After removal of the external load, the continuity of the protective circuit shall remain unaffected.

A current of (25 ± 1) A a.c. having a nominal frequency of 50 Hz or 60 Hz supplied by a source with a no-load voltage not exceeding 12 V shall be passed between the earthing terminals at each end of the sample. Measurement of the voltage drop shall be made within 120 s after the initiation of the current flow. The impedance per metre, calculated from the measurement of the voltage drop between the two supply connectors, shall not exceed the value declared by the manufacturer or 0,05 Ω/m whichever is the lower.

#### 14.101.3.3 Tap-off units

A tap-off unit shall be centrally installed on a length of powertrack which has a minimum length of 0,5 m.

The powertrack is positioned on a horizontal rigid support. A steel cube of (50 ± 0,5) mm with an edge radius of approximately 1 mm is placed centrally on the tap-off unit.

A vertical force of (1 000 ± 10) N is gradually applied over (60 ± 1) s and maintained for a further (120 ± 5) s centrally to the cube.

During the test, there shall be no deformation that impairs electrical safety.

In case of doubt, the sample shall conform to Clause 10 and 11.1.1.1

After the test, the sample shall show no signs of damage, nor any cracks visible to normal or corrected vision without additional magnification.

After removal of the external load, the continuity of the protective circuit shall remain unaffected.

A current of (25 ± 1) A a.c. having a nominal frequency of 50 Hz or 60 Hz supplied by a source with a no-load voltage not exceeding 12 V shall be passed between the earthing terminal or contact of the tap-off unit and the nearest point on the protective earth busbar with the tap-off unit fully engaged as in normal use. Measurement of the voltage drop shall be made within 120 s after the initiation of the current flow. The impedance calculated from the measurement of the voltage drop between the two points stated shall not exceed the value declared by the manufacturer or 0,05 Ω/m whichever is the lower.

### 14.101.4 Traffic load test for flushfloor service units as declared in 7.103

The test is carried out on an assembly prepared according to the manufacturer's instructions.

Additional provision may be included to simulate the influence of the floor material on the sides of the product. Other system components may be included, if necessary, to prevent movement.

Documents
Document Sharing Hub

Full document details: IEC 61534-22 2014