IEC 61557-7

Edition 3.0 2019-07
REDLINE VERSION

INTERNATIONAL STANDARD

colour inside

Electrical safety in low voltage distribution systems up to 1 000 V a.c. and 1 500 V d.c. – Equipment for testing, measuring or monitoring of protective measures –
Part 7: Phase sequence

IEC 61557-7:2019-07 RLV(en)

Documents
Document Sharing Hub

Full document details: IEC 61557-7 2019 RLV

THIS PUBLICATION IS COPYRIGHT PROTECTED
Copyright © 2019 IEC, Geneva, Switzerland

All rights reserved. Unless otherwise specified, no part of this publication may be reproduced or utilized in any form or by any means, electronic or mechanical, including photocopying and microfilm, without permission in writing from either IEC or IEC's member National Committee in the country of the requester. If you have any questions about IEC copyright or have an enquiry about obtaining additional rights to this publication, please contact the address below or your local IEC member National Committee for further information.

IEC Central Office
3, rue de Varembé
CH-1211 Geneva 20
Switzerland

Tel.: +41 22 919 02 11
info@iec.ch
www.iec.ch

About the IEC
The International Electrotechnical Commission (IEC) is the leading global organization that prepares and publishes International Standards for all electrical, electronic and related technologies.

About IEC publications
The technical content of IEC publications is kept under constant review by the IEC. Please make sure that you have the latest edition, a corrigendum or an amendment might have been published.

IEC publications search - webstore.iec.ch/advsearchform
The advanced search enables to find IEC publications by a variety of criteria (reference number, text, technical committee,…). It also gives information on projects, replaced and withdrawn publications.

IEC Just Published - webstore.iec.ch/justpublished
Stay up to date on all new IEC publications. Just Published details all new publications released. Available online and once a month by email.

IEC Customer Service Centre - webstore.iec.ch/csc
If you wish to give us your feedback on this publication or need further assistance, please contact the Customer Service Centre: sales@iec.ch.

Electropedia - www.electropedia.org
The world's leading online dictionary on electrotechnology, containing more than 22 000 terminological entries in English and French, with equivalent terms in 16 additional languages. Also known as the International Electrotechnical Vocabulary (IEV) online.

IEC Glossary - std.iec.ch/glossary
67 000 electrotechnical terminology entries in English and French extracted from the Terms and Definitions clause of IEC publications issued since 2002. Some entries have been collected from earlier publications of IEC TC 37, 77, 86 and CISPR.

Documents
Document Sharing Hub

Full document details: IEC 61557-7 2019 RLV

IEC 61557-7

Edition 3.0 2019-07
REDLINE VERSION

INTERNATIONAL STANDARD

colour inside

Electrical safety in low voltage distribution systems up to 1 000 V a.c. and 1 500 V d.c. – Equipment for testing, measuring or monitoring of protective measures –
Part 7: Phase sequence

INTERNATIONAL
ELECTROTECHNICAL
COMMISSION

ICS 17.220.20; 29.080.01; 29.240.01

ISBN 978-2-8322-7161-2

Warning! Make sure that you obtained this publication from an authorized distributor.

® Registered trademark of the International Electrotechnical Commission

Documents
Document Sharing Hub

Full document details: IEC 61557-7 2019 RLV

CONTENTS

FOREWORD 3
1 Scope 5
2 Normative references 5
3 Terms and definitions 6
4 Requirements 6
4.1 General 7
4.2 Indication 7
4.3 Measuring equipment 8
4.3.1 General 8
4.3.2 Portable phase sequence indicator 8
4.3.3 Test leads for direct contact with live parts and accessories 8
5 Marking and operating instructions 9
5.1 Marking 9
5.2 Operating instructions 9
6 Tests 9
6.1 General 9
6.1.1 Tests – General 9
6.1.2 Visual display 9
6.1.3 Audible indication (if applicable) 10
6.2 Leakage current 10
6.3 Test of mechanical requirements (type tests) 10
6.3.1 Mechanical shock test 10
6.3.2 Test of leads for direct contact with live parts 10
6.4 Overvoltage 10
6.5 Test of markings 11
Annex A (normative) Illustrations for mechanical tests 12
Annex B (informative) Phase sequence test 14
B.1 Phase sequence test – Tripolar connection 14
B.2 Phase sequence test – Sequential bipolar connection 14
Bibliography 16

Figure A.1 – Mechanical shock test 12
Figure A.2 – Drop test 13
Figure B.1 – Tripolar connection 14
Figure B.2 – Sequential bipolar connection 15

Documents
Document Sharing Hub

Full document details: IEC 61557-7 2019 RLV

INTERNATIONAL ELECTROTECHNICAL COMMISSION

ELECTRICAL SAFETY IN LOW VOLTAGE DISTRIBUTION SYSTEMS UP TO 1 000 V AC AND 1 500 V DC – EQUIPMENT FOR TESTING, MEASURING OR MONITORING OF PROTECTIVE MEASURES –

Part 7: Phase sequence

FOREWORD

1) The International Electrotechnical Commission (IEC) is a worldwide organization for standardization comprising all national electrotechnical committees (IEC National Committees). The object of IEC is to promote international co-operation on all questions concerning standardization in the electrical and electronic fields. To this end and in addition to other activities, IEC publishes International Standards, Technical Specifications, Technical Reports, Publicly Available Specifications (PAS) and Guides (hereafter referred to as "IEC Publication(s)"). Their preparation is entrusted to technical committees; any IEC National Committee interested in the subject dealt with may participate in this preparatory work. International, governmental and non-governmental organizations liaising with the IEC also participate in this preparation. IEC collaborates closely with the International Organization for Standardization (ISO) in accordance with conditions determined by agreement between the two organizations.
2) The formal decisions or agreements of IEC on technical matters express, as nearly as possible, an international consensus of opinion on the relevant subjects since each technical committee has representation from all interested IEC National Committees.
3) IEC Publications have the form of recommendations for international use and are accepted by IEC National Committees in that sense. While all reasonable efforts are made to ensure that the technical content of IEC Publications is accurate, IEC cannot be held responsible for the way in which they are used or for any misinterpretation by any end user.
4) In order to promote international uniformity, IEC National Committees undertake to apply IEC Publications transparently to the maximum extent possible in their national and regional publications. Any divergence between any IEC Publication and the corresponding national or regional publication shall be clearly indicated in the latter.
5) IEC itself does not provide any attestation of conformity. Independent certification bodies provide conformity assessment services and, in some areas, access to IEC marks of conformity. IEC is not responsible for any services carried out by independent certification bodies.
6) All users should ensure that they have the latest edition of this publication.
7) No liability shall attach to IEC or its directors, employees, servants or agents including individual experts and members of its technical committees and IEC National Committees for any personal injury, property damage or other damage of any nature whatsoever, whether direct or indirect, or for costs (including legal fees) and expenses arising out of the publication, use of, or reliance upon, this IEC Publication or any other IEC Publications.
8) Attention is drawn to the Normative references cited in this publication. Use of the referenced publications is indispensable for the correct application of this publication.
9) Attention is drawn to the possibility that some of the elements of this IEC Publication may be the subject of patent rights. IEC shall not be held responsible for identifying any or all such patent rights.

This redline version of the official IEC Standard allows the user to identify the changes made to the previous edition. A vertical bar appears in the margin wherever a change has been made. Additions are in green text, deletions are in strikethrough red text.

Documents
Document Sharing Hub

Full document details: IEC 61557-7 2019 RLV

International Standard IEC 61557-7 has been prepared by IEC technical committee 85: Measuring equipment for electrical and electromagnetic quantities.

This third edition cancels and replaces the second edition published in 2007. This edition constitutes a technical revision.

This edition includes the following changes with respect to the previous edition:

a) alignment of the structure with that of the whole IEC 61557 series;
b) updated requirements in 4.3 in accordance with new editions of IEC 61010-1 and IEC 61010-031;
c) the information on markings was extended;
d) the information on the operating instructions was extended;
e) complement to the information on the testing of leads;
f) test leads for insulated conductors were introduced;
g) Annex B was added with information on phase sequence tests and indications.

The text of this International Standard is based on the following documents:

FDIS	Report on voting
85/683/FDIS	85/698/RVD

Full information on the voting for the approval of this International Standard can be found in the report on voting indicated in the above table.

This document has been drafted in accordance with the ISO/IEC Directives, Part 2.

This International Standard is to be used in conjunction with IEC 61557-1:2019.

A list of all parts of the IEC 61557 series, published under the general title *Electrical safety in low voltage distribution systems up to 1 000 V AC and 1 500 V DC – Equipment for testing, measuring or monitoring of protective measures*, can be found on the IEC website

The committee has decided that the contents of this document will remain unchanged until the stability date indicated on the IEC website under "http://webstore.iec.ch" in the data related to the specific document. At this date, the document will be

- reconfirmed,
- withdrawn,
- replaced by a revised edition, or
- amended.

IMPORTANT – The “colour inside” logo on the cover page of this publication indicates that it contains colours which are considered to be useful for the correct understanding of its contents. Users should therefore print this document using a colour printer.

Documents
Document Sharing Hub

Full document details: IEC 61557-7 2019 RLV

ELECTRICAL SAFETY IN LOW VOLTAGE DISTRIBUTION SYSTEMS UP TO 1 000 V AC AND 1 500 V DC – EQUIPMENT FOR TESTING, MEASURING OR MONITORING OF PROTECTIVE MEASURES –

Part 7: Phase sequence

1 Scope

This part of IEC 61557 specifies the requirements ~~for~~ applicable to measuring equipment ~~applied to~~ for testing the phase sequence in three-phase distribution systems. Indication of the phase sequence ~~may~~ can be mechanical, visual and/or audible.

~~This part of IEC 61557 does not apply to ancillary measuring equipment for other quantities, for example voltage testers comprising an additional phase sequence indicator.~~ This document does not apply to additional measurements for other quantities. It does not apply to monitoring relays.

NOTE ~~Phase lamps are not considered to be voltage testers.~~ Common worldwide three-phase distribution systems are depicted in IEC 61010-1.

2 Normative references

The following documents are referred to in the text in such a way that some or all of their content constitutes requirements of this document. For dated references, only the edition cited applies. For undated references, the latest edition of the referenced document (including any amendments) applies.

~~IEC 60417, *Graphical symbols for use on equipment*~~

IEC 61010-1:2010, *Safety requirements for electrical equipment for measurement, control, and laboratory use – Part 1: General requirements*
IEC 61010-1:2010/AMD1:2016[1]

IEC 61010-2-030:2017, *Safety requirements for electrical equipment for measurement, control, and laboratory use – Part 2-030: Particular requirements for equipment having testing or measuring circuits*

IEC 61010-031, *Safety requirements for electrical equipment for measurement, control and laboratory use – Part 031: Safety requirements for hand-held and hand-manipulated assemblies for electrical test and measurement*

~~IEC 61010-3-031, *Safety requirements for electrical equipment for measurement, control, and laboratory use – Part 3-031: Conformity verification report for IEC 61010-031:2002 – Safety requirements for hand-held probe assemblies for electrical test and measurement*~~

IEC 61557-1:2019 *Electrical safety in low voltage distribution systems up to 1 000 V AC and 1 500 V DC – Equipment for testing, measuring or monitoring of protective measures – Part 1: General requirements*

[1] A consolidated version of this publication exists, comprising IEC 61010-1:2010 and IEC 61010-1:2010/AMD1:2016.

AVA Documents Document Sharing Hub

Full document details: IEC 61557-7 2019 RLV

3 Terms and definitions

For the purposes of this document, the terms and definitions given in IEC 61557-1 and the following apply.

ISO and IEC maintain terminological databases for use in standardization at the following addresses:

- IEC Electropedia: available at http://www.electropedia.org/
- ISO Online browsing platform: available at http://www.iso.org/obp

3.1
phase sequence indicator
instrument intended to indicate, in a polyphase system, the sequence in which the instantaneous voltages of the phase conductors reach their maximum values

[SOURCE: IEC 60050-313:2001, 313-01-21]

3.2
phase sequence indication
information displayed by a phase sequence indicator

3.3
phase sequence test
test taken to determine that the phase sequence of a polyphase winding is correct

[SOURCE: IEC 60050-411:1996, 411-53-45]

4 Requirements

~~The following requirements as well as those given in IEC 61557-1 shall apply.~~

~~**4.1** Indication shall be unambiguous between 85 % and 110 % of the nominal system voltage or within the range of the nominal voltage and between 95 % and 105 % of the nominal system frequency.~~

~~**4.2** Indication shall also be unambiguously detectable in the presence of visual or audible interference.~~

~~**4.3** The measuring equipment shall be suitable for continuous operation.~~

~~**4.4** Portable measuring equipment shall be housed in an enclosure of insulating material and comply with double insulation or reinforced insulation (protection class II).~~

~~**4.5** Portable measuring equipment shall be designed in such a manner that when either one or two measuring leads are connected to earth and the remaining measuring leads are connected to their corresponding phase conductors, the resulting total current to earth should not exceed 3,5 mA r.m.s. The phase conductors shall be at 110 % of the maximum rated voltage for which the equipment is designed.~~

~~**4.6** The measuring equipment shall not be damaged nor shall the user be exposed to danger when the measuring equipment is connected to 120 % of the rated system voltage or to 120 % of its rated maximum voltage range.~~

Documents
Document Sharing Hub

Full document details: IEC 61557-7 2019 RLV

~~**4.7** Portable measuring equipment shall be provided with permanently attached leads or with a plug device with live parts not accessible, whether plugged or unplugged (according to IEC 61010-3-031).~~

~~The following applies to leads~~

- ~~they shall have an outer diameter of at least 3,5 mm;~~
- ~~the copper cross-section shall be at least ≥ 0,75 mm²;~~
- ~~they shall be made from individual wires with a diameter ≤ 0,07 mm;~~
- ~~they shall be provided with double or reinforced insulation.~~

~~**4.8** Portable measuring equipment, together with their leads, shall comply with the mechanical requirements and shall be tested in accordance with 6.3. After these tests:~~

- ~~the enclosure of the measuring equipment shall be free from damage;~~
- ~~permanently attached leads shall not have become detached from the measuring equipment;~~
- ~~live parts of the leads connected by means of plugs shall remain inaccessible when they have become unplugged from the measuring equipment;~~
- ~~no parts inside the measuring equipment shall have become loose.~~

~~**4.9** Requirements given in 4.8 need not apply when the phase sequence indicator forms part of multi-purpose measuring equipment, provided that the following conditions are met:~~

- ~~live parts of the leads remain inaccessible even when they have become unplugged from the measuring equipment;~~
- ~~the measuring equipment shall be suitable for being carried, for example over the shoulder, when measurements are carried out.~~

4.1 General

In addition to the requirements of IEC 61557-1:2019, Clause 4, the requirements of Clause 4 of this document shall apply.

4.2 Indication

All indications shall be unambiguously displayed on the phase sequence indicator when the input to the phase indicator is between 85 % and 110 % of the nominal system voltage and between 95 % and 105 % of the nominal system frequency.

Indications shall also be unambiguously detectable in the presence of visual or audible interference.

The phase sequence indicator shall display a valid phase sequence indication, positive or negative, if the values of the voltage to earth of the three phases are within the voltage range specified above and the phase delay between two consecutive phases is 120°.

The phase sequence indicator shall not display a valid phase sequence indication, positive or negative, if the three-phase distribution system is heavily unbalanced.

NOTE An unbalanced system could be due to unbalanced loads on the three phases or due to cabling errors.

In particular the measuring equipment shall not display a valid phase sequence indication in the following cases:

1) one or more of the phase conductors are open-circuit;

AVA Documents
Document Sharing Hub

Full document details: IEC 61557-7 2019 RLV

2) one or more of the phase conductors are connected to neutral or protective earth;

3) two conductors are connected to the same phase.

The specific indications displayed in the above error cases shall be mentioned in the operating instructions of the phase sequence indicator.

The limits of unbalance in amplitude and in phase delay that the phase sequence indicator can handle reliably shall also be mentioned in the operating instructions.

4.3 Measuring equipment

4.3.1 General

The measuring equipment for the phase sequence test is intended for temporary operation, but shall withstand continuous operation.

Equipment intended to be used on the distribution system shall be rated at least for measurement category III according to IEC 61010-2-030.

Equipment intended to be used on socket outlets only can be rated for measurement category II according to IEC 61010-2-030.

The measuring equipment shall not be damaged nor shall the user be exposed to danger when the measuring equipment is connected to 120 % of the rated system voltage or to 120 % of the maximum voltage of its rated voltage range.

The phase sequence test (see Annex B) can be realised with test probes for direct contact with live parts, conductors or terminals, or with test clamps for inductive detection on insulated conductors.

4.3.2 Portable phase sequence indicator

Portable phase sequence indicators shall be housed in an enclosure of insulating material and comply with the requirements for double insulation or reinforced insulation (protection class II).

Portable phase sequence indicators shall be designed in such a manner that when either one or two measuring leads are connected to earth and the remaining measuring leads are connected to their corresponding phase conductors, the resulting total current to earth should not exceed 3,5 mA RMS. The phase conductors shall be at 110 % of the maximum rated voltage for which the equipment is designed.

4.3.3 Test leads for direct contact with live parts and accessories

Phase sequence indicators designed for direct contact to live parts shall be provided with permanently connected test leads or with terminals for removable test leads complying with IEC 61010-031.

The following applies to leads.

Test probes, test leads, clips and other accessories used with phase sequence indicators shall be in accordance with the requirements of IEC 61010-031.

A test lead cable that has a wear indicator shall, at the minimum, provide double insulation or reinforced insulation when new and, at the minimum, basic insulation when the wear indicator is reached (see IEC 61010-031).

Documents
Document Sharing Hub

Full document details: IEC 61557-7 2019 RLV

Portable measuring equipment, together with its test leads, shall comply with the requirements for mechanical strength according to IEC 61010-1 and in addition shall be tested in accordance with 6.4.

These requirements do not apply when the phase sequence indicator forms part of a multi-purpose instrument with provisions for carrying.

5 Marking and operating instructions

5.1 Marking

In addition to ~~the marking in accordance with~~ IEC 61557-1:2019, 5.1 and 5.2, the following information shall be provided on the measuring equipment:

~~**5.1.1** Symbol for the protection class in accordance with symbol IEC 60417-5172 (2003-02).~~

~~**5.1.2** Phase sequence.~~

~~**5.1.3** Designation of the leads L1, L2 and L3 on the equipment and on the leads.~~

– symbol for double insulation in accordance with IEC 61010-1:2010, Table 1, symbol 11;
– designation of leads L1, L2 and L3 on the equipment and on the leads;
– the measurement category shall be printed on the equipment close to the test lead connection.

5.2 Operating instructions

~~The operating instructions need not include any statements other than the statements given in IEC 61557-1, except for the equipment mentioned in 4.9.~~

IEC 61557-1:2019, 5.3 applies.

6 Tests

6.1 General

6.1.1 Tests – General

~~In addition to IEC 61557-1, with the exception of the tests given in 6.1 to 6.3 of that standard, the following tests shall be executed.~~

~~Test of the detectability of the indication in accordance with 4.1 and 4.2.~~

In addition to the tests of IEC 61557-1:2019, Clause 6, the following tests shall be performed.

6.1.2 Visual display

Tests of the visual display are ~~executed~~ performed under the following conditions ~~*(type tests)*~~.

The display shall be unambiguously discernible by a person with 6/6 vision from a distance of 500 mm at ambient lighting levels from 30 lx to 1 000 lx. During the measurement, the measuring equipment shall be placed on a matt grey surface (type test).

Documents
Document Sharing Hub
Full document details: IEC 61557-7 2019 RLV

A visual comparison under reference conditions with equipment that has successfully passed the type test is adequate for a routine test with respect to the visual display. The display on the item under test shall produce a similar or better readability (routine tests).

6.1.3 Audible indication (if applicable)

The test for the audible indication is ~~executed~~ performed at a sound level of L_{AF} = 75 dB~~(A)~~ (white noise). The indication shall generate a sound between 1 kHz and 4 kHz and be unambiguously discernible by a person with a hearing loss of less than 15 dB HL under these conditions (routine test).

6.2 Leakage current

~~Proof of compliance with the requirements under 4.5 shall be provided as follows:~~

The requirements under 4.3.2 shall be tested as follows.

The phase sequence indicator shall be connected in series with a current measuring instrument ~~on~~ that has one lead connected with earth, and with the other interconnected ~~other~~ leads connected with a phase conductor at a voltage of 110 % of its rated voltage or a voltage at the upper limit of its rated voltage range. The magnitude of the current shall not exceed the value specified under ~~4.5~~ 4.3.2.

This test shall be executed on each conductor (routine test).

6.3 Test of mechanical requirements (type tests)

6.3.1 Mechanical shock test

For the purpose of a mechanical shock test, the item under test shall be suspended as shown in Annex A, Figure A.1, using a pendulum length of 2 m. The item under test shall be dropped in a pendulum movement with a deflection of 1 m in height to hit a hard wooden plate 50 mm thick. The test shall be carried out so that each of the sides of the enclosure parallel to the suspension hits the wood once.

6.3.2 Test of leads for direct contact with live parts

The strain relief of permanently attached leads shall be tested by a drop test in accordance with Annex A, Figure A.2, in the following manner:

– the item under test shall be suspended so that it is caught with the extended lead after a free drop of 2 m;
– the item under test shall be dropped three times from the suspension point for each of the leads;
– the enclosure of the measuring equipment shall be free from damage;
– permanently attached leads shall not have become detached from the measuring equipment;
– live parts of the leads connected by means of plugs shall remain inaccessible when they have become unplugged from the measuring equipment;
– no parts inside the measuring equipment shall have become loose.

6.4 Overvoltage

The applicable requirement of 4.3.1 shall be tested as follows:

~~Compliance with the requirements given in 4.6 shall be checked by visual inspection or by measurement *(type test)*.~~

AVA Documents
Document Sharing Hub

Full document details: IEC 61557-7 2019 RLV

Compliance with the requirements given in 4.3.1 shall be tested by connecting, for a duration of at least 10 min, the item under test to a three-phase system at 120 % of the rated system voltage or, in the case of multi-range measuring equipment, at 120 % of all rated voltages (type test).

The surface temperature of EUT shall be measured and checked according to IEC 61010-1.

Compliance with the requirements given in 4.3 shall be tested by operating the item under test for a duration of at least 1 h at the rated voltage or, in the case of multi-range measuring equipment, at all rated voltage values (type test).

6.5 Test of markings

The markings shall be checked in respect of legibility by a visual inspection (type test).

~~**6.8** Compliance with the requirements given in 4.9 shall be tested by visual inspection of the sling and with probe assemblies plugged and unplugged *(type test)*.~~

~~**6.9** The compliance with the tests in this clause shall be recorded.~~

Documents
Document Sharing Hub

Full document details: IEC 61557-7 2019 RLV

Annex A
(normative)

Illustrations for mechanical tests

Mechanical shock tests shall be performed according to Figure A.1.

Dimensions in metres

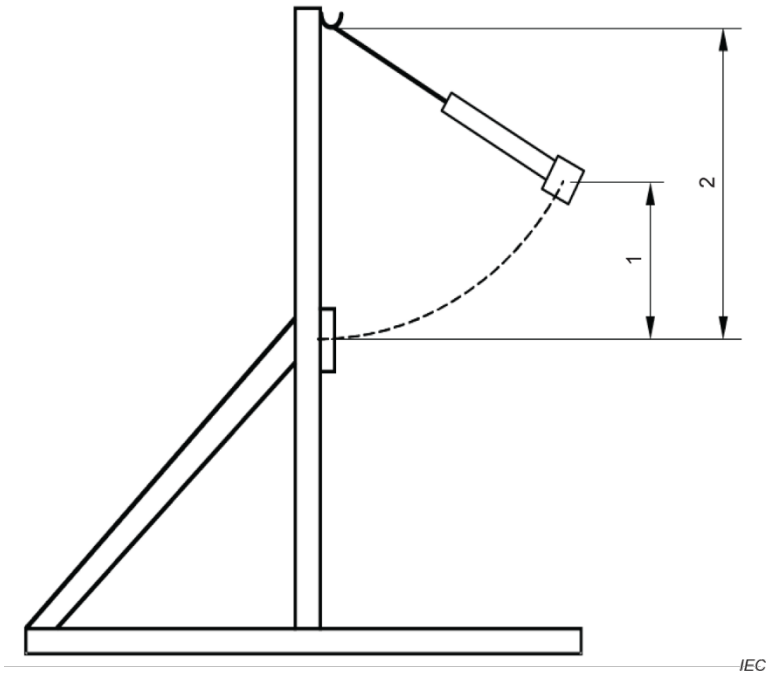

Figure A.1 – Mechanical shock test

Documents
Document Sharing Hub
Full document details: IEC 61557-7 2019 RLV

Drop tests shall be performed according to Figure A.2.

Dimensions in metres

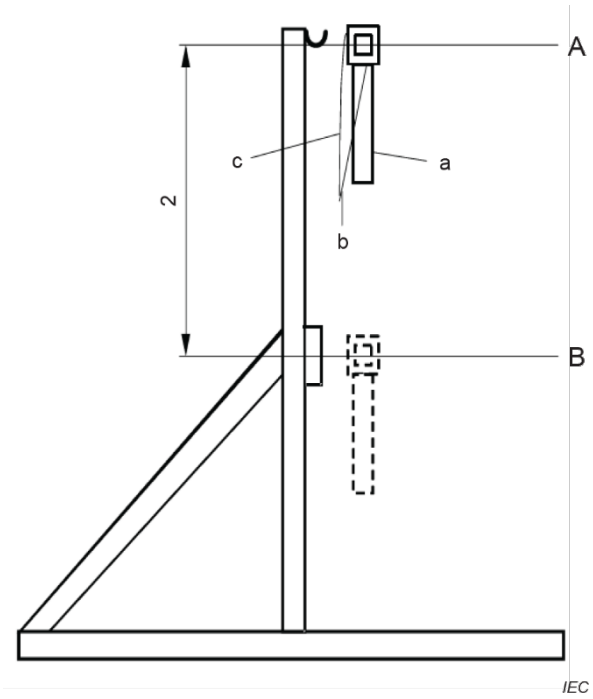

Key

a original lead

b joint

c extension to 2 m

A initial position where the equipment is held

B end position after the release of the equipment

Figure A.2 – Drop test

Documents
Document Sharing Hub
Full document details: IEC 61557-7 2019 RLV