IEC 61558-2-9

Edition 3.0 2024-06
EXTENDED VERSION

INTERNATIONAL STANDARD

colour inside

This extended version of IEC 61558-2-9:2024 includes the content of the references made to IEC 61558-1:2017

GROUP ENERGY EFFICIENCY PUBLICATION

Safety of transformers, reactors, power supply units and combinations thereof – Part 2-9: Particular requirements and tests for transformers and power supply units for class III handlamps

IEC 61558-2-9:2024-06 EXV(en)

Documents
Document Sharing Hub

Full document details: IEC 61558-2-9 2024 EXV

THIS PUBLICATION IS COPYRIGHT PROTECTED
Copyright © 2024 IEC, Geneva, Switzerland

All rights reserved. Unless otherwise specified, no part of this publication may be reproduced or utilized in any form or by any means, electronic or mechanical, including photocopying and microfilm, without permission in writing from either IEC or IEC's member National Committee in the country of the requester. If you have any questions about IEC copyright or have an enquiry about obtaining additional rights to this publication, please contact the address below or your local IEC member National Committee for further information.

IEC Secretariat
3, rue de Varembé
CH-1211 Geneva 20
Switzerland

Tel.: +41 22 919 02 11
info@iec.ch
www.iec.ch

About the IEC
The International Electrotechnical Commission (IEC) is the leading global organization that prepares and publishes International Standards for all electrical, electronic and related technologies.

About IEC publications
The technical content of IEC publications is kept under constant review by the IEC. Please make sure that you have the latest edition, a corrigendum or an amendment might have been published.

IEC publications search - webstore.iec.ch/advsearchform
The advanced search enables to find IEC publications by a variety of criteria (reference number, text, technical committee, …). It also gives information on projects, replaced and withdrawn publications.

IEC Just Published - webstore.iec.ch/justpublished
Stay up to date on all new IEC publications. Just Published details all new publications released. Available online and once a month by email.

IEC Customer Service Centre - webstore.iec.ch/csc
If you wish to give us your feedback on this publication or need further assistance, please contact the Customer Service Centre: sales@iec.ch.

IEC Products & Services Portal - products.iec.ch
Discover our powerful search engine and read freely all the publications previews, graphical symbols and the glossary. With a subscription you will always have access to up to date content tailored to your needs.

Electropedia - www.electropedia.org
The world's leading online dictionary on electrotechnology, containing more than 22 500 terminological entries in English and French, with equivalent terms in 25 additional languages. Also known as the International Electrotechnical Vocabulary (IEV) online.

Documents
Document Sharing Hub

Full document details: IEC 61558-2-9 2024 EXV

IEC 61558-2-9

Edition 3.0 2024-06
EXTENDED VERSION

INTERNATIONAL STANDARD

colour inside

This extended version of IEC 61558-2-9:2024 includes the content of the references made to IEC 61558-1:2017

GROUP ENERGY EFFICIENCY PUBLICATION

Safety of transformers, reactors, power supply units and combinations thereof – Part 2-9: Particular requirements and tests for transformers and power supply units for class III handlamps

INTERNATIONAL
ELECTROTECHNICAL
COMMISSION

ICS 29.180

ISBN 978-2-8322-9129-0

Warning! Make sure that you obtained this publication from an authorized distributor.

® Registered trademark of the International Electrotechnical Commission

Documents
Document Sharing Hub

Full document details: IEC 61558-2-9 2024 EXV

CONTENTS

FOREWORD ... 9
INTRODUCTION to IEC 61558-1:2017 ... 12
INTRODUCTION to IEC 61558-2-9:2024 ... 14
1 Scope ... 15
2 Normative references ... 16
3 Terms and definitions ... 19
3.1 Transformers ... 19
3.2 General terms ... 23
3.3 Operations and protections ... 24
3.4 Circuits and windings ... 26
3.5 Ratings ... 27
3.6 No-load values ... 29
3.7 Insulation ... 29
3.8 Touch current and protective earthing conductor current ... 33
4 General requirements ... 33
5 General notes on tests ... 34
6 Ratings ... 36
7 Classification ... 36
8 Marking and other information ... 37
9 Protection against electric shock ... 44
9.1 General ... 44
9.2 Protection against contact with hazardous-live-parts ... 44
9.2.1 Determination of hazardous-live-parts ... 44
9.2.2 Accessibility to hazardous-live-parts ... 45
9.2.3 Accessibility to non hazardous-live-part ... 48
9.3 Protection against hazardous electrical discharge ... 48
10 Change of input voltage setting ... 48
11 Output voltage and output current under load ... 49
12 No-load output voltage ... 49
13 Short-circuit voltage ... 50
14 Heating ... 51
14.1 General requirements ... 51
14.1.1 Temperature-rise test ... 51
14.1.2 Alternative temperature-rise test ... 53
14.1.3 Determination of steady-state conditions ... 55
14.2 Application of 14.1 or 14.3 according to the insulation system ... 57
14.3 Accelerated ageing test for undeclared class of insulation system ... 57
14.3.1 General ... 57
14.3.2 Heat run ... 58
14.3.3 Vibration ... 58
14.3.4 Moisture treatment ... 58
14.3.5 Measurements ... 58
15 Short circuit and overload protection ... 59
15.1 General requirements ... 59
15.1.1 Short circuit and overload test method ... 59

AVA Documents
Document Sharing Hub
Full document details: IEC 61558-2-9 2024 EXV

15.1.2 Alternative short circuit and overload test method 61
15.2 Inherently short-circuit proof transformers 61
15.3 Non-inherently short-circuit proof transformers 61
15.4 Non-short-circuit proof transformers 62
15.5 Fail-safe transformers 62
16 Mechanical strength 63
16.1 General 63
16.2 Stationary transformers 63
16.3 Portable transformers (except portable transformers with integral pins for introduction in socket-outlet in the fixed wiring) 64
16.4 Portable transformers provided with integral pins for introduction in socket-outlets of the fixed wiring 64
16.4.1 General requirements 64
16.4.2 Portable transformers provided with integral pins according to EN 50075 (IEC plug type C) for introduction in socket-outlets of the fixed wiring 65
16.5 Additional requirements for transformers to be used in vehicles and railway applications 66
16.5.1 Transformers to be used in vehicles and railway applications 66
16.5.2 Test requirements for the transportation of transformers 67
17 Protection against harmful ingress of dust, solid objects and moisture 68
17.1 Degrees of protection provided by enclosures (IP code) 68
17.1.1 General requirements 68
17.1.2 Tests on transformers with enclosure 69
17.2 Humidity treatment 71
18 Insulation resistance, dielectric strength and leakage current 72
18.1 General 72
18.2 Insulation resistance 72
18.3 Dielectric strength test 73
18.4 Insulation between and within windings 75
18.5 Touch current and protective earthing conductor current 75
18.5.1 General 75
18.5.2 Touch current 76
18.5.3 Protective earthing conductor current 77
19 Construction 77
19.1 General construction 77
19.2 Flammability of materials 79
19.3 Short-circuit characteristics of portable transformers 79
19.4 Class II transformer contact prevention of accessible conductive parts 79
19.5 Class II transformer insulation reassembling after service 80
19.6 Loosening of wires, screws or similar parts 80
19.7 Resistor or capacitor connection with accessible conductive parts 80
19.8 Bridging of separated conductive parts by resistors or capacitors 81
19.9 Insulating material separating input and output windings 81
19.10 Accidental contact protection against hazardous-live-parts provided by isolating coating 82
19.11 Insulating material of handles, operating levers, knobs and similar parts 83
19.12 Winding construction 83
19.13 Fixing of handles, operating levers and similar parts 87
19.14 Fixing of covers providing protection against electric shock 87

AVA Documents
Document Sharing Hub
Full document details: IEC 61558-2-9 2024 EXV

19.15 Strain on fixed socket-outlets caused by pin-transformers connection 87
19.16 Portable transformers for use in irregular or harsh conditions 87
19.17 Drain hole of transformers protected against ingress of water 87
19.18 Plug connected transformers protected against ingress of water 87
19.19 Flexible cable or flexible cord connection for class I portable transformers 88
19.20 SELV- and PELV-circuit separation of live parts 88
19.21 Protection against contact for FELV-circuit 88
19.22 Protective earthing regarding class II transformers 89
19.23 Protective earthing regarding class III transformers 89
20 Components 89
21 Internal wiring 94
22 Supply connection and other external flexible cables or cords 95
23 Terminals for external conductors 102
24 Provisions for protective earthing 103
25 Screws and connections 105
26 Creepage distances, clearances and distances through insulation 107
26.1 General 107
26.2 Creepage distances and clearances 108
26.2.1 General 108
26.2.2 Windings covered with adhesive tape 108
26.2.3 Uncemented insulationing parts 108
26.2.4 Cemented insulating parts 108
26.2.5 Enclosed parts (e.g. by impregnation or potting) 109
26.3 Distance through insulation 110
27 Resistance to heat, fire and tracking 121
27.1 General 121
27.2 Resistance to heat 121
27.2.1 General 121
27.2.2 External accessible parts 121
27.2.3 Internal parts 122
27.3 Resistance to abnormal heat under fault conditions 122
27.4 Resistance to fire 123
27.4.1 General 123
27.4.2 External accessible parts 124
27.4.3 Internal parts 124
27.5 Resistance to tracking 125
28 Resistance to rusting 125
Annex A (normative) Measurement of creepage distances and clearances 126
Annex B (normative) Testing a series of transformers 130
B.1 General 130
B.2 Requirements 130
B.3 Constructional inspection 131
Annex C (void) 132
Annex D (void) 133
Annex E (normative) Glow-wire test 134
E.1 General 134
E.2 Severity 134

AVA Documents
Document Sharing Hub
Full document details: IEC 61558-2-9 2024 EXV

E.3 Conditioning ... 134
E.4 Test procedure ... 134
Annex F (normative) Requirements for manually operated switches which are parts of transformers assembly ... 135
F.1 General ... 135
F.2 Switches tested as a separate component ... 135
F.3 Switches tested as part of the transformer ... 135
Annex G (normative) Tracking test ... 138
G.1 General ... 138
G.2 Test specimen ... 138
G.3 Test apparatus ... 138
G.4 Procedure ... 138
Annex H (normative) Electronic circuits ... 139
H.1 General ... 139
H.2 General notes on tests (addition to Clause 5) ... 139
H.3 Short circuit and overload protection (addition to Clause 15) ... 139
H.4 Creepage distances, clearances and distances through insulation (addition to Clause 26) ... 141
Annex I (informative) Dimensions for rectangular cross-section connectors of transformers, basic dimensions and coordination ... 143
Annex J (normative) Measuring network for touch-currents ... 145
Annex K (normative) Insulated winding wires ... 146
K.1 General ... 146
K.2 Type tests ... 146
K.2.1 General ... 146
K.2.2 Dielectric strength test ... 146
K.2.3 Flexibility and adherence ... 146
K.2.4 Heat shock ... 147
K.2.5 Retention of dielectric strength after bending ... 147
K.3 Testing during manufacturing ... 148
K.3.1 General ... 148
K.3.2 Routine test ... 148
K.3.3 Sampling test ... 148
Annex L (normative) Routine tests (production tests) ... 149
L.1 General ... 149
L.2 Protective earthing continuity test ... 149
L.3 Checking of no-load output voltage ... 149
L.4 Dielectric strength test ... 149
L.5 Checking of protective devices mounting ... 150
L.6 Visual inspection ... 150
L.7 Repetition test after routine dielectric strength test ... 150
Annex M (informative) Examples to be used as a guide for 19.1 ... 151
M.1 General ... 151
M.2 Coil-former ... 151
M.2.1 Concentric type ... 151
M.2.2 Side-by-side type ... 152
M.3 Windings ... 152
M.3.1 Without screen ... 152

AVA Documents
Document Sharing Hub
Full document details: IEC 61558-2-9 2024 EXV

M.3.2 With screen ... 153
Annex N (informative) Examples for checking points of dielectric strength test voltages ... 154
Annex O (void) ... 156
Annex P (informative) Examples for measurement points of creepage distances and clearances ... 157
Annex Q (informative) Explanation of IP numbers for degrees of protection ... 160
Q.1 General ... 160
Q.2 Degrees of protection against access to hazardous parts and against solid foreign objects ... 160
Q.3 Degrees of protection against ingress of water ... 162
Annex R (normative) Explanations of the application of 6.1.2.2.1 of IEC 60664-1:2007 ... 163
R.1 Impulse dielectric test ... 163
R.2 Example ... 163
Annex S (void) ... 165
Annex T (void) ... 166
Annex U (void) ... 167
Annex V (informative) Symbols to be used for thermal cut-outs ... 168
V.1 General ... 168
V.2 Non-self-resetting thermal cut-out (see 3.3.4) ... 168
V.3 Self-resetting thermal cut-out (see 3.3.3) ... 168
Annex W (normative) Coated printed circuit boards ... 169
W.1 Preamble ... 169
W.2 General ... 169
W.3 Cold ... 169
W.4 Rapid change of temperature ... 169
W.5 Additional tests ... 169
Bibliography ... 170
Index of defined terms ... 172

Figure 1 – IEC 61558 principle ... 13
Figure 2 – Mounting box for flush-type transformer ... 35
Figure 3 – Test pin (see IEC 61032, test probe 13) ... 46
Figure 4 – Standard test finger (see IEC 61032, test probe B) ... 47
Figure 5 – Example of back-to-back method – Single phase ... 55
Figure 6 – Example of back-to-back method – Three phase ... 55
Figure 7 – Amplitude spectrum density for random testing ... 67
Figure 8 – Normalised spectrum of shock ... 68
Figure 9 – Test voltage sequence ... 75
Figure 10 – Test configuration: single-phase equipment on star TN or TT system ... 77
Figure 11 – Abrasion resistance test for insulating coated layers ... 82
Figure 12 – Flexing test apparatus ... 99
Figure 13 – Test arrangement for checking mechanical withstanding of insulating materials in thin sheet layers ... 113
Figure 14 – Ball-pressure apparatus ... 121
Figure A.1 – Example 1 ... 126
Figure A.2 – Example 2 ... 127

AVA Documents
Document Sharing Hub
Full document details: IEC 61558-2-9 2024 EXV

Figure A.3 – Example 3 ... 127
Figure A.4 – Example 4 ... 127
Figure A.5 – Example 5 ... 128
Figure A.6 – Example 6 ... 128
Figure A.7 – Example 7 ... 129
Figure A.8 – Example 8 ... 129
Figure H.1 – Example of an electronic circuit with low-power points ... 142
Figure J.1 – Measuring network for touch-current ... 145
Figure M.1 – Examples for concentric type constructions ... 151
Figure M.2 – Examples for side-by-side type constructions ... 152
Figure M.3 – Examples for winding constructions without screen ... 152
Figure M.4 – Examples for wrapped winding constructions ... 153
Figure M.5 – Examples for winding constructions with screen ... 153
Figure N.1 – Transformer of class I construction with metal enclosure ... 154
Figure N.2 – Transformer of class II construction with metal enclosure ... 155
Figure N.3 – Transformer of class II construction with enclosure of insulating material ... 155
Figure P.1 – Transformer of class I construction ... 157
Figure P.2 – Transformer of class I construction with earthed metal screen ... 158
Figure P.3 – Transformer of class II construction with metal enclosure ... 158
Figure P.4 – Transformer of class II construction with enclosure of insulating material ... 159
Figure V.1 – Restored by manual operation ... 168
Figure V.2 – Restored by disconnection of the supply ... 168
Figure V.3 – Thermal link (see 3.3.5) ... 168
Figure V.4 – Self-resetting thermal cut-out ... 168

Table 1 – Symbols used on equipment or in instructions ... 41
Table 101 – Symbols indicating the kind of transformer ... 42
Table 102 – Output voltage ratio ... 50
Table 2 – Values of maximum temperatures in normal use ... 56
Table 3 – Explanation of the maximum winding temperatures required in Table 2 ... 57
Table 4 – Test temperature and testing time (in days) per cycle ... 58
Table 5 – Maximum values of temperatures under short-circuit or overload conditions ... 60
Table 6 – Values of T and k for fuses ... 61
Table 7 – Pull force on pins ... 65
Table 8 – Conditions for vibration testing (random) ... 66
Table 9 – Amplitude spectrum density ASD values for accelerated life testing ... 66
Table 10 – Frequency values depending on the weight of the specimen ... 67
Table 11 – Excitation values for vibration testing ... 67
Table 12 – Solid-object-proof transformer test ... 70
Table 13 – Values of insulation resistance ... 73
Table 14 – Table of dielectric strength test voltages ... 74
Table 15 – Limits for currents ... 77
Table 16 – Nominal cross-sectional areas of external flexible cables or cords ... 97

AVA Documents
Document Sharing Hub
Full document details: IEC 61558-2-9 2024 EXV

Table 17 – Pull and torque to be applied to external flexible cables or cords fixed to stationary and portable transformers 101
Table 18 – Torque to be applied to screws and connections 106
Table 19 – Torque test on glands 107
Table 20 – Clearances in mm 114
Table 21 – Creepage distances in mm 115
Table 22 – Distance through insulation in mm 116
Table 23 – Creepage distances and clearance between terminals for external connection 117
Table 24 – Values of FIW wires with minimum overall diameter and minimum test voltages according to the total enamel increase 119
Table A.1 – Width of groove values depending on the pollution degree 126
Table F.1 – Peak surge current of additional loads 136
Table I.1 – Dimensions of rectangular copper connectors 143
Table K.1 – Mandrel diameter 147
Table K.2 – Oven temperature 147
Table Q.1 – Degrees of protection against access to hazardous parts indicated by the first characteristic numeral 161
Table Q.2 – Degrees of protection against solid foreign objects indicated by the first characteristic numeral 161
Table Q.3 – Degrees of protection indicated by the second characteristic numeral 162
Table R.1 – Impulse test voltage according to 6.1.2.2.1 of IEC 60664-1:2007 163

Documents
Document Sharing Hub
Full document details: IEC 61558-2-9 2024 EXV

INTERNATIONAL ELECTROTECHNICAL COMMISSION

SAFETY OF TRANSFORMERS, REACTORS, POWER SUPPLY UNITS AND COMBINATIONS THEREOF –

Part 2-9: Particular requirements and tests for transformers and power supply units for class III handlamps

FOREWORD

1) The International Electrotechnical Commission (IEC) is a worldwide organization for standardization comprising all national electrotechnical committees (IEC National Committees). The object of IEC is to promote international co-operation on all questions concerning standardization in the electrical and electronic fields. To this end and in addition to other activities, IEC publishes International Standards, Technical Specifications, Technical Reports, Publicly Available Specifications (PAS) and Guides (hereafter referred to as "IEC Publication(s)"). Their preparation is entrusted to technical committees; any IEC National Committee interested in the subject dealt with may participate in this preparatory work. International, governmental and non-governmental organizations liaising with the IEC also participate in this preparation. IEC collaborates closely with the International Organization for Standardization (ISO) in accordance with conditions determined by agreement between the two organizations.
2) The formal decisions or agreements of IEC on technical matters express, as nearly as possible, an international consensus of opinion on the relevant subjects since each technical committee has representation from all interested IEC National Committees.
3) IEC Publications have the form of recommendations for international use and are accepted by IEC National Committees in that sense. While all reasonable efforts are made to ensure that the technical content of IEC Publications is accurate, IEC cannot be held responsible for the way in which they are used or for any misinterpretation by any end user.
4) In order to promote international uniformity, IEC National Committees undertake to apply IEC Publications transparently to the maximum extent possible in their national and regional publications. Any divergence between any IEC Publication and the corresponding national or regional publication shall be clearly indicated in the latter.
5) IEC itself does not provide any attestation of conformity. Independent certification bodies provide conformity assessment services and, in some areas, access to IEC marks of conformity. IEC is not responsible for any services carried out by independent certification bodies.
6) All users should ensure that they have the latest edition of this publication.
7) No liability shall attach to IEC or its directors, employees, servants or agents including individual experts and members of its technical committees and IEC National Committees for any personal injury, property damage or other damage of any nature whatsoever, whether direct or indirect, or for costs (including legal fees) and expenses arising out of the publication, use of, or reliance upon, this IEC Publication or any other IEC Publications.
8) Attention is drawn to the Normative references cited in this publication. Use of the referenced publications is indispensable for the correct application of this publication.
9) IEC draws attention to the possibility that the implementation of this document may involve the use of (a) patent(s). IEC takes no position concerning the evidence, validity or applicability of any claimed patent rights in respect thereof. As of the date of publication of this document, IEC had not received notice of (a) patent(s), which may be required to implement this document. However, implementers are cautioned that this may not represent the latest information, which may be obtained from the patent database available at https://patents.iec.ch. IEC shall not be held responsible for identifying any or all such patent rights.

This extended version (EXV) of the official IEC Standard provides the user with the comprehensive content of the Standard.

IEC 61558-2-9:2024 EXV includes the content of IEC 61558-2-9:2024, and the references made to IEC 61558-1:2017.

The specific content of IEC 61558-2-9:2024 is displayed on a blue background.

Documents
Document Sharing Hub

Full document details: IEC 61558-2-9 2024 EXV

IEC 61558-2-9 has been prepared by IEC technical committee 96: Transformers, reactors, power supply units and combinations thereof. It is an International Standard.

This third edition cancels and replaces the second edition published in 2010. This edition constitutes a technical revision.

This edition includes the following significant technical changes with respect to the previous edition:

a) adjustment of structure and references in accordance with IEC 61558-1:2017;
b) addition of a new symbol for power supply unit with linearly regulated output voltage;
c) document is not only valid for transformers for tungsten filament handlamps.

The text of this International Standard is based on the following documents:

Draft	Report on voting
96/593/FDIS	96/597/RVD

Full information on the voting for its approval can be found in the report on voting indicated in the above table.

The language used for the development of this document is English.

This document was drafted in accordance with ISO/IEC Directives, Part 2, and developed in accordance with ISO/IEC Directives, Part 1 and ISO/IEC Directives, IEC Supplement, available at www.iec.ch/members_experts/refdocs. The main document types developed by IEC are described in greater detail at www.iec.ch/standardsdev/publications.

It has the status of a group safety publication in accordance with IEC Guide 104.

This document is to be used in conjunction with IEC 61558-1:2017.

This document supplements or modifies the corresponding clauses in IEC 61558-1:2017, so as to convert that publication into the IEC standard: *Particular requirements and tests for transformers and power supply units for class III handlamps.*

A list of all parts in the IEC 61558 series published under the general title *Safety of transformers, reactors, power supply units and combinations thereof,* can be found on the IEC website.

Future standards in this series will carry the new general title as cited above. Titles of existing standards in this series will be updated at the time of the next edition.

Where this document states "*addition*", "*modification*" or "*replacement*", the relevant text of IEC 61558-1:2017 is to be adopted accordingly.

In this document, the following print types are used:

– requirements proper: in roman type;
– *test specifications: in italic type*;
– explanatory matter: in smaller roman type.

In the text of this document, the words in **bold** are defined in Clause 3.

Documents
Document Sharing Hub

Full document details: IEC 61558-2-9 2024 EXV

Subclauses, notes, figures and tables additional to those in IEC 61558-1:2017 are numbered starting from 101; supplementary annexes are entitled AA, BB, etc.

The committee has decided that the contents of this document will remain unchanged until the stability date indicated on the IEC website under webstore.iec.ch in the data related to the specific document. At this date, the document will be

- reconfirmed,
- withdrawn, or
- revised.

IMPORTANT – The "colour inside" logo on the cover page of this document indicates that it contains colours which are considered to be useful for the correct understanding of its contents. Users should therefore print this document using a colour printer.

Documents
Document Sharing Hub

Full document details: IEC 61558-2-9 2024 EXV

INTRODUCTION to IEC 61558-1:2017

This document covers safety requirements for **transformers**. Where the term **transformer** is used, it covers **transformers**, **reactors** and **power supply units** where applicable.

During the development of this document, to the extent possible, the requirements of IEC 60364 (all parts) were taken into consideration, so that a **transformer** can be installed in accordance with the wiring rules contained in that document. However, national wiring rules can differ.

This document recognizes the internationally accepted levels of protection against the possible electrical, mechanical, and fire hazards caused by **transformers** operating under normal conditions in accordance with the manufacturer's instructions. It also covers abnormal conditions which can occur in practice.

A **transformer** complying with this document will not necessarily be judged to comply with the safety principles of this document if, when examined and tested, it is found to have other features that impair the level of safety covered by these requirements.

A **transformer** employing materials or having forms of construction differing from those detailed in this document may be examined and tested according to the intent of the requirements and, if found to be substantially equivalent, may be judged to comply with the safety principles of this document.

The document dealing with non-safety aspects of electromagnetic compatibility (EMC) of **transformers** is IEC 62041. However, that document also includes tests that can subject the **transformer** to conditions involving safety aspects.

The objective of of IEC 61558-1 is to provide a set of requirements and tests considered to be generally applicable to most types of **transformers**, and which can be called up as required by the relevant part of IEC 61558-2. IEC 61558-1 is thus not to be regarded as a specification by itself for any type of **transformer**, and its provisions apply only to particular types of **transformers** to the extent determined by the appropriate part of IEC 61558-2. IEC 61558-1 also contains normative routine tests.

Each part of IEC 61558-2 in conjunction with this document contains all the necessary requirements for the **transformer** being covered and does not contain references to other parts of IEC 61558-2. For **transformers** with a protection index IP00 and associated **transformers**, it is possible to have circuits corresponding to different parts of IEC 61558-2 within the same construction (e.g. SELV output circuit according to IEC 61558-2-6 and a 230 V output circuit according to IEC 61558-2-4). However, if the **transformer** is covered by different parts IEC 61558-2, to the extent reasonable, the relevant part of IEC 61558-2 is applied to each function/application separately. If applicable, the effect of one function on the other is taken into consideration.

If an appropriate part of IEC 61558-2 does not exist for a particular **transformer** or group of **transformer**s, the nearest applicable part may be used as a guide to the requirements and tests.

However, individual countries may wish to consider its application, to the extent reasonable, to transformers not mentioned in the IEC 61558-2 series, and to transformers designed on new principles.

Where the requirements of any of the clauses of a part of IEC 61558-2 refer to IEC 61558-1 by the phrase "This clause of Part 1 is applicable", this phrase means that all the requirements of that clause of IEC 61558-1 are applicable, except those requirements that are clearly not applicable to the particular type of **transformer** covered by that part of IEC 61558-2.

AVA Documents
Document Sharing Hub

Full document details: IEC 61558-2-9 2024 EXV

The principle for the preparation of the different parts of IEC 61558-2 is as shown in Figure 1.

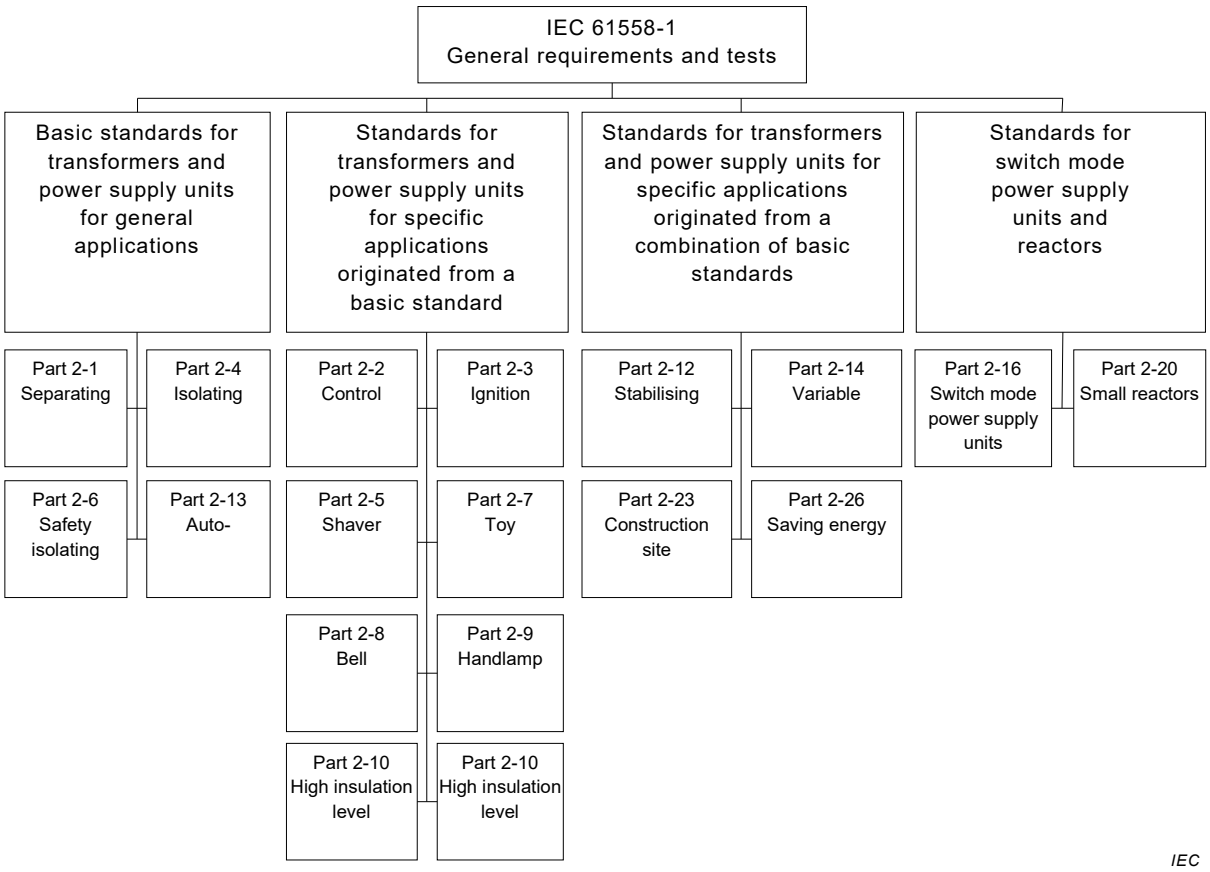

Figure 1 – IEC 61558 principle

Relevant clauses of this document (e.g. clauses dealing with thermal endurance test for windings) apply also to **transformers** forming an integral part of an appliance and which cannot be tested separately.

The IEC 61558 series consists of the following parts, under the general title *Safety of transformers, reactors, power supply units and combination thereof:*[1]

Part 1: General requirements and tests

Part 2-1: Particular requirements and tests for separating transformers for general applications

Part 2-2: Particular requirements and tests for control transformers

Part 2-3: Particular requirements and tests for ignition transformers for gas and oil burners

Part 2-4: Particular requirements and tests for isolating transformers

Part 2-5: Particular requirements and tests for shaver transformers and shaver supply units

Part 2-6: Particular requirements and tests for safety isolating transformers

Part 2-7: Particular requirements and tests for transformers for toys

Part 2-8: Particular requirements and tests for transformers for bells and chimes

Part 2-9: Particular requirements and tests for transformers for class III handlamps for tungsten filament lamps

[1] Some of the parts of this series published earlier appeared under the general title *Safety of power transformers, power supplies, reactors and similar products* or *Safety of power transformers, power supply units and similar* or *Safety of power transformers, power supply units and similar devices*. Future editions of these parts will be issued under the new general title indicated above.

AVA Documents Document Sharing Hub

Part 2-10: Particular requirements and tests for separating transformers with high insulation level and separating transformers with output voltages exceeding 1 000 V

Part 2-12: Particular requirements and tests for constant voltage transformers

Part 2-13: Particular requirements and tests for auto transformers

Part 2-14: Particular requirements and tests for variable transformers

Part 2-15: Particular requirements and tests for isolating transformers for the supply of medical locations

Part 2-16: Particular requirements and tests for switch mode power supply units and transformers for switch mode power supply units

Part 2-20: Particular requirements and tests for small reactors

Part 2-23: Particular requirements and tests for transformers and power supply units for construction sites

Part 2-26: Particular requirements and tests for transformers and power supply units all for saving energy and other purposes

Other parts are under consideration.

INTRODUCTION to IEC 61558-2-9:2024

IEC TC 96 has a group safety function in accordance with IEC Guide 104 for transformers other than those intended to supply distribution networks, in particular transformers and power supply units intended to allow the application of protective measures against electric shock as defined by TC 64, which is about Electrical installations and protection against electric shock, but in certain cases including the limitation of voltage and horizontal safety function for SELV, in accordance with IEC 60364-4-41.

The group safety function (GSF) is used because of responsibility for example for safety extra-low voltage (SELV) in accordance with IEC 61140:2016, 5.2.6 and IEC 60364-4-41:2005, 414.3.1 or control circuits in accordance with IEC 60204-1:2016, 7.2.4.

The group safety function is used for each part of IEC 61558-2 because different standards of the IEC 61558 series can be combined in one construction but in certain cases with no limitation of rated output power.

For example an auto-transformer in accordance with IEC 61558-2-13 can be designed with a separate SELV-circuit in accordance with the particular requirements for IEC 61558-2-6 relating to the general requirements of IEC 61558-1.

Documents
Document Sharing Hub

Full document details: IEC 61558-2-9 2024 EXV

SAFETY OF TRANSFORMERS, REACTORS, POWER SUPPLY UNITS AND COMBINATIONS THEREOF –

Part 2-9: Particular requirements and tests for transformers and power supply units for class III handlamps

1 Scope

This part of IEC 61558 deals with the safety of **transformers for class III handlamps** and **power supply units incorporating transformers for class III handlamps**. **Transformers** incorporating **electronic circuits** are also covered by this document.

NOTE 1 Safety includes electrical, thermal and mechanical aspects.

Unless otherwise specified, from here onward, the term **transformer** covers **transformers for class III handlamps** and **power supply units incorporating transformers for class III handlamps**.

For **power supply units** (linear) this document is applicable. For **switch mode power supply units** IEC 61558-2-16 is applicable together with this document. Where two requirements are in conflict, the most severe takes precedence.

This document is applicable to **stationary** or **portable**, single-phase, air-cooled (natural or forced) **independent** or **associated dry-type transformers.** The windings can be encapsulated or non-encapsulated.

The **rated supply voltage** does not exceed 1 000 V AC and the **rated supply frequency** and the **internal operating frequencies** do not exceed 500 Hz.

Transformers have the following additional characteristics:

– **the no-load output voltage** and the **rated output voltage** do not exceed 50 V AC or 120 V ripple-free DC;
– there is only a small difference between the **no-load output voltage** and the **rated output voltage**.

The **rated output** does not exceed 10 kVA.

This document is not applicable to external circuits and their components intended to be connected to the input terminals and output terminals of the **transformers**.

NOTE 2 **Transformers** covered by this document are only used in applications where **double** or **reinforced insulation** between circuits is required by the installation rules or by the end product standard.

Attention is drawn to the following, if necessary:

– for **transformers** intended to be used in vehicles, on board ships, and aircraft, additional requirements (from other applicable standards, national rules, etc.);
– measures to protect the **enclosure** and the components inside the enclosure against external influences such as fungus, vermin, termites, solar-radiation, and icing;
– the different conditions for transportation, storage, and operation of the **transformers**;
– additional requirements in accordance with other appropriate standards and national rules can be applicable to **transformers** intended for use in special environments.

Documents
Document Sharing Hub
Full document details: IEC 61558-2-9 2024 EXV

Future technological development of **transformers** can necessitate a need to increase the upper limit of the frequencies. Until then this document can be used as a guidance document.

This group safety publication focusing on safety guidance is primarily intended to be used as a product safety standard for the products mentioned in the scope but is also intended to be used by technical committees in the preparation of publications for products similar to those mentioned in the scope of this group safety publication, in accordance with the principles laid down in IEC Guide 104 and ISO/IEC Guide 51.

One of the responsibilities of a technical committee is, wherever applicable, to make use of basic safety publications and/or group safety publications in the preparation of its publications.

2 Normative references

The following documents are referred to in the text in such a way that some or all of their content constitutes requirements of this document. For dated references, only the edition cited applies. For undated references, the latest edition of the referenced document (including any amendments) applies.

IEC 60065:2014, *Audio, video and similar electronic apparatus – Safety requirements*

IEC 60068-2-6, *Environmental testing – Part 2-6: Tests – Test FC: Vibration (sinusoidal)*

IEC 60068-2-14, *Environmental testing – Part 2-14: Tests – Test N: Change of temperature*

IEC 60068-2-31, *Environmental testing – Part 2-31: Tests – Test Ec: Rough handling shocks, primarily for equipment-type specimens*

IEC 60068-2-75, *Environmental testing – Part 2-75: Tests – Test Eh: Hammer tests*

IEC 60076-1, *Power transformers – Part 1: General*

IEC 60076-11:2004, *Power transformers – Part 11: Dry-type transformers*

IEC TR 60083, *Plugs and socket-outlets for domestic and similar general use standardized in member countries of IEC*

IEC 60085:2007, *Electrical insulation – Thermal evaluation and designation*

IEC 60112:2003, *Method for the determination of the proof and the comparative tracking indices of solid insulating materials*

IEC 60127 (all parts), *Miniature fuses*

IEC 60127-3, *Miniature fuses – Part 3: Sub-miniature fuse-links*

IEC 60216 (all parts), *Electrical insulating materials – Thermal endurance properties*

IEC 60227 (all parts), *Polyvinyl chloride insulated cables of rated voltages up to and including 450/750 V*

IEC 60227-5:2011, *Polyvinyl chloride insulated cables of rated voltages up to and including 450/750 V – Part 5: Flexible cables (cords)*

Documents
Document Sharing Hub

Full document details: IEC 61558-2-9 2024 EXV

IEC 60245 (all parts), *Rubber insulated cables – Rated voltages up to and including 450/750 V*

IEC 60245-4:2011, *Rubber insulated cables – Rated voltages up to and including 450/750 V – Part 4: Cords and flexible cables*

IEC 60269 (all parts), *Low voltage fuses*

IEC 60269-2:2013, *Low voltage fuses – Part 2: Supplementary requirements for fuses for use by authorized persons (fuses mainly for industrial application) – Examples of standardized systems of fuses A to K*

IEC 60269-3:2010, *Low voltage fuses – Part 3: Supplementary requirements for fuses for use by unskilled persons (fuses mainly for household or similar applications) – Examples of standardized systems of fuses A to F*

IEC 60309 (all parts), *Plugs, socket-outlets and couplers for industrial purposes*

IEC 60317 (all parts), *Specifications for particular types of windings wires*

IEC 60317-0-7:2012, *Specifications for particular types of winding wires – Part 0-7: General requirements – Fully insulated (FIW) zero-defect enamelled round copper wire with nominal conductor diameter of 0,040 mm to 1,600 mm*

IEC 60317-56, *Specifications for particular types of winding wires – Part 56: Solderable fully insulated (FIW) zero-defect polyurethane enamelled round copper wire with nominal conductor diameter 0,040 mm to 1,600 mm, class 180*

IEC 60320 (all parts), *Appliance couplers for household and similar general purposes*

IEC 60320-2-3, *Appliance couplers for household and similar general purposes – Part 2-3: Appliance couplers with a degree of protection higher than IPX0*

IEC 60384-14:2013, *Fixed capacitors for use in electronic equipment – Part 14: Sectional specification: Fixed capacitors for electromagnetic interference suppression and connection to the supply mains*

IEC 60417*, Grapahical symbols for use on equipment*
(available at http://www.graphical-symbols.info/equipment)

IEC 60454 (all parts), *Pressure-sensitive adhesive tapes for electrical purposes*

IEC 60529:1989, *Degrees of protection provided by enclosures (IP Code)*
IEC 60529:1989/AMD1:1999
IEC 60529:1989/AMD2:2013

IEC 60664-1:2007, *Insulation coordination for equipment within low voltage systems – Part 1: Principles, requirements and tests*

IEC 60664-3:2016, *Insulation coordination for equipment within low-voltage systems – Part 3: Use of coating, potting or moulding for protection against pollution*

IEC 60691:2015, *Thermal-links – Requirements and application guide*

IEC 60695-2-10:2013, *Fire hazard testing – Part 2-10: Glowing/hot-wire based test methods – Glow-wire apparatus and common test procedure*

AVA Documents
Document Sharing Hub

Full document details: IEC 61558-2-9 2024 EXV

IEC 60695-2-11:2014, *Fire hazard testing – Part 2-11: Glowing/hot-wire based test methods – Glow-wire flammability test method for end-products*

IEC 60721-3-2, *Classification of environmental conditions – Part 3: Classification of groups of environmental parameters and their severities – Section 2: Transportation*

IEC 60730 (all parts), *Automatic electrical controls*

IEC 60730-1:2013, *Automatic electrical controls – Part 1: General requirements*

IEC 60851-3:2009, *Winding wires – Test methods: Part 3: Mechanical properties*

IEC 60851-5:2008, *Winding wires – Test methods: Part 5: Electrical properties*

IEC 60851-6:2012, *Winding wires – Test methods: Part 6: Thermal properties*

IEC 60884-1:2002, *Plugs and socket-outlets for household and similar purposes – Part 1: General requirements*
IEC 60884-1:2002/AMD1:2006
IEC 60884-1:2002/AMD2:2013

IEC 60884-2-4, *Plugs and socket-outlets for household and similar purposes – Part 2-4: Particular requirements for plugs and socket-outlets for SELV*

IEC 60898 (all parts), *Electrical accessories – Circuit-breakers for overcurrent protection for household and similar installations*

IEC 60906-1, *IEC system of plugs and socket-outlets for household and similar purposes – Part 1: Plugs and socket-outlets 16 A 250 V a.c.*

IEC 60906-3, *IEC system of plugs and socket-outlets for household and similar purposes – Part 3: SELV plugs and socket-outlets, 16 A 6 V, 12 V, 24 V, 48 V, a.c. and d.c.*

IEC 60947-7-1, *Low-voltage switchgear and controlgear – Part 7-1: Ancillary equipment – Terminal blocks for copper conductors*

IEC 60990:2016, *Methods of measurement of touch current and protective conductor current*

IEC 60998-2-1, *Connecting devices for low-voltage circuits for household and similar purposes – Part 2-1: Particular requirements for connecting devices as separate entities with screw-type clamping units*

IEC 60998-2-2, *Connecting devices for low-voltage circuits for household and similar purposes – Part 2-2: Particular requirements for connecting devices as separate entities with screwless-type clamping units*

IEC 60999-1, *Connecting devices – Electrical copper conductors – Safety requirements for screw-type and screwless-type clamping units – Part 1: General requirements and particular requirements for clamping units for conductors from 0,2 mm^2 up to 35 mm^2 (included)*

IEC 61032, *Protection of persons and equipment by enclosures – Probes for verification*

IEC 61058-1:2016, *Switches for appliances – Part 1: General requirements*

IEC 61058-1-1:2016, *Switches for appliances – Part 1-1: Requirements for mechanical switches*

AVA Documents
Document Sharing Hub

Full document details: IEC 61558-2-9 2024 EXV

IEC 61140:2016, *Protection against electric shock – Common aspects for installation and equipment*

IEC 61373, *Railway applications – Rolling stock equipment – Shock and vibration tests*

IEC 61558-1:2017, *Safety of transformers, reactors, power supply units and combinations thereof – Part 1: General requirements and tests*

IEC 61558-2-16:2021, *Safety of transformers, reactors, power supply units and combinations thereof – Part 2-16: Particular requirements and tests for switch mode power supply units and transformers for switch mode power supply units for general applications*

ISO 8820 (all parts), *Road vehicles – Fuse-links*

EN 50075:1990, *Specification for flat non-wirable two-pole plugs 2.5 A 250 V, with cord, for the connection of class II-equipment for household and similar purposes*

DIN 43671:1975, *Copper bus bars; design for continuous current*

DIN 43670:1975, *Aluminium bus bars; design for continuous current*

DIN 43670-2:1985, *Aluminium bus bars copper cladding; design for continuous current*

3 Terms and definitions

For the purposes of this document, the terms and definitions given in IEC 61558-1:2017 apply, except as follows:

ISO and IEC maintain terminological databases for use in standardization at the following addresses:

- IEC Electropedia: available at http://www.electropedia.org/
- ISO Online browsing platform: available at http://www.iso.org/obp

NOTE Further definitions of **transformers** intended for particular use are indicated in the relevant parts of IEC 61558-2.

When the term **transformer** is used it covers **transformer**, **reactor** and **power supply unit** where applicable.

Unless otherwise specified, the terms “voltage” and “current” imply the RMS values of alternating voltage and current, and for direct voltage and current, they imply the corresponding arithmetic mean values.

"Ripple-free" is conventionally an RMS ripple voltage not more than 10 % of the DC component.

An index of often used terms and definitions is provided at the end of this document.

3.1 Transformers

3.1.1
transformer
static piece of apparatus with two or more windings which, by electromagnetic induction, transforms a system of alternating voltage and current into another system of voltage and current usually of different values and at the same frequency for the purpose of transmitting electrical power

Note 1 to entry: The term frequency also implies that the waveform remains the same.

[SOURCE: IEC 60050-421:1990, 421-01-01, modified – “power” deleted and “NOTE” added]

AVA Documents
Document Sharing Hub

Full document details: IEC 61558-2-9 2024 EXV

3.1.2
isolating transformer
transformer with **protective separation** between the **input winding(s)** and **output winding(s)**

3.1.3
safety isolating transformer
isolating transformer designed to deliver **SELV** (safety extra-low voltage) or **PELV** (protective extra-low voltage)

3.1.4
separating transformer
transformer with **input winding**(s) separated from the **output winding**(s) by at least **basic insulation**

3.1.5
auto-transformer
transformer in which **input** and **output windings** have a common part

Note 1 to entry: **Auto-transformers** may have supplementary windings or tappings for adjustment purposes.

Note 2 to entry: Transformers with windings separated at least by functional insulation and electrically connected, will be treated as **auto-transformers**.

3.1.6
associated transformer
transformer designed to supply a specific appliance or equipment, or a part of them, and being either an **incorporated transformer** or a **transformer for specific use**

3.1.6.1
incorporated transformer
associated transformer designed to be built into a specific appliance or equipment, or into a part of them, and the **enclosure** of which provides protection against electric shock

3.1.6.2
transformer for specific use
associated transformer fixed to or delivered with the appliance or equipment, without being incorporated in this appliance or equipment and having its own **enclosure** which provides protection against electric shock

3.1.7
independent transformer
transformer designed to supply unspecified appliances and intended to be used without any additional **enclosure** which provides protection against electric shock

Note 1 to entry: Such a **transformer** can be either a portable **transformer** or a stationary **transformer**.

3.1.8
void

3.1.9
short-circuit proof transformer
transformer not exceeding the specified temperature limits when overloaded or short-circuited, and which continues to meet all the requirements of this document after removal of the overload or short-circuit and is not required to operate continuously under short-circuit or overload condition

Note 1 to entry: “Continues to meet all the requirements of this document” does not imply that all types of short-circuit proof **transformers** continue to operate.

AVA Documents
Document Sharing Hub

Full document details: IEC 61558-2-9 2024 EXV

3.1.9.1
non-inherently short-circuit proof transformer
short-circuit proof transformer equipped with a protective device or with an **intentional weak part** which opens the **input circuit** or the **output circuit**, or reduces the current in the **input circuit** or the **output circuit** when the **transformer** is overloaded or short-circuited, and continues to meet all the requirements of this document after removal of the overload or short circuit

3.1.9.1.1
non-inherently short-circuit proof transformer with resettable, self-resetting or replaceable protective device
short-circuit proof transformer equipped with a protective device which after resetting or replacing continues to operate

Note 1 to entry: Examples of self-resetting or non self-resetting protective devices are fuses, **overload relays**, thermal fuses, thermal links, **thermal cut-outs** and PTC resistors and automatic break-off mechanical devices.

3.1.9.1.2
non-inherently short-circuit proof transformer with non-self-resetting or non-replaceable protective device
short-circuit proof transformer equipped with a non-self-resetting or non-replaceable protective device or with a non-replaceable **intentional weak part**, which continues to meet all the requirements of this document after removal of the overload or short circuit, but does not continue to operate after the overload or short-circuit is removed

3.1.9.2
inherently short-circuit proof transformer
short-circuit proof transformer not equipped with any device for protection against overload or short circuit

Note 1 to entry: The **transformer**, by construction, does not exceed the specified temperature limits, and continues to operate and meet all the requirements of this document after the removal of the overload or short circuit.

3.1.10
non-short-circuit proof transformer
transformer intended to be protected against excessive temperature by means of a protective device, not provided with but stated on the **transformer**, and which continues to meet all the requirements of this document after the removal of the overload or short circuit and, if applicable, after resetting or replacing the protective device

3.1.11
fail-safe transformer
transformer equipped with a protective device or with an **intentional weak part**, which permanently fails to function by the interruption of the **input circuit** when the **transformer** is overloaded or short-circuited, but presents no danger to the user or surroundings

Note 1 to entry: It continues to meet all the requirements of this document after removal of the overload or short circuit.

Note 2 to entry: "Continues to meet all the requirements of this document" does not imply that the fail-safe **transformer** continues to operate. After failing it fulfils the dielectric strength test based on 35 % of the original values (see 15.5).

3.1.12
portable transformer
either a **transformer** which is moved while in operation, or a **transformer** which can easily be moved from one place to another while connected to the supply or being a plug-in **transformer**

Documents
Document Sharing Hub
Full document details: IEC 61558-2-9 2024 EXV

3.1.13
flush-type transformer
transformer designed to be mounted in a flush-type mounting box

3.1.14
fixed transformer
transformer intended to be used while fastened to a support in a position which may be specified by the manufacturer

3.1.15
stationary transformer
either a **fixed transformer** or a **transformer** having a mass exceeding 18 kg and provided with no carrying handle(s)

3.1.16
hand-held transformer
portable **transformer** intended to be held in the hand during normal use

3.1.17
void

3.1.18
dry-type transformer
transformer incorporating non-liquid dielectric media, and the windings may be impregnated or encapsulated

3.1.19
power supply unit
electronic device incorporating **transformer(s)** and electronic circuitry(ies), that converts electrical power into single or multiple power outputs

Note 1 to entry: It may also isolate the **input circuit** from the **output circuit**, and regulate and/or convert the output voltage and current. The device may consist of one or more individual units with identical or different waveforms and frequencies including DC output, and the **internal operating frequency** and waveform are different from the supply frequency and waveform and the **internal operating frequency** does not exceed 500 Hz.

3.1.20
switch mode power supply unit
electronic device incorporating **transformer(s)** and electronic circuitry(ies), that converts electrical power into single or multiple power outputs

Note 1 to entry: It may also isolate the **input circuit** from the **output circuit**, and regulate and/or convert the output voltage and current. The device may consist of one or more individual units with identical or different waveforms and frequencies including DC output, and the **internal operating frequency** and waveform are different from the supply frequency and waveform and the **internal operating frequency** does exceed 500 Hz, but not exceed 100 MHz.

3.1.21
reactor
arrangement comprising one or more windings with an impedance depending on the frequency, working in accordance with the principle of self-induction whereby a magnetising current generates a magnetic field through a magnetically effective core or through air

Note 1 to entry: **Reactors** with toroidal cores are also included in this definition.

3.1.101
transformer for class III handlamps
associated **safety isolating transformer** intended to supply one or more class III handlamps

Documents
Document Sharing Hub
Full document details: IEC 61558-2-9 2024 EXV

3.1.102
power supply unit incorporating transformer for class III handlamps
power supply unit where an associated **safety isolating transformer** is used intended to supply one or more **class III handlamps**

3.2 General terms

3.2.1
external flexible cable
external flexible cord
flexible cable or cord for external connection to the **input** or **output circuit**, fixed to or assembled with the **transformer** according to type X, type Y or type Z attachment

3.2.1.1
type X attachment
method of attachment enabling easy replacement of the ordinary or especially prepared cable or cord

3.2.1.2
type Y attachment
method of attachment intended to be replaced only by the manufacturer, his service agent, or similar qualified person

Note 1 to entry: **Type Y attachments** may be used either with ordinary flexible cables or cords, or with special cables or cords.

3.2.1.3
type Z attachment
method of attachment preventing replacement of the flexible cable or cord without breaking or destroying a part of the transformer

3.2.2
power supply cord
external flexible cable or cord used to supply the **input circuit**

Note 1 to entry: **Power supply cords** are:

– fixed to or assembled with the **transformer** by type **X, Y** or **Z attachment**, or
– connected to the **transformer** by an appliance coupler.

3.2.3
connecting lead
lead connecting the end of a winding to the terminal of the **transformer**

Note 1 to entry: **Connecting leads** are considered as an internal wire.

3.2.4
body
accessible **conductive parts**, shafts, handles, knobs, grips and the like, accessible metal fixing screws and metal foil applied on accessible surfaces of insulating material

3.2.5
accessible part
parts which may be touched with the standard test finger after correct installation of the **transformer**

3.2.6
detachable part
part which can be removed without the aid of a **tool**

Documents
Document Sharing Hub
Full document details: IEC 61558-2-9 2024 EXV

3.2.7
non-detachable part
part which can be removed only with the aid of a **tool**

3.2.8
tool
screwdriver, a coin, or any other object which may be used to operate a screw or similar fixing means

3.2.9
enclosure
housing affording the type and degree of protection suitable for the intended application

Note 1 to entry: Protection against for example mechanical impacts, corrosion, fungi, vermin, solar radiation, icing and moisture.

[SOURCE: IEC 60050-195:1998, 195-02-35, modified – “NOTE” added]

3.2.10
intermediate conductive part
non-accessible conductive part situated between **hazardous-live-parts** or the **body** and other **hazardous-live-part**

3.2.11
conductive part
part which can carry electric current

[SOURCE: IEC 60050-195:1998, 195-01-06]

3.2.12
electronic component
part in which conduction is achieved principally by electrons moving through a vacuum, gas or semiconductor

Note 1 to entry: Neon indicators are not considered to be electronic components

3.2.13
electronic circuit
circuit incorporating at least one electronic component

3.2.14
void

3.2.15
electrical separation
separation between conductive parts by means of air and/or solid insulation

3.3 Operations and protections

3.3.1
all pole disconnection
disconnection of all live conductors by a single switching action

Note 1 to entry: **Protective earthing conductor** is not considered to be a supply conductor.

Note 2 to entry: A neutral conductor is considered to be a supply conductor.

Note 3 to entry: National wiring rules may or may not require the disconnection of the neutral conductor.

Documents
Document Sharing Hub
Full document details: IEC 61558-2-9 2024 EXV

3.3.2
thermal cut-out
temperature sensitive device which limits the temperature of a **transformer**, or of parts of it, during abnormal operation by automatically opening the circuit or by reducing the current, and which is so constructed that its setting cannot be altered by the user

3.3.3
self-resetting thermal cut-out
thermal cut-out which automatically restores the current after the relevant part of the **transformer** has cooled down sufficiently, or the load has been removed

3.3.4
non-self-resetting thermal cut-out
thermal cut-out requiring manual resetting or replacement of a part to restore the current

3.3.5
thermal-link
thermal cut-out which operates only once

3.3.6
overload relay
current-operated switch which protects a circuit from overload by opening when the current in that circuit reaches a predetermined value and which remains in the open position

3.3.7
intentional weak part
part other than overload protective device (fuses, circuit-breaker, thermal cut-outs, etc.) intended to rupture under conditions of abnormal operation to prevent the occurrence of a condition which could impair compliance with this document

Note 1 to entry: Such a part may be a replaceable component, such as a resistor or a capacitor or a non replaceable part of a component such as an inaccessible weak point in a winding.

3.3.8
working voltage
highest RMS value of the AC or DC voltage which may occur (locally) across any insulation at **rated supply voltage** under no-load or normal operating conditions, transients being disregarded

Note 1 to entry: When considering the insulation system between windings not intended to be connected together, the **working voltage** is considered to be the highest voltage occurring on any of these windings.

Note 2 to entry: On three phase systems, the **working voltage** can be different from the nominal voltage.

3.3.9
short-circuit voltage
voltage to be applied to the **input winding**, when the windings are at ambient temperature, to produce in the short-circuited **output winding** a current equal to the **rated output current**

Note 1 to entry: The **short-circuit voltage** is usually expressed as a percentage of the **rated supply voltage**.

3.3.10
duty-type
continuous or conventional periodic duty consisting of one or more sets of loads remaining constant for the durations specified

3.3.10.1
continuous duty
operation for an unlimited period

AVA Documents
Document Sharing Hub
Full document details: IEC 61558-2-9 2024 EXV

3.3.10.2
short-time duty cycle
operation for a specified period, starting from cold, the intervals between each period of operation being sufficient to allow the **transformer** to cool down to approximately ambient temperature

3.3.10.3
intermittent duty cycle
operation in a series of specified identical cycles

3.3.11
protective earthing conductor
PE
protective conductor provided for protective earthing

[SOURCE: IEC 60050-195:1998, 195-02-11]

3.4 Circuits and windings

3.4.1
input circuit
circuit intended to be connected to the supply consisting of the **input winding** and the **internal circuits**

3.4.2
output circuit
circuit to which the distribution circuit, appliance or other equipment is to be connected, consisting of the **output winding** and the **internal circuits**

3.4.3
input winding
winding of the **input circuit**

3.4.4
output winding
winding of the **output circuit**

3.4.5
internal circuit
circuit which consists of components, interconnections and connections to the terminals and the windings, excluding protective earthing circuit

3.4.6
fully insulated winding wire
FIW
wire according to IEC 60317-0-7, IEC 60317-56 and tested according to IEC 60851-5:2008 which is a zero-defect wire construction

3.4.7
grade of FIW
range of overall diameter of a wire (FIW3 to FIW9)

3.4.8
insulated winding wire
winding wire for basic-, supplementary-, or reinforced insulation

Note 1 to entry: Requirements are provided in Annex K.

Documents
Document Sharing Hub

Full document details: IEC 61558-2-9 2024 EXV

3.4.9
extruded winding wire
TIW
winding wires with basic-, supplementary-, or reinforced insulation obtained by extrusion

Note 1 to entry: The term TIW is commonly used to cover all types of extruded winding wires.

3.5 Ratings

3.5.1
rated supply voltage
supply voltage (for polyphase supply, the phase-to-phase voltage) assigned to the **transformer** by the manufacturer for the specified operating conditions of the **transformer**

3.5.2
rated supply voltage range
supply voltage range assigned to the **transformer** by the manufacturer, expressed by its lower and upper limits

3.5.3
rated frequency
frequency assigned to the **transformer** by the manufacturer for the specified operating conditions of the **transformer**

3.5.3.1
rated supply frequency
frequency on the input of the **transformer** assigned by the manufacturer

Note 1 to entry: The supply frequency is the frequency of the mains.

3.5.3.2
internal operational frequency
highest internal frequency assigned by the manufacturer as the operating frequency of a **transformer** or other components built into a **power supply unit**

3.5.4
rated output current
output current at **rated supply voltage**, **rated supply frequency** and **rated output voltage,** at **rated power factor**, assigned to the **transformer** by the manufacturer for the specified operating conditions of the **transformer**

3.5.5
rated output voltage
output voltage (for polyphase supply, the phase-to-phase voltage) at **rated supply voltage**, **rated supply frequency** and **rated output current**, at **rated power factor**, assigned to the **transformer** by the manufacturer for the specified operating conditions of the **transformer**

3.5.6
rated power factor
power factor assigned to the **transformer** by the manufacturer for the specified operating conditions of the **transformer**

3.5.7
rated output
product of the **rated output voltage** and the **rated output current** or, for three-phase **transformers**, $\sqrt{3}$ times the product of the **rated output voltage** and the **rated output current**

Documents
Document Sharing Hub
Full document details: IEC 61558-2-9 2024 EXV

Note 1 to entry: If the **transformer** has more than one **output winding** or a tapped **output winding**, the **rated output** denotes the maximum sum of the products of **rated output voltage** and **rated output current** for **output circuits** intended to be loaded simultaneously.

3.5.8
rated ambient temperature
t_a
maximum temperature at which the **transformer** may be operated continuously under normal conditions of use

Note 1 to entry: The value of the **rated ambient temperature** (t_a) does not preclude temporary operation of the **transformer** at a temperature not exceeding (t_a + 10) °C.

3.5.9
rated minimum ambient temperature
t_{amin}
minimum temperature at which the **transformer** may be operated continuously under normal conditions of use

3.5.10
rated minimum temperature
t_{min}
minimum temperature only for transportation and storage

3.5.11
overvoltage category
numeral defining a transient overvoltage condition

Note 1 to entry: Overvoltage categories I, II, III and IV are used, see IEC 60664-1:2007, 4.3.3.2.

[SOURCE: IEC 60050-581:2008, 581-21-02, modified – “NOTE” added]

3.5.11.1
overvoltage category I
OVC I
equipment for connection to circuits in which measures are taken to limit transient overvoltages to an appropriately low level

Note 1 to entry: Examples of such equipment are those containing electronic circuits protected to this level. However, unless the circuits are designed to take the temporary overvoltages into account, equipment of overvoltage category I cannot be directly connected to the mains supply.

3.5.11.2
overvoltage category II
OVC II
energy-consuming equipment to be supplied from the fixed installation

Note 1 to entry: Examples of that equipment are transformers for household appliances, telecommunications, toys, and similar loads.

3.5.11.3
overvoltage category III
OVC III
equipment used in fixed installations and for cases where the reliability and the availability of the equipment is subject to special requirements

Note 1 to entry: Examples of such equipment are transformers in fixed installations and **transformers** for industrial use with permanent connection to the fixed installation.

Documents
Document Sharing Hub
Full document details: IEC 61558-2-9 2024 EXV

3.5.11.4
overvoltage category IV
OVC IV
equipment used at the origin of installation

Note 1 to entry: Examples of such equipment are **transformers** in fixed installations of power plants or immediate to such installations.

3.6 No-load values

3.6.1
no-load input
input of the **transformer** when connected to **rated supply voltage** at **rated supply frequency**, with no load on the output

3.6.2
no-load output voltage
output voltage when the **transformer** is connected to **rated supply voltage** at **rated supply frequency**, with no load on the output

3.7 Insulation

3.7.1
basic insulation
insulation of **live parts** which provides basic protection

Note 1 to entry: **This concept does not apply to insulation used exclusively for functional purposes**, for example wire enamel.

[SOURCE: IEC 60050-195:1998, 195-06-06, modified – “hazardous” deleted and “,for example wire enamel” added]

3.7.1.1
functional insulation
insulation between conductive parts, necessary for the proper functioning of the transformer

Note 1 to entry: For **transformers**, proper functional insulation may have influence on the safety. **Functional insulation** is checked by the requirements of this document but additional requirements may exist in IEC 61558-2 (all parts).

[SOURCE: IEC 60050-195:1998, 195-02-41, modified – “transformer” replaces “equipment” and “NOTE” added]

3.7.2
supplementary insulation
independent insulation of **hazardous-live-parts** applied in addition to **basic insulation,** for fault protection

Note 1 to entry: Fault protection means in order to provide protection against electric shock in the event of a **basic insulation** failure.

[SOURCE: IEC 60050-195:1998, 195-06-07, modified – “hazardous-live-parts” and “NOTE” added]

3.7.3
double insulation
insulation comprising both **basic insulation** and **supplementary insulation**

[SOURCE: IEC 60050-195:1998, 195-06-08]

Documents
Document Sharing Hub
Full document details: IEC 61558-2-9 2024 EXV

3.7.4
reinforced insulation
insulation of **hazardous-live-parts**, which provides a degree of protection against electric shock equivalent to **double insulation**

Note 1 to entry: Reinforced insulation may comprise several layers which cannot be tested singly as basic insulation or supplementary insulation.

[SOURCE: IEC 60050-195:1998, 195-06-09]

3.7.5
class I transformer
transformer in which protection against electric shock does not rely on **basic insulation** only, but which includes an additional safety precaution such as a protective earthing terminal for the connection of accessible **conductive parts** to the fixed wiring of the installation

Note 1 to entry: The protective earthing connection prevents that accessible **conductive parts** become live in the event of a **basic insulation** failure.

Note 2 to entry: **Class I transformers** may have parts with **double** or **reinforced insulation**.

3.7.6
class II transformer
transformer in which protection against electric shock does not rely on **basic insulation** only, but in which additional safety precautions such as **double insulation** or **reinforced insulation** are provided, there being no provision for protective earthing or reliance upon installation conditions

Note 1 to entry: A **class II transformer** may be provided with means for maintaining the continuity of protective earthing circuits, provided that such means are inside the **transformer**, and are insulated from accessible surfaces according to the requirements of **class II**.

Note 2 to entry: In certain cases, it may be necessary to distinguish between "all insulated" and "metal encased" **class II transformers**.

Note 3 to entry: A **transformer** having a durable and substantially continuous **enclosure** of insulating material which envelops all **conductive parts**, with the exception of small **conductive parts**, such as nameplates, screws and rivets, which are isolated from **hazardous-live-parts** by insulation at least equivalent to **reinforced insulation**, is called an all insulated **class II transformer**.

Note 4 to entry: A **transformer** having a substantially continuous metal **enclosure**, in which **double insulation** is used throughout, except for those parts where **reinforced insulation** is used because the application of **double insulation** is manifestly impracticable, is called a metal encased **class II transformer**.

Note 5 to entry: If a **transformer** with **double insulation** and/or **reinforced insulation** throughout has a protective earthing terminal, it is deemed to be of **class I** construction.

Note 6 to entry: A **class II transformer** may be provided with functional earthing circuit.

3.7.7
class III transformer
transformer in which protection against electric shock relies on supply at **SELV**, and in which voltages higher than those of **SELV** are not generated

Note 1 to entry: The classification I, II or III does not refer to the insulation system between **input windings** and **output windings**.

3.7.8
clearance
CL
shortest distance in air between two **conductive parts**

Note 1 to entry: For the purpose of determining a **clearance** to **accessible parts**, the accessible surface of an insulating **enclosure** is to be considered conductive as if it were covered by a metal foil wherever it can be touched by the standard test finger (see Figure 4).

Documents
Document Sharing Hub
Full document details: IEC 61558-2-9 2024 EXV

[SOURCE: IEC 60664-1:2007, 3.2, modified – “NOTE” added]

3.7.9
creepage distance
CR
shortest distance (through air) along the surface of an insulating material between two **conductive parts**

Note 1 to entry: For the purpose of determining a **creepage distance** from **transformer conductive parts** to **accessible parts**, the accessible surface of an insulating **enclosure** is to be considered conductive as if it were covered by a metal foil wherever it can be touched by the standard test finger (see Figure 4).

[SOURCE: IEC 60050-151:2001, 151-15-50, modified – “through air” and “NOTE” added]

3.7.10
pollution
any addition of foreign matter, solid, liquid, or gaseous, that can result in a reduction of dielectric strength or surface resistivity of the insulation

[SOURCE: IEC 60664-1:2007, 3.11]

3.7.11
micro-environment
immediate environment of the insulation which particularly influences the dimensioning of the **creepage distances** or **clearances**

Note 1 to entry: The **micro-environment** of the **creepage distance** or **clearance** and not the environment of the equipment determines the effect on the insulation. The **micro-environment** might be better or worse than the environment of the equipment. It includes all factors influencing the insulation, such as climatic and electromagnetic factors and generation of **pollution**, etc.

[SOURCE: IEC 60664-1:2007, 3.12.2, modified – “or clearances” and “NOTE” added]

3.7.12
degree of pollution
degree of pollution in the **micro-environment** established for the purpose of evaluating **clearances** and **creepage distances**

3.7.12.1
pollution degree 1
P1
pollution degree in which no **pollution** or only dry, non-conductive **pollution** occurs

Note 1 to entry: The **pollution** has no influence.

3.7.12.2
pollution degree 2
P2
pollution degree in which only non-conductive **pollution** occurs, except that occasionally a temporary conductivity caused by condensation is to be expected

Note 1 to entry: **Transformers** having a reasonably tight **enclosure** are considered to have **pollution degree 2** (P2), hermetic sealing is not required.

3.7.12.3
pollution degree 3
P3
pollution degree in which conductive **pollution** occurs, or dry non-conductive **pollution** occurs which becomes conductive due to the condensation which is to be expected

Documents
Document Sharing Hub
Full document details: IEC 61558-2-9 2024 EXV

3.7.13
protective separation
separation between circuits by means of basic and supplementary protection (**basic insulation** plus **supplementary insulation** or **protective screening**) or by an equivalent protective provision (for example **reinforced insulation**)

[SOURCE: IEC 60050-195:1998, 195-06-19, modified – "(electrically)" removed and definition redrafted]

3.7.14
protective screening
separation from **hazardous-live-parts** by means of an interposed conductive screen, connected to the means of connection for an external protective earthing conductor

[SOURCE: IEC 60050-195:1998, 195-06-18, modified – "(electrically)" removed and definition redrafted]

3.7.15
ELV
extra-low voltage
voltage which does not exceed 50 V AC or 120 V ripple free DC between conductors, or between any conductor and protective earthing

3.7.16
SELV
safety extra low voltage
ELV in a circuit which is isolated from the mains supply by such means as a **safety isolating transformer**

Note 1 to entry: Maximum voltage lower than 50 V AC or 120 V ripple-free DC may be specified in particular requirements, especially when direct contact with **live parts** is allowed.

Note 2 to entry: The maximum peak value does not exceed 140 V for a nominal 120 V ripple-free DC system and 70 V for a nominal 60 V ripple-free DC system.

3.7.17
SELV-circuit
ELV circuit with **protective separation** from other circuits, and which has no provisions for earthing of the circuit nor of the exposed **conductive parts**

3.7.18
PELV-circuit
protective extra low voltage
ELV circuit with **protective separation** from other circuits and which, for functional reasons, may be earthed and/or the exposed **conductive parts** of which may be earthed

Note 1 to entry: **PELV-circuits** are used where the circuits are earthed and **SELV** is not required.

3.7.19
FELV-circuit
functional extra low voltage-circuit
ELV circuit having the **ELV** voltage for functional reasons and not fulfilling the requirements for **SELV** or **PELV**

3.7.20
live part
conductor or conductive part intended to be energised in normal operation, including a neutral conductor, but by convention not a PEN conductor or PEM conductor or PEL conductor

Note 1 to entry: This concept does not necessarily imply a risk of electric shock.

AVA Documents
Document Sharing Hub

Full document details: IEC 61558-2-9 2024 EXV

Note 2 to entry: For definitions of PEM and PEL see IEC 60050-195:1998, 195-02-13 and 195-02-14

[SOURCE: IEC 60050-195:1998, 195-02-19, modified – “NOTE 2” added]

3.7.21
hazardous-live-part
live part which, under certain conditions, can give a harmful electric shock

Note 1 to entry: In case of high voltage, a hazardous voltage may be present on the surface of solid insulation. In such a case, the surface is considered to be a **hazardous-live-part**

[SOURCE: IEC 60050-195:1998, 195-06-05, modified – “NOTE” added]

3.8 Touch current and protective earthing conductor current

3.8.1
touch current
electric current passing through a human body or through an animal body when it touches one or more accessible parts of an installation or of equipment

[SOURCE: IEC 60050-195:1998, 195-05-21]

3.8.2
protective earthing conductor current
current which flows in a protective earthing conductor

Note 1 to entry: This current may have influence on the operation of RCDs (residual current protection devices) connected in the same circuit.

4 General requirements

4.1 Transformers shall be so designed and manufactured that when used, installed and maintained according to the manufacturer's instructions, they cause no danger which could reasonably be foreseen to persons or surroundings, even in the event of careless use as may occur in normal service.

In general, compliance is checked by carrying out all the relevant tests.

4.2 When associated transformers are used in an appliance or equipment for which a relevant appliance or equipment standard exists, they may be tested under the conditions present in the appliance or equipment for which they are intended.

*If a **transformer** is tested under the conditions present in the appliance or equipment for which it is intended, it shall comply with the following clauses or subclauses thereof of this document:*

> *1 – 2 – 3 – 4 – 5.1 – 5.2 – 5.3 – 5.4 – 5.5 – 5.6 – 5.7 – 7.1 – 7.2 – 7.5 – 7.6 – 7.8 – 8.2 – 8.11 –14.1 – except for the requirements in Table 2 starting with the first: “external **enclosures**”..., 14.2 – 14.3 – 15.1, restricted to the first box of* Table 5 *– 18.1 – 18.2 – 18.3 only between input an output circuits – 18.4 – 19.1 – 19.12 – 20.10 – 26.1 – 26.2 – 26.3 – Annexes A, G, L, M, N, P*

Other clauses shall be taken from the relevant product standard. If the product standard does not fully cover the remaining clauses, the corresponding missing clauses of this **transformer** document shall be used instead.

Documents
Document Sharing Hub
Full document details: IEC 61558-2-9 2024 EXV

4.3 For other hazards not covered by this document (e.g. EMF, functional safety linked to electric, magnetic and electromagnetic disturbances, etc.), the manufacturer has to perform a risk assessment.

5 General notes on tests

5.1 Tests according to this document are:

– type tests (defined from 8.1 up to Clause 28);

– routine tests (defined in Annex L).

*Each sample **transformer** shall comply with all the relevant tests. In order to reduce the testing time and allow for any tests which may be destructive, the manufacturer may submit additional **transformers** or parts of **transformers**, provided that they are of the same materials and designs as the original **transformer**, and that the results of the tests are the same as if carried out on an identical **transformer**. Where the test for compliance is shown as being "by inspection", this shall include any necessary handling.*

Unless otherwise specified, the tests shall be carried out under steady-state conditions.

***Transformers** intended to be used with **non-detachable** flexible cables or cords are tested with the flexible cable or cord connected to the **transformer**.*

5.2 *Tests are carried out on specimens as delivered and installed as in normal use taking into account the manufacturer's installation instructions. If it is not necessary to do the tests of 14.3, 15.5, 16.4 and 26.2, the number of specimens is one for all **rated outputs**.*

If the tests of 14.3 need to be performed, three additional specimens shall be used. Three more specimens are required if the tests need to be repeated.

If the tests of 15.5 need to be performed, three additional specimens shall be used. These specimens are used only for the tests of 15.5.

If the tests of 16.4 need to be performed, they are carried out on four additional specimens.

If the tests of 26.2 need to be performed, they are carried out on three additional specimens.

*For components tested under conditions prevailing in the **transformer**, the number of specimens is that required by the relevant standard.*

*For testing a series of **transformers**, see Annex B.*

All specimens shall withstand all the relevant tests, except as mentioned in 14.3.

NOTE 1 For **associated transformers**, the equipment standard can prescribe other numbers of specimens to be tested.

NOTE 2 In case of non-replaceable and non-resettable protective devices, the compliance is checked on a specially prepared specimen.

5.3 *Tests are carried out in the order of the clauses and subclauses, unless otherwise specified.*

5.4 *If the test results are not influenced by the temperature of the ambient air, the ambient temperature is, in general, maintained at (20 ± 5) °C. Otherwise and if, however, the temperature attained by any part is limited by a temperature-sensitive device, or is influenced by the temperature at which a change of state occurs, the ambient temperature is, in case of doubt, maintained at (23 ± 2) °C or (t_a ± 2) °C for **transformers** with t_a marking.*

Documents
Document Sharing Hub

Full document details: IEC 61558-2-9 2024 EXV

*The tests are carried out with the **transformer**, or any movable part of it, placed in the most unfavourable position that may occur in normal use.*

5.5 *For AC, test voltages are of substantially sinusoidal wave form, and, if not otherwise specified, have a frequency of 50 Hz or 60 Hz.*

5.6 ***Transformers** designed for more than one **rated supply voltage**, for a **rated supply voltage range** or for more than one **rated supply frequency**, are tested, unless otherwise specified in this document, at the supply voltage or supply frequency that results in the most severe test conditions for the **transformer**.*

5.7 *As far as possible, measurements are made with instruments which do not appreciably affect the values to be measured; if necessary, corrections shall be made.*

5.8 *Unless otherwise specified, **transformers** intended to be used with **external flexible cable or cords** are tested with a cord(s) (see 3.2.1) connected to the **transformer**.*

5.9 *If **class I transformers** have accessible conductive parts which are not connected to a protective earthing terminal or protective earthing contact, and are not separated from **hazardous-live-parts** by an **intermediate conductive part** that is connected to a protective earthing terminal or protective earthing contact, such parts are checked for compliance with the appropriate requirements specified for **class II transformers** in this document.*

5.10 *A **flush-type transformer** is tested with an appropriate flush-mount box of insulating material. This box is placed in an **enclosure** as indicated in Figure 2, made from plywood, with a thickness of 20 mm, the inside painted dull black, and the distance between the back of the mounting box and the rear wall of the **enclosure** being 5 mm.*

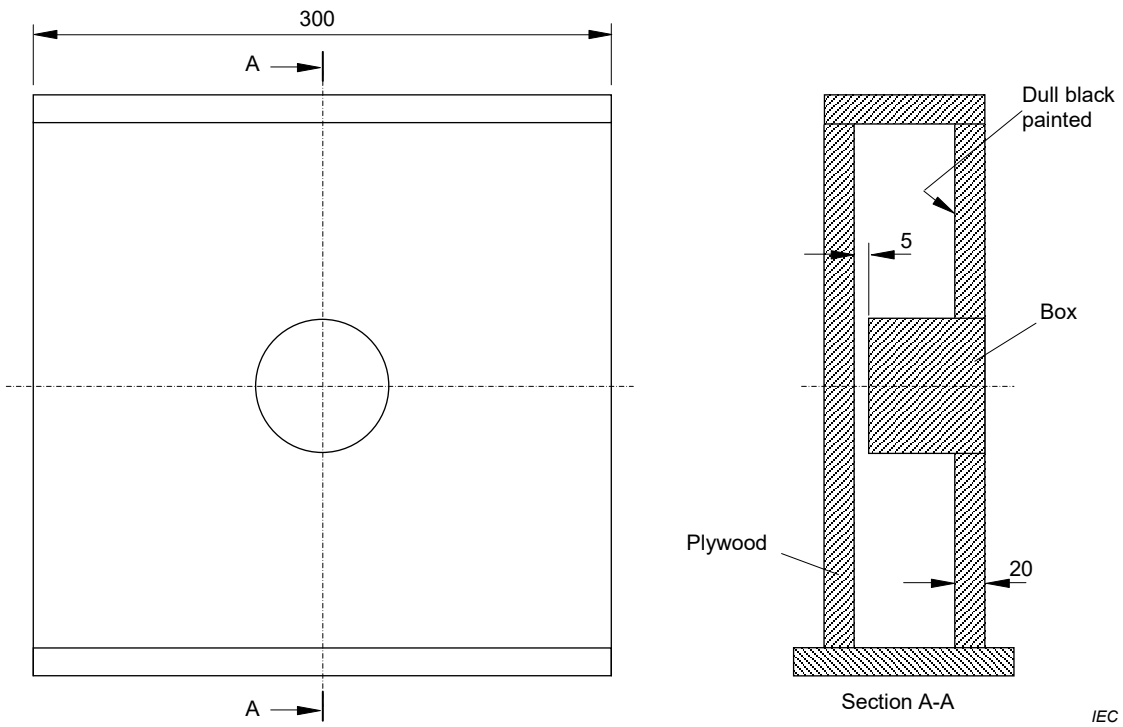

Figure 2 – Mounting box for flush-type transformer

5.11 ***Transformers for specific use** for which there are no relevant appliance or equipment standards are tested as **transformers** for general use, their rating being considered as the power consumption and power factor of the appliance(s) or equipment for which they are designed.*

AVA Documents
Document Sharing Hub
Full document details: IEC 61558-2-9 2024 EXV

5.12 Void

5.13 *IP00* ***transformers*** *with unknown end application, are tested without adding an* ***enclosure****.*

For these ***transformers****, the requirements of Clause 9 are not applicable. Furthermore, the test in 27.2 is not performed as the result can be influenced by the* ***enclosure*** *in the final application, for example on the fixing point of the* ***transformer*** *fixed on plastic support. For the fault condition test, if applicable, the product standard for the final product applies.*

5.14 *IP00* ***transformers****, with known end application, are mounted and tested in accordance with the manufacturer's instructions.*

5.15 *The tests in Clauses 18 and 26 are based on an elevation of 2 000 m above sea level. If tested in elevations in excess of 2 000 m above sea level, Annex A of IEC 60664-1:2007 applies.*

6 Ratings

Ratings are indicated in the relevant part of IEC 61558-2 for different types of **transformers.**

6.101 The **rated output voltage** shall not exceed 50 V AC or 120 V ripple-free DC.

For **independent transformers**, this **output voltage** limitation applies even when **output windings**, not intended for interconnection, are connected in series.

6.102 The **rated output** shall not exceed 10 kVA.

6.103 The **rated supply frequency** and the **internal operating frequencies** shall not exceed 500 Hz.

6.104 The **rated supply voltage** shall not exceed 1 000 V AC.

Compliance with the requirements of 6.101 to 6.104 is checked by inspection of the marking.

7 Classification

7.1 Transformers are classified according to their protection against electric shock:

– **class I transformers;**
– **class II transformers;**
– **class III transformers.**

NOTE **Incorporated transformers** are not classified; their degree of protection against electric shock is determined by the way in which the **transformer** is incorporated.

7.2 According to short-circuit characteristic or protection against abnormal use:

– **inherently short-circuit proof transformers**;
– **non-inherently short-circuit proof transformers.**

7.3 According to their degree of protection ensured by the **enclosure**.

– **portable transformers** shall have a degree of protection of at least IP24.

Documents
Document Sharing Hub
Full document details: IEC 61558-2-9 2024 EXV

7.4 Transformers are classified according to their mobility:

– **stationary transformers;**
– **fixed transformers;**
– **portable transformers;**
– **hand-held transformers.**

7.5 According to their **duty-type**:

– **continuous operation.**

7.6 Transformers are classified according to the intended use:

7.6.1 Associated

– **incorporated;**
– **for specific use.**

7.6.2 Independent

7.7 Transformers are classified according to the environmental conditions where they are intended to be used:

– normal environment;
– special environments (e.g. arctic).

7.8 According to their transient overvoltage condition:

– **overvoltage category II.**

8 Marking and other information

8.1 **Transformers** shall be marked with the following (for symbols see Table 1):

a) rated supply voltage(s) or the rated supply voltage range(s) in volts;

Transformers having a range of rated values and able to operate without adjustment throughout the range shall be marked with the lower and the upper limits of the range separated by a hyphen.

NOTE 1 Example 115 V – 230 V: the **transformer** is suitable for any value between 115 V and 230 V.

Transformers having different rated values, and which have to be adjusted for use at a particular value by the user or installer, shall be marked with the different values separated by an oblique stroke.

NOTE 2 Example 1: 115 V / 230 V: the **transformer** is only suitable for 115 V or 230 V (e.g. a **transformer** with a selector switch or different sets of terminals).

NOTE 3 Example 2: 230 V/400 V: The **transformer** is only suitable for 230 V or 400 V where 230 V is for single-phase operation and 400 V for three-phase operation (e.g., a **transformer** with terminals for both supplies).

b) **rated output voltage**(s) in volts or kilovolts;

For **transformers** incorporating a rectifier, the **rated output voltage** after the rectifier shall be marked with the arithmetic mean value, or the output voltage before the rectifier shall be expressed as RMS value.

NOTE 4 The RMS value is distinguished from an arithmetic mean value by the use of RMS in the marking.

c) **rated output** in volt-amperes or kilovolt-amperes and volt-amperes reactive or kilovolt-amperes reactive for reactors;

Documents
Document Sharing Hub
Full document details: IEC 61558-2-9 2024 EXV

NOTE 5 For **transformers** incorporating a rectifier, the **rated output** can be expressed in watts, instead of volt-amperes or kilovolt-amperes.

d) **rated output current**(s) in amperes or milliamperes as an alternative to the marking of the **rated output**;

e) rated supply frequency(ies) in hertz;

f) **rated power factor**, if other than unity, for **transformers** rated above 25 VA;

g) symbol or abbreviation AC for alternating current or DC for direct current output;

h) relevant graphical symbols shown in Table 101 that indicate the kind of **transformer**; if an IP00 **transformer** or and **associated transformers** have circuits corresponding to different parts 2 in the same construction (e.g. **SELV output circuit** according to IEC 61558-2-6 and 230 V **output circuit** according to IEC 61558-2-4) the relevant symbols have to be used;

i) name or trade mark of the manufacturer or responsible vendor;

j) model or type reference;

k) vector group in accordance with IEC 60076-1 (for three-phase **transformers** if required);

l) symbol for **class II** construction, for **class II transformers** only;

symbol for **class III** construction, for **class III transformers** only;

m) indication of the protection index IP, if other than IP00;

n) rated maximum ambient temperature t_a, if other than 25 °C;

It is recommended that the values of t_a are given in steps of 5 °C for $t_a \leq 50$ °C and in steps of 10 °C for $t_a > 50$ °C;

o) **rated minimum ambient temperature** t_{amin}, if lower than +10 °C and if a temperature sensitive device is used;

It is recommended that the values of t_{amin} are given in steps of 5 °C.

p) duty cycle, if any**,** unless the operating time is limited by the construction of the **transformer** or corresponds to the operating conditions specified in the relevant part of IEC 61558-2. The marking of **short-time duty cycle** or **intermittent duty cycle** shall correspond to normal use. The operating time for **transformers** with short-time duty shall be expressed in seconds (s) or minutes (min); the operating time and the resting time of **transformers** with intermittent duty cycle shall be expressed in seconds (s) or minutes (min), separated by an oblique stroke;

q) symbol for overvoltage category, if other than OVC II;

r) **transformers** to be used with forced air cooling where the fan is not a part of the **transformer** shall be marked with “AF” followed by the air speed, expressed in m/s;

s) in addition, the manufacturer shall be prepared to provide the purchaser with the following information (in the literature or otherwise):

– for **stationary transformers** with a **rated output** exceeding 1 000 VA, the **short-circuit voltage** expressed as a percentage of the **rated supply voltage**;

– the electrical function of the **transformer**.

NOTE 6 If the **transformer** has more than one output winding, the short-circuit voltage to be marked is the lowest value for the various windings.

Additional markings are allowed provided they do not give rise to misunderstanding.

All markings except those under i) and j) may be illustrated as QR Code according ISO/IEC 18004.

t) symbol indicating the maximum altitude of installation, if higher than 2 000 m.

8.2 **Transformers** with protection index IP00, or **associated transformers**, may be marked with only the name (or trade mark) of the manufacturer or responsible vendor and the type reference (or catalogue reference). Other characteristics shall then be provided in the data sheets of the **transformer** or in the manufacturer's instruction sheet.

AVA Documents
Document Sharing Hub

Full document details: IEC 61558-2-9 2024 EXV

The name of the manufacturer or responsible vendor and the type reference may be replaced by a traceable code.

This information shall enable replacement of the original **transformer** with an equivalent **transformer**.

NOTE Equivalent implies electrically, mechanically, dimensionally and functionally interchangeable.

8.3 If the **transformer** can be adjusted for different **rated supply voltages**, the adjusted voltage shall be easily and clearly discernible.

8.4 **Transformers** with tapped or multiple **output windings** shall be marked with:

– the **rated output voltage** for each tapping or winding, unless the **transformer** is intended for special purposes involving frequent changes in output voltage;
– the **rated output** for each tapping or winding; if the **rated output** for all tapings or windings is the same, at least one tapping or winding shall be marked.

The arrangement of the connections necessary to obtain the various output voltages shall be clearly indicated on the **transformer**.

8.5 **Non-inherently short-circuit proof transformers** with incorporated fuses and **non-short-circuit proof transformers** designed to be protected by fuses shall, in addition, be marked with the rated current (amperes or milliamperes) of the protecting fuse-link, followed or preceded by the symbol for the time current characteristics of the fuses in accordance with the relevant publication, if applicable.

Non-inherently short-circuit proof transformers with incorporated replaceable protective devices other than fuses, and **non-short-circuit proof transformers** designed to be protected with protective devices other than fuses shall, in addition, be marked with the manufacturer's model or type reference of the protective device, and/or the ratings of the protective device.

NOTE 1 In addition, a symbol in accordance with Annex V can be used.

NOTE 2 **Non-inherently short-circuit proof transformers** with non-replaceable protective devices need no additional marking regarding the protective device.

The marking shall contain sufficient information to ensure proper replacement of the protective device.

When replaceable protective devices other than fuses are used, appropriate information about their replacement shall be provided in an instruction sheet, or the equivalent, accompanying the **transformer**.

8.6 Terminals intended exclusively for the neutral conductor shall be identified by the symbol for neutral.

Protective earthing terminals shall be identified by the symbol for protective earthing.

Terminals of **input** and **output windings** shall be clearly identified.

If any point of a winding or a terminal is connected to the frame or core, it shall be marked with the relevant symbol.

8.7 **Transformer** shall be provided with markings clearly indicating the manner in which the **transformer** is to be connected, unless it is evident from the design of the **transformer**.

Documents
Document Sharing Hub
Full document details: IEC 61558-2-9 2024 EXV

8.8 For **transformers** with type **X**, **Y** and **Z attachments**, the instruction sheet shall contain the following information or the equivalent:

– for **type X attachments** having a specially prepared cord:

  "If the **external flexible cable or cord** of this **transformer** is damaged, it shall be replaced by a special cord or assembly available from the manufacturer or their service agent";

– for **type Y attachments**:

  "If the **external flexible cable or cord** of this **transformer** is damaged, it shall be replaced by the manufacturer or their service agent or a similarly qualified person in order to avoid a hazard";

– for **type Z attachments**:

  "The **external flexible cable or cord** of this **transformer** cannot be replaced; if the cord is damaged, the **transformer** shall be scrapped".

8.9 **Transformers** for indoor use only shall be marked with the relevant symbol.

8.10 **Class II transformers** shall be marked with the graphical symbol IEC 60417-5172:2003-02 placed adjacent to the supply information (e.g. on the rating plate), such that it is obvious the symbol is part of the technical information and can in no way be confused with the manufacturer's name or any other identification (see 7.4.4 of IEC 61140:2016).

Class II transformers with parts to be mounted shall be delivered with all parts that make them class II after mounting according to the mounting instructions of the manufacturer and shall be marked with the class II symbol. Moreover, if the **transformer** can be mounted without the covers (e.g. on a distribution box), the marking for class II shall be placed on a part that effectively provides the class II characteristics (e.g., on a cover for terminals to connect to the supply).

8.11 When symbols are used on equipment or in instructions, they shall be as follows:

Documents
Document Sharing Hub
Full document details: IEC 61558-2-9 2024 EXV

Table 1 – Symbols used on equipment or in instructions

Symbol or graphical symbol	Explanation or title	Identification
V [a]	Volts	
A [a]	Amperes	
VA or (VAR) [a]	Volt amperes (or volt-amperes reactive for reactors)	
W [a]	Watts	
Hz [a]	Hertz	
PRI	Input	
SEC	Output	
⎓	Direct current	IEC 60417-5031:2002-10
N	Neutral	
∼	Alternating current	IEC 60417-5032:2002-10
3∼	Three-phase alternating current	IEC 60417-5032-1:2002-10
3N∼	Three-phase alternating current with neutral conductor	IEC 60417-5032-2:2002-10
cos φ	Power factor	
⧈	Class II equipment	IEC 60417-5172:2003-02
III	Class III equipment	IEC 60417-5180:2003-02
I	Equipment of overvoltage category I	IEC 60417-6348:2015-10
II	Equipment of overvoltage category II	IEC 60417-6349:2015-10
III	Equipment of overvoltage category III	IEC 60417-6350:2015-10
IV	Equipment of overvoltage category IV	IEC 60417-6351:2015-10
⊟	Fuse (add symbol for time-current characteristics)	IEC 60417-5016:2002-10
t_a	Rated maximum ambient temperature Maximum temperature at which the **transformer** may be operated continuously under normal conditions of use	
t_{amin}	Rated minimum ambient temperature Minimum temperature at which the transformer may be operated continuously under normal conditions of use	
t_{min}	Rated minimum temperature Minimum temperature for transportation and storage	
⏚	Frame or chassis (or core terminal)	IEC 60417-5020:2002-10
⏚	Protective earth (ground)	IEC 60417-5019:2006-08

AVA Documents
Document Sharing Hub
Full document details: IEC 61558-2-9 2024 EXV

Symbol or graphical symbol	Explanation or title	Identification
IPXX	IP number [b]	
	Earth (ground or functional earth)	IEC 60417-5017:2006-08
	indoor use only	IEC 60417-5957:2004-12
≤3000m	To indicate that the appliance is intended to be usable up to the maximum altitude 3 000 m. The letter symbols "3 000" may be replaced by those for a different numerical value (in metres) in agreement with actual applications. The recommended value should be either 2 000, 3 000, 4 000, or 5 000 (metres).	IEC 60417-6343:2015-06
	To indicate that the power supply unit shall not be used, if pins of the plug part are damaged. NOTE See 8.8, attachment type C	IEC 60417-6352:2015-10

[a] Multiple or submultiples are allowed (e.g. kV, mA...).

[b] The X used in the IP number in this scheme indicates a missing numeral in the example, but both of the appropriate numerals shall be marked on the **transformer**, if applicable. Additional and supplementary letters mentioned in IEC 60529 may be used if necessary.

The symbol for linear **power supply units** shall be used in conjunction with the symbol indicating the kind of **transformer**.

Table 101 – Symbols indicating the kind of transformer

Symbol or graphical symbol	Explanation or title	Identification
	Short-circuit proof transformer for class III handlamps (inherently or **non-inherently)**	IEC 60417-5953:2002-10
	Power supply unit, linear	IEC 60417-6210:2013-10

8.12 The different positions of regulating devices and the different positions of switches shall be indicated by numbers, letters or other visual means.

If numbers are used for indicating the different positions, the "off" position shall be indicated by the number 0 and the position for a greater output, input, etc. shall be indicated by a higher number.

The number 0 shall not be used for any other indication. Indications used shall be comprehensible without the knowledge of languages, national standards, etc.

Documents
Document Sharing Hub
Full document details: IEC 61558-2-9 2024 EXV

8.13 Marking shall not be placed on screws or other easily removable parts.

Marking shall, with the exceptions mentioned below, be clearly discernible when the **transformer** is ready for use.

Marking related to the terminals shall be so positioned that it is clearly discernible, if necessary after removal of the cover; it shall be such that there can be no confusion between input terminals and output terminals.

Marking related to the interchangeable protective devices shall be positioned adjacent to the bases of these devices, and shall be clearly discernible after removal of any cover and the protective device.

8.14 Visible information (symbols) shall be provided, when it is necessary to take special precautions for installation, transportation or use (in the catalogue, data sheet, instruction sheet or packaging):

– **non-inherently short-circuit proof transformer with non-self-resetting or non-replaceable protective device** and non-replaceable **intentional weak parts** shall have an information explaining the protective devices cannot be resetted or replaced after a short-circuit or an overload;
– for **transformers** generating a **protective earthing conductor current** greater than 10 mA and are intended for permanent connection, the **protective earthing conductor current** shall be clearly stated in the instruction and indication shall be given that the installation shall be made according to the wiring rules;
– for **stationary transformers** with a **rated output** exceeding 1 000 VA, the short-circuit voltage expressed as a percentage of the rated supply voltage;
– the electrical function of the **transformer**;
– the limiting temperature of the winding under abnormal conditions which shall be respected when the **transformer** is built into an appliance as information for appliance design;
– for **transformers** not designed for series and/or parallel connection with more than one output winding, that the **transformer** is not intended for series/parallel connection.

Compliance with the requirements of 8.1 to 8.14 is checked by inspection.

For IP00 **transformers**, if applicable, the test in 27.2 is not performed as the result may be affected by the **enclosure** in the final application.

8.15 Marking shall be durable and easily legible.

Compliance is checked by inspection and by rubbing the marking by hand for 15 s with a piece of cotton cloth soaked with water and again for 15 s with a piece of cotton cloth soaked with petroleum spirit.

The petroleum spirit to be used for the test is aliphatic solvent hexane with an aromatic content of 0,1 % maximum, by volume, a kauributanol value of 29, initial boiling point approximately 65 °C, dry point approximately 69 °C and specific gravity of 0,68 g/cm^3.

Marking made by moulding, pressing or engraving is not subjected to this test.

After all the tests of this document, the marking shall be easily legible, it shall not be possible to remove labels easily, and they shall show no curling.

Documents
Document Sharing Hub
Full document details: IEC 61558-2-9 2024 EXV

8.16 Portable transformers with integrated plugs complying with EN 50075 (IEC plug type C), shall use the symbol IEC 60417-6352:2015-10.

The instruction sheet of the plug in transformer shall contain the following information, or equivalent:

if the pins of the plug parts are damaged, the plug-in power supply shall be scrapped.

NOTE The countries using this type of plug are mentioned under world plugs type C (available at http://www.iec.ch/worldplugs/typeC.htm).

Compliance with the requirements is checked by inspection.

8.101

For **transformers** intended for connection to the supply by means of a cable or cord and a plug, an instruction sheet or the equivalent shall be delivered with the **transformer**, drawing the attention of the user to the fact that the **output circuit(s)** shall be protected in accordance with national wiring rules.

9 Protection against electric shock

9.1 General

Transformers shall be enclosed and provided with adequate protection against contact with **hazardous-live-parts** and shall have no risk of an electric shock from stored charge on capacitors.

Compliance is checked by inspection and by the tests of 9.2.1, 9.2.2 and 9.3.

9.2 Protection against contact with hazardous-live-parts

9.2.1 Determination of hazardous-live-parts

9.2.1.1 A **live part** is not a **hazardous-live-part** if it is separated from the supply by **double** or **reinforced insulation** and the requirements of 9.2.1.2 or 9.2.1.3 are met when **the transformer** is supplied at **rated supply voltage**.

9.2.1.2 The voltage shall not exceed 35 V AC peak or 60 V ripple free DC.

Compliance is checked by measurements carried out between any two conductive parts.

9.2.1.3 Where the voltage exceeds 35 V (peak) AC or 60 V ripple free DC, the touch-current shall not exceed:

- for AC: 0,7 mA (peak);
- for DC: 2,0 mA.

Compliance is checked by measuring the touch current as stated in Annex J.

*In addition, when a capacitor is connected to the **live parts**:*

9.2.1.3.1 The discharge shall not exceed 45 µC for stored voltages between 60 V and 15 kV, or

9.2.1.3.2 The energy of discharge shall not exceed 350 mJ for stored voltages exceeding 15 kV.

Documents
Document Sharing Hub
Full document details: IEC 61558-2-9 2024 EXV

Compliance of 9.2.1.3.1 and 9.2.1.3.2 is checked by measurements carried out with a load of 2 000 Ω.

9.2.2 Accessibility to hazardous-live-parts

Transformers shall be constructed to provide adequate protection against accessibility to **hazardous-live-parts**.

Class I and **II transformers** shall be so constructed and enclosed that there is adequate protection against accidental contact **with hazardous-live-parts**.

For **class I transformers**, accessible parts shall be separated from **hazardous-live-parts** by at least **basic insulation**.

Class II transformers shall be so constructed and enclosed that there is adequate protection against accessibility to **basic insulation** and to **conductive parts** separated from **hazardous-live-parts** by **basic insulation** only. Only parts separated from **hazardous-live-parts** by **double** or **reinforced insulation** may be accessible.

Hazardous-live-parts shall not be accessible after removal of detachable parts except for:

- lamps having caps larger than B9 and E10;
- type D fuse-holders.

IP00 **transformers** shall comply with the end product standard after incorporation in the end product.

The insulating properties of lacquer, enamel, paper, cotton, oxide film on conductive parts and sealing compound shall not be considered as giving the required protection against accidental contact with **hazardous-live-parts** with the exception of **fully insulated winding wire (FIW)**.

NOTE 1 Self-hardening resins can be relied upon to give the required protection against accidental contact with **hazardous-live-parts**.

Shafts, handles, operating levers, knobs and the like shall not be **hazardous-live-parts**.

Compliance is checked by inspection and by the relevant tests of IEC 60529.

*In addition, openings in **class II transformers**, and openings in **class I transformers** other than those in **conductive parts** connected to a protective earthing terminal, are tested with the test pin shown in Figure 3.*

Documents
Document Sharing Hub

Full document details: IEC 61558-2-9 2024 EXV

Dimensions in millimeters

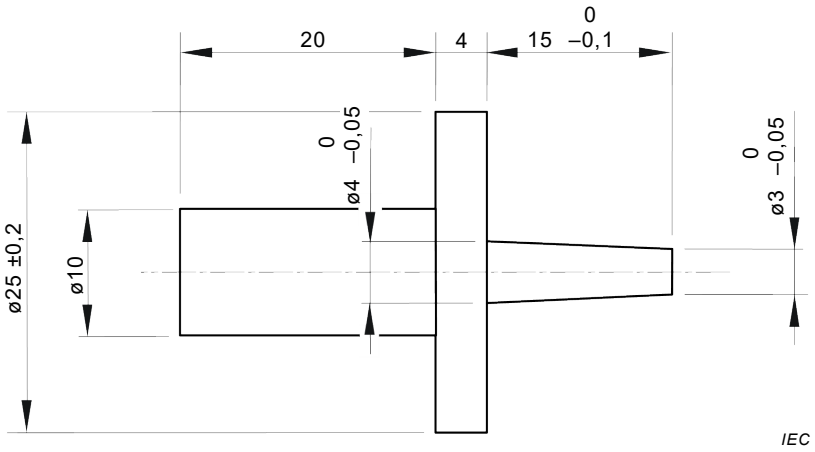

Figure 3 – Test pin (see IEC 61032, test probe 13)

The test finger and the test pin are applied, without appreciable force, in every possible position.

The test finger of Figure 4 is applied without appreciable force, the ***transformer*** *being in every possible position except that* ***transformers*** *normally used on the floor and having a mass exceeding 40 kg are not tilted. Through openings, the test finger is applied to any depth that the finger will permit and is rotated or angled before, during and after insertion to any position. If the opening does not allow the entry of the finger, the force on the finger in the straight position is increased to 20 N. If the finger then enters the opening, the test is repeated with the finger in the angled position.*

Documents
Document Sharing Hub
Full document details: IEC 61558-2-9 2024 EXV

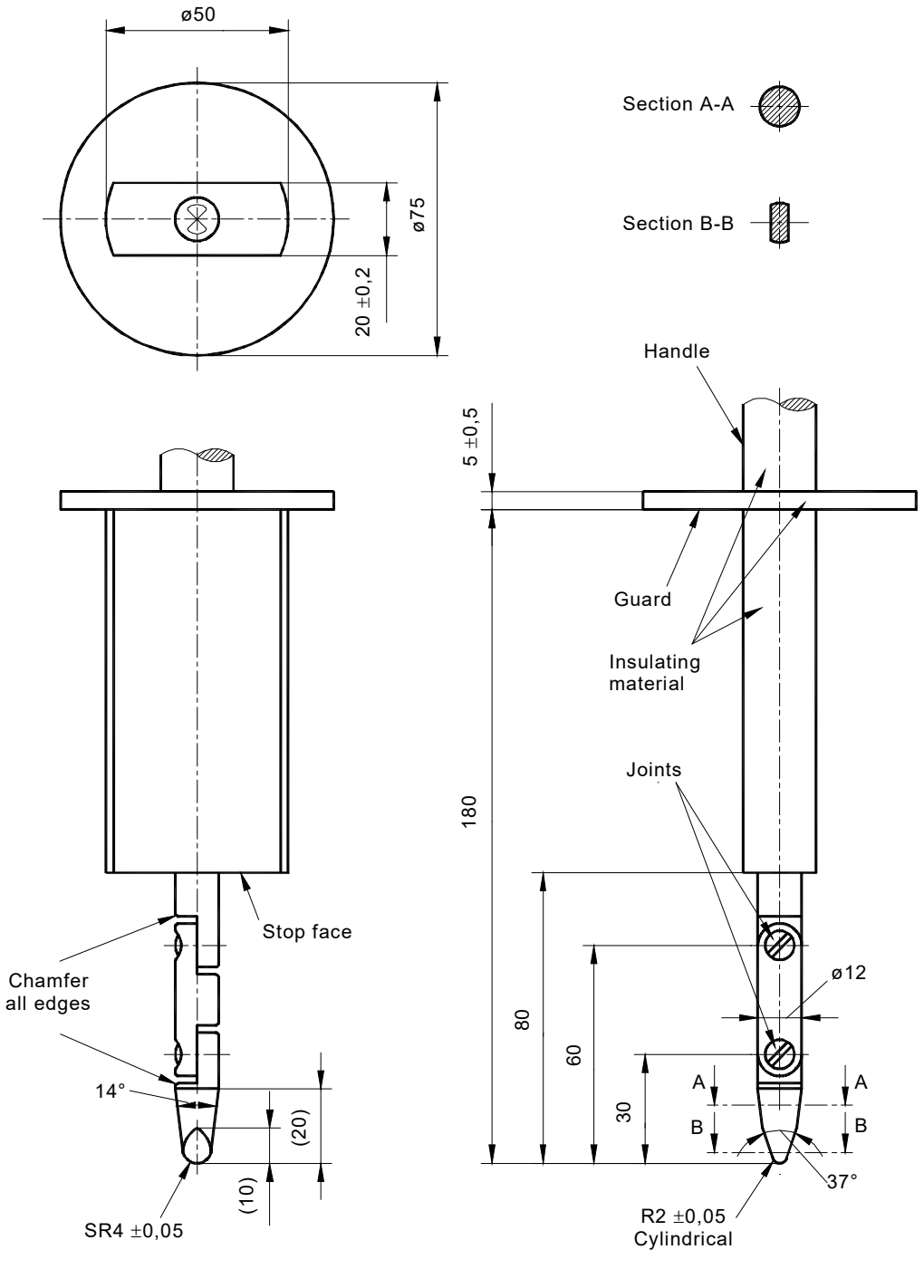

Material: metal, except where otherwise specified

Linear dimensions in millimetres

Tolerances on dimensions without specific tolerance:

on angles: 0/–10°

on linear dimensions:

– up to 25 mm: $^{0}_{-0,05}$

– over 25 mm: ± 0,2

Both joints shall permit movement in the same plane and the same direction through an angle of 90° with a 0° to +10° tolerance.

Figure 4 – Standard test finger (see IEC 61032, test probe B)

Documents
Document Sharing Hub
Full document details: IEC 61558-2-9 2024 EXV

*It shall not be possible to touch with the test finger bare **hazardous-live-parts** or **hazardous-live-parts** protected only by lacquer, enamel, paper, cotton, oxide film or sealing compound, with the exception of **fully insulated winding wire (FIW)**.*

*There shall be no possibility to touch conductive parts of **class II transformers** with the test finger, which are separated from **hazardous-live-parts** only by **basic insulation**.*

*Moreover it shall not be possible to touch bare **hazardous live parts** with the test pin.*

NOTE 2 This requirement does not apply to lamp caps or socket-outlets.

In case of doubt, an electrical contact indicator, with a voltage not less than 40 V, is used with a test pin.

9.2.3 Accessibility to non hazardous-live-part

Non **hazardous-live-parts** of the **output circuit** isolated from the **input circuit** by **double** or **reinforced insulation** may be accessible under the following conditions:

- for **no-load output voltages** not exceeding 35 V peak AC or 60 V ripple-free DC, both poles may be accessible;
- for **no-load output voltages** exceeding 35 V peak AC or 60 V ripple-free DC and not exceeding 250 V AC, only one of the poles may be accessible.

9.3 Protection against hazardous electrical discharge

For **transformers** with a primary supply plug, the pins of the plug shall not be hazardous-live measured 1 s after withdrawal of the plug.

For **transformers** without a primary supply plug, the terminals provided for connecting the **transformer** to the supply source shall not be hazardous-live measured 5 s after disconnection of the supply source.

NOTE For the purpose of this subclause, plug connectors and appliance inlets are regarded as mains plugs.

Compliance is checked by the following test:

If the nominal capacitance across the pins does not exceed 0,1 µF, no test is conducted.

*The primary supply switch of the **transformer**, if any, is in the off-position, unless it is more unfavourable in the on-position.*

The test shall be carried out 10 times or with a device used to switch off at the most unfavourable electrical angle of the supply voltage.

The voltage is measured between the input terminals or between the supply leads or between the pins of the supply plug used for the connection to the supply source after 1 s or 5 s.

If the voltage exceeds 60 V ripple free DC, the discharge is measured in the same conditions and shall not exceed 45 µC.

10 Change of input voltage setting

Transformers with more than one **rated supply voltage** shall be so constructed that the voltage setting cannot be changed without the aid of a **tool**.

NOTE As an example, the requirement concerning the voltage setting is met if a **tool** is needed to remove a cover before the voltage setting can be changed.

AVA Documents
Document Sharing Hub

Full document details: IEC 61558-2-9 2024 EXV