IEC 61587-6

Edition 2.0 2021-04

INTERNATIONAL STANDARD

NORME INTERNATIONALE

colour inside

Mechanical structures for electrical and electronic equipment – Tests for IEC 60917 and IEC 60297 series – Part 6: Security aspects for indoor cabinets

Structures mécaniques pour équipements électriques et électroniques – Essais pour les séries IEC 60917 et IEC 60297 – Partie 6: Aspects liés à la sécurité des baies intérieures

IEC 61587-6:2021-04(en-fr)

Documents
Document Sharing Hub

Full document details: IEC 61587-6-2021

THIS PUBLICATION IS COPYRIGHT PROTECTED
Copyright © 2021 IEC, Geneva, Switzerland

All rights reserved. Unless otherwise specified, no part of this publication may be reproduced or utilized in any form or by any means, electronic or mechanical, including photocopying and microfilm, without permission in writing from either IEC or IEC's member National Committee in the country of the requester. If you have any questions about IEC copyright or have an enquiry about obtaining additional rights to this publication, please contact the address below or your local IEC member National Committee for further information.

Droits de reproduction réservés. Sauf indication contraire, aucune partie de cette publication ne peut être reproduite ni utilisée sous quelque forme que ce soit et par aucun procédé, électronique ou mécanique, y compris la photocopie et les microfilms, sans l'accord écrit de l'IEC ou du Comité national de l'IEC du pays du demandeur. Si vous avez des questions sur le copyright de l'IEC ou si vous désirez obtenir des droits supplémentaires sur cette publication, utilisez les coordonnées ci-après ou contactez le Comité national de l'IEC de votre pays de résidence.

IEC Central Office
3, rue de Varembé
CH-1211 Geneva 20
Switzerland

Tel.: +41 22 919 02 11
info@iec.ch
www.iec.ch

About the IEC
The International Electrotechnical Commission (IEC) is the leading global organization that prepares and publishes International Standards for all electrical, electronic and related technologies.

About IEC publications
The technical content of IEC publications is kept under constant review by the IEC. Please make sure that you have the latest edition, a corrigendum or an amendment might have been published.

IEC publications search - webstore.iec.ch/advsearchform
The advanced search enables to find IEC publications by a variety of criteria (reference number, text, technical committee, …). It also gives information on projects, replaced and withdrawn publications.

IEC Just Published - webstore.iec.ch/justpublished
Stay up to date on all new IEC publications. Just Published details all new publications released. Available online and once a month by email.

IEC Customer Service Centre - webstore.iec.ch/csc
If you wish to give us your feedback on this publication or need further assistance, please contact the Customer Service Centre: sales@iec.ch.

IEC online collection - oc.iec.ch
Discover our powerful search engine and read freely all the publications previews. With a subscription you will always have access to up to date content tailored to your needs.

Electropedia - www.electropedia.org
The world's leading online dictionary on electrotechnology, containing more than 22 000 terminological entries in English and French, with equivalent terms in 18 additional languages. Also known as the International Electrotechnical Vocabulary (IEV) online.

A propos de l'IEC
La Commission Electrotechnique Internationale (IEC) est la première organisation mondiale qui élabore et publie des Normes internationales pour tout ce qui a trait à l'électricité, à l'électronique et aux technologies apparentées.

A propos des publications IEC
Le contenu technique des publications IEC est constamment revu. Veuillez vous assurer que vous possédez l'édition la plus récente, un corrigendum ou amendement peut avoir été publié.

Recherche de publications IEC - webstore.iec.ch/advsearchform
La recherche avancée permet de trouver des publications IEC en utilisant différents critères (numéro de référence, texte, comité d'études, …). Elle donne aussi des informations sur les projets et les publications remplacées ou retirées.

IEC Just Published - webstore.iec.ch/justpublished
Restez informé sur les nouvelles publications IEC. Just Published détaille les nouvelles publications parues. Disponible en ligne et une fois par mois par email.

Service Clients - webstore.iec.ch/csc
Si vous désirez nous donner des commentaires sur cette publication ou si vous avez des questions contactez-nous: sales@iec.ch.

IEC online collection - oc.iec.ch
Découvrez notre puissant moteur de recherche et consultez gratuitement tous les aperçus des publications. Avec un abonnement, vous aurez toujours accès à un contenu à jour adapté à vos besoins.

Electropedia - www.electropedia.org
Le premier dictionnaire d'électrotechnologie en ligne au monde, avec plus de 22 000 articles terminologiques en anglais et en français, ainsi que les termes équivalents dans 16 langues additionnelles. Egalement appelé Vocabulaire Electrotechnique International (IEV) en ligne.

Documents
Document Sharing Hub

Full document details: IEC 61587-6-2021

IEC 61587-6

Edition 2.0 2021-04

INTERNATIONAL STANDARD

NORME INTERNATIONALE

colour inside

Mechanical structures for electrical and electronic equipment – Tests for IEC 60917 and IEC 60297 series – Part 6: Security aspects for indoor cabinets

Structures mécaniques pour équipements électriques et électroniques – Essais pour les séries IEC 60917 et IEC 60297 – Partie 6: Aspects liés à la sécurité des baies intérieures

INTERNATIONAL ELECTROTECHNICAL COMMISSION

COMMISSION ELECTROTECHNIQUE INTERNATIONALE

ICS 31.240

ISBN 978-2-8322-9607-3

Warning! Make sure that you obtained this publication from an authorized distributor.
Attention! Veuillez vous assurer que vous avez obtenu cette publication via un distributeur agréé.

AVA Documents
Document Sharing Hub

® Registered trademark of the International Electrotechnical Commission
Marque déposée de la Commission Electrotechnique Internationale

Full document details: IEC 61587-6-2021

CONTENTS

FOREWORD 3
INTRODUCTION 5
1 Scope 6
2 Normative references 6
3 Terms and definitions 6
4 Security aspects for indoor cabinets 8
4.1 General 8
4.2 Access security level of the cabinet 9
5 Security performance levels of cabinets 10
5.1 General 10
5.2 Security performance levels of cabinet – Mechanical 10
5.2.1 General 10
5.2.2 Tests for strength of mechanical locks and hinges 11
5.2.3 Tests for operation of handle and mechanical lock 12
5.2.4 Tests for panel strength 12
5.3 Key 13
5.4 Cabinet floor anchoring 14
Annex A (normative) Mechanical performance and test methods for handles – Mechanical strengths of levers of handles 15
A.1 General 15
A.2 Static loading test, push/pull performance 15
A.3 Static loading test, turn performance 16
Bibliography 18

Figure 1 – Typical mechanical components for security provision of the cabinet 8
Figure 2 – Concept of access protection within buildings or premises 9
Figure 3 – Static loading test for mechanical lock and hinges 11
Figure 4 – Static loading test for panel strength 13
Figure A.1 – Lever handles' push/pull performance 16
Figure A.2 – Lever handles' turn performance 17

Table 1 – Access security levels of indoor cabinet installation sites 9
Table 2 – Security performance levels of cabinets 10
Table 3 – Security performance levels of cabinet – Mechanical 10
Table 4 – Test procedures for operation of handle and mechanical lock 12
Table 5 – Security performance levels of key 14
Table 6 – Security performance level of cabinet floor anchoring 14

Documents
Document Sharing Hub
Full document details: IEC 61587-6-2021

INTERNATIONAL ELECTROTECHNICAL COMMISSION

MECHANICAL STRUCTURES FOR ELECTRICAL AND ELECTRONIC EQUIPMENT – TESTS FOR IEC 60917 AND IEC 60297 SERIES –

Part 6: Security aspects for indoor cabinets

FOREWORD

1) The International Electrotechnical Commission (IEC) is a worldwide organization for standardization comprising all national electrotechnical committees (IEC National Committees). The object of IEC is to promote international co-operation on all questions concerning standardization in the electrical and electronic fields. To this end and in addition to other activities, IEC publishes International Standards, Technical Specifications, Technical Reports, Publicly Available Specifications (PAS) and Guides (hereafter referred to as "IEC Publication(s)"). Their preparation is entrusted to technical committees; any IEC National Committee interested in the subject dealt with may participate in this preparatory work. International, governmental and non-governmental organizations liaising with the IEC also participate in this preparation. IEC collaborates closely with the International Organization for Standardization (ISO) in accordance with conditions determined by agreement between the two organizations.
2) The formal decisions or agreements of IEC on technical matters express, as nearly as possible, an international consensus of opinion on the relevant subjects since each technical committee has representation from all interested IEC National Committees.
3) IEC Publications have the form of recommendations for international use and are accepted by IEC National Committees in that sense. While all reasonable efforts are made to ensure that the technical content of IEC Publications is accurate, IEC cannot be held responsible for the way in which they are used or for any misinterpretation by any end user.
4) In order to promote international uniformity, IEC National Committees undertake to apply IEC Publications transparently to the maximum extent possible in their national and regional publications. Any divergence between any IEC Publication and the corresponding national or regional publication shall be clearly indicated in the latter.
5) IEC itself does not provide any attestation of conformity. Independent certification bodies provide conformity assessment services and, in some areas, access to IEC marks of conformity. IEC is not responsible for any services carried out by independent certification bodies.
6) All users should ensure that they have the latest edition of this publication.
7) No liability shall attach to IEC or its directors, employees, servants or agents including individual experts and members of its technical committees and IEC National Committees for any personal injury, property damage or other damage of any nature whatsoever, whether direct or indirect, or for costs (including legal fees) and expenses arising out of the publication, use of, or reliance upon, this IEC Publication or any other IEC Publications.
8) Attention is drawn to the Normative references cited in this publication. Use of the referenced publications is indispensable for the correct application of this publication.
9) Attention is drawn to the possibility that some of the elements of this IEC Publication may be the subject of patent rights. IEC shall not be held responsible for identifying any or all such patent rights.

International Standard IEC 61587-6 has been prepared by subcommittee 48D: Mechanical structures for electrical and electronic equipment, of IEC technical committee 48: Electrical connectors and mechanical structures for electrical and electronic equipment.

This second edition cancels and replaces the first edition published in 2017. This edition constitutes a technical revision.

This edition includes the following significant technical changes with respect to the previous edition:

a) Revised and expanded terms and definitions.
b) Additional information in 4.2 Access security level of the cabinet.
c) Revised requirements for Security performance levels of cabinets and added additional levels in Table 2 – Security performance levels of cabinets.

AVA Documents
Document Sharing Hub

Full document details: IEC 61587-6-2021

d) Added a column for panel strength in Table 3 – Security performance levels of cabinet – mechanical.

e) Revised test for mechanical lock (and hinges added) in 5.2.2 Tests for strength of mechanical locks and hinges.

f) Added 5.2.4 Tests for panel strength.

g) Added additional description of Key function in Table 5 – Security performance levels of key.

h) Revised test method for handles in Annex A.

The text of this International Standard is based on the following documents:

FDIS	Report on voting
48D/736/FDIS	48D/737/RVD

Full information on the voting for the approval of this International Standard can be found in the report on voting indicated in the above table.

This document has been drafted in accordance with the ISO/IEC Directives, Part 2.

A list of all parts in the IEC 61587 series, published under the general title *Mechanical structures for electrical and electronic equipment – Tests for IEC 60917 and IEC 60297 series*, can be found on the IEC website.

The committee has decided that the contents of this document will remain unchanged until the stability date indicated on the IEC website under "http://webstore.iec.ch" in the data related to the specific document. At this date, the document will be

- reconfirmed,
- withdrawn,
- replaced by a revised edition, or
- amended.

IMPORTANT – The "colour inside" logo on the cover page of this document indicates that it contains colours which are considered to be useful for the correct understanding of its contents. Users should therefore print this document using a colour printer.

Documents
Document Sharing Hub

Full document details: IEC 61587-6-2021

INTRODUCTION

The security of electrical and electronic equipment or systems currently applied in the fields of ICT (information and communication technology) and of industrial/infrastructure control systems, is of critical importance. The advent of 5G telecommunication service and edge computing/edge servers/edge switches places ICT equipment in industrial environments. This document defines performance levels for cabinets not only for ICT data centre and office locations but for any combination of equipment, purpose, and location.

In general, security is achieved by restrictions and protections against improper or unauthorized access from both the hardware and software sides of the systems.

The security of the hardware of electrical and electronic equipment or systems, which are housed in mechanical structures such as cabinets based on IEC 60297 series and IEC 60917 series, depends:

– on conditions of their installation sites,
– on the system hardware which provides access protection at the installation sites, and
– on the robustness of the mechanical structures and of their mechanical locks both at the access gates/doors of the installation sites and of the mechanical structures.

Therefore, a classification of the installation conditions and of the levels of security measures for the hardware is very important for design and practices of various electronic equipment or systems, which are used in the field of ICT, industrial control, transportation and others.

From this point of view, this document intends to clarify the relationship between the installation conditions and the security requirements for indoor cabinets, and to provide the required performance and test methods on mechanical components related with security provisions for indoor cabinets which are in accordance with the IEC 60297 series and IEC 60917 series.

Vandalism protection is typically controlled by user-specific requirements. Therefore, this document does not address vandalism.

Documents
Document Sharing Hub

Full document details: IEC 61587-6-2021

MECHANICAL STRUCTURES FOR ELECTRICAL AND ELECTRONIC EQUIPMENT – TESTS FOR IEC 60917 AND IEC 60297 SERIES –

Part 6: Security aspects for indoor cabinets

1 Scope

This part of IEC 61587 specifies security aspects and security performance levels of the mechanical construction of indoor cabinets in accordance with IEC 60917 (all parts) and IEC 60297 (all parts). This document does not address vandalism.

NOTE Protection against vandalism is typically controlled by user-specific requirements.

2 Normative references

The following documents are referred to in the text in such a way that some or all of their content constitutes requirements of this document. For dated references, only the edition cited applies. For undated references, the latest edition of the referenced document (including any amendments) applies.

IEC 60297 (all parts), *Mechanical structures for electrical and electronic equipment – Dimensions of mechanical structures of the 482,6 mm (19 in) series*

IEC 60529, *Degrees of protection provided by enclosures (IP Code)*

IEC 60917 (all parts), *Modular order for the development of mechanical structures for electronic equipment practices*

IEC 61587-1, *Mechanical structures for electronic equipment – Tests for IEC 60917 and IEC 60297 series – Part 1: Environmental requirements, test set-up and safety aspects for cabinets, racks, subracks and chassis under indoor condition use and transportation*

IEC 61587-2, *Mechanical structures for electronic equipment – Tests for IEC 60917 and IEC 60297 – Part 2: Seismic tests for cabinets and racks*

3 Terms and definitions

For the purposes of this document, the following terms and definitions apply.

ISO and IEC maintain terminological databases for use in standardization at the following addresses:

- IEC Electropedia: available at http://www.electropedia.org/
- ISO Online browsing platform: available at http://www.iso.org/obp

3.1
handle
<cabinet> mechanical component to open or close the door of a cabinet, equipped on the door of the cabinet

Documents
Document Sharing Hub

Full document details: IEC 61587-6-2021

3.2
key
<cabinet> device to allow only authorized access to a cabinet, assembled into the handle of the cabinet or on the door of the cabinet

3.3
mechanical lock
<cabinet> mechanical component assembled in the door of a cabinet that secures the door to the frame or other structural member of the cabinet and is operated by the handle

3.4
multipoint mechanical lock
<cabinet> system of more than one mechanical lock operated by a single handle

3.5
access security level
<cabinet> level of security against unauthorized access, determined by the security measures needed to obtain access to the cabinet

Note 1 to entry: The access security level of an indoor cabinet depends on the type of installation site (building) and on the cabinet's location in the building.

3.6
access protection
<cabinet> protection against unauthorized access to a cabinet

3.7
security performance
<cabinet> performance of the mechanical components of a cabinet to achieve the intended protection against unauthorized access

Note 1 to entry: The mechanical components of the cabinet are shown in Figure 1.

Documents
Document Sharing Hub

Full document details: IEC 61587-6-2021

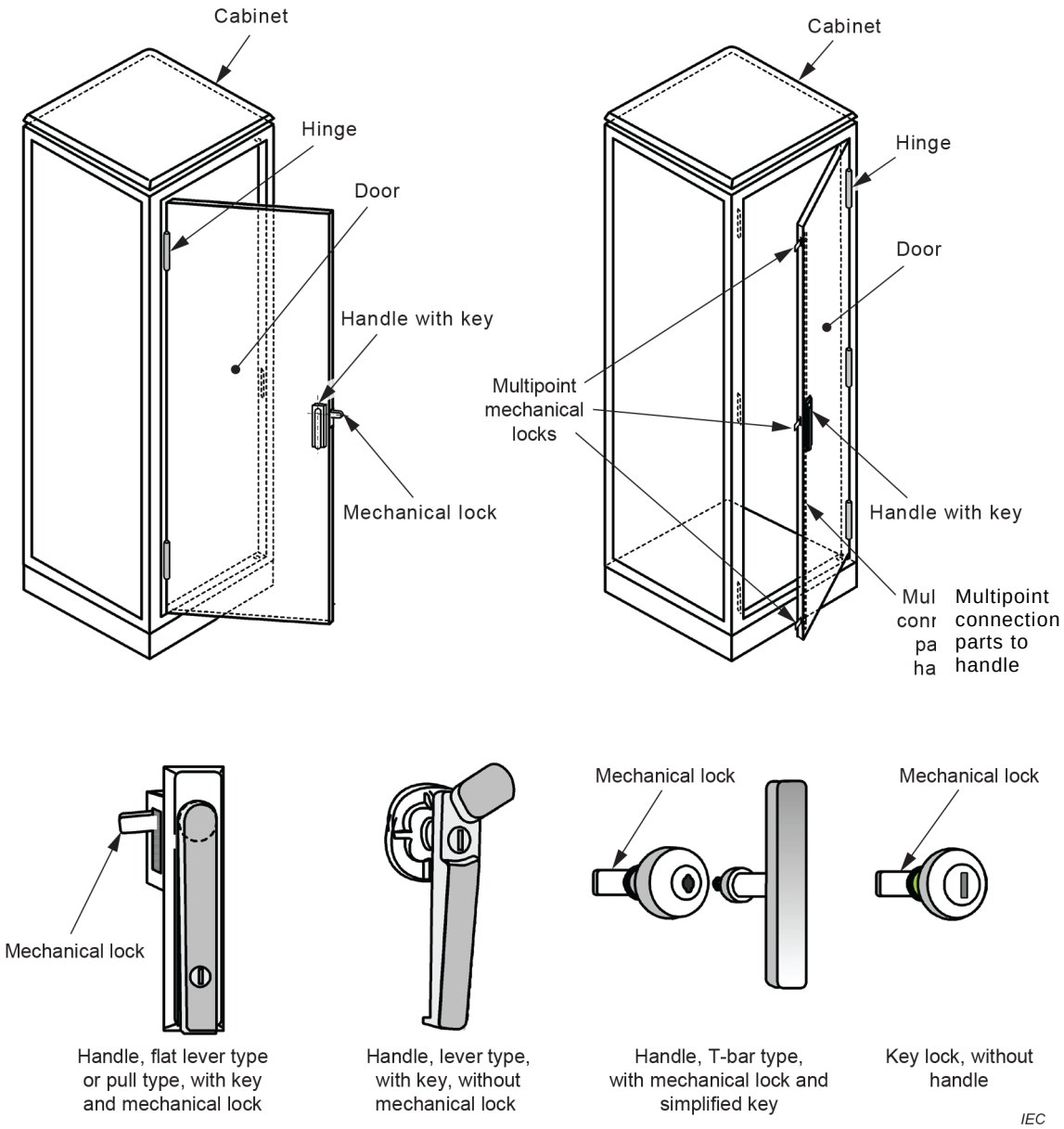

Figure 1 – Typical mechanical components for security provision of the cabinet

4 Security aspects for indoor cabinets

4.1 General

Security for electronic equipment should be designed from the point of view of both hardware and software. With respect to the security of hardware installed in a cabinet, the security aspects of the cabinet depend on the following factors:

a) access security level of the cabinet installation site (access security within the building);

b) security performance of the cabinet.

The access security within the building, as part of the physical security, is primarily aimed to be effective against unauthorized forced entry. In this regard, many international or regional regulations and specifications for building doors, gates, building door handles and key-locking systems and other building physical security facilities are defined.

Documents
Document Sharing Hub
Full document details: IEC 61587-6-2021

The security performance of the cabinet is determined by the choice of specific handle, key, mechanical lock and other components, which are different from the hardware for buildings and are mostly dedicated to cabinets for electrical and electronic systems.

Designers and users should consider those points properly to establish security aspects for the intended use of the relevant indoor cabinet.

4.2 Access security level of the cabinet

In the case of the indoor cabinet, the access security level depends on building level restrictions to reach the cabinet installation sites. Figure 2 and Table 1 show typical access security levels in buildings or premises.

Security performance for the intended use cabinet should be appropriate for the access security levels shown in Table 1. End users should use Table 1 to describe their installation location to cabinet providers.

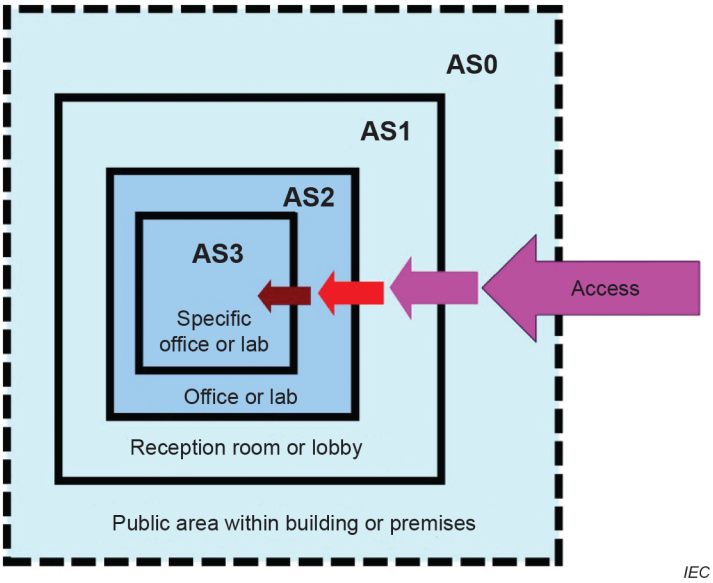

Figure 2 – Concept of access protection within buildings or premises

Table 1 – Access security levels of indoor cabinet installation sites

Access security level	Access protection	Example – office or laboratory	Example – data centre	Example – factory
AS0	No restriction to enter the site	Public areas in building or premises	Public areas in building or premises	Public areas in building or premises
AS1	Restricted area to enter or access monitored and controlled by a person or video surveillance	Reception rooms or lobby areas of offices or laboratories within buildings	Reception rooms or lobby areas of data centre	Reception rooms or lobby areas of factory, inside gate/fence
AS2	Severe restricted area to enter	Offices or laboratories	Server and networking area	Factory floor
AS3	Very severe restriction to enter the specific area.	Specific office or laboratories, or control rooms	Servers and network in caged area	Server and networking closets in factory

Documents
Document Sharing Hub
Full document details: IEC 61587-6-2021

5 Security performance levels of cabinets

5.1 General

Table 2 shows security performance levels of cabinets and related security performance levels of mechanical components.

Application of security performance levels of cabinets should be defined by the required security measures of the cabinet-mounted electronic system and the access security levels of the installation sites. Nevertheless, whatever the access security level of the installation site, the security level of the cabinet may be chosen independently with reference to requirements arising from the intended electronic system. Designers and users should study and clarify the actual conditions of the installation site and the required security measures of the intended electronic system, and apply the optimum security performance levels for cabinets.

Table 2 – Security performance levels of cabinets

Security performance levels of cabinets	Security performance levels of mechanical components			
	Security performance level of cabinet – Mechanical (See Table 3)	Key (See Table 5)	Floor anchoring (See Table 6)	Typical access security level
CS0	SH1	SK0/SK1	SA0/SA1/SA2	AS2, AS3
CS1		SK2		AS1
CS2		SK3		AS1, AS2
CS3		SK4		AS2, AS3
CS4	SH2	SK0/SK1		AS2
CS5		SK2		AS2
CS6		SK3		AS0, AS1
CS7		SK4		AS0, AS1

5.2 Security performance levels of cabinet – Mechanical

5.2.1 General

Table 3 shows security performance levels and required mechanical performances of the cabinet.

Table 3 – Security performance levels of cabinet – Mechanical

Security performance level of cabinet – Mechanical	Strength of mechanical locks and hinges Static loading test at door closed position	Operation of handle and mechanical lock Open/close cycles	Panel Strength	Environmental performances level			
				Climate conditions (IEC 61587-1)	Industrial atmosphere (IEC 61587-1)	Impact (IEC 61587-1)	IP (IEC 60529)
SH1	200 N	> 10 000	100 N	C1	A1	K1	IP20
SH2	400 N		200 N	C1/C2/C3	A1/A2/A3	K2/K3	IP20; IP30; IP42; IP54

AVA Documents Document Sharing Hub

5.2.2 Tests for strength of mechanical locks and hinges

Figure 3 shows the test method for assessing the strength of the mechanical locks and of the door hinges. Loads are applied from the inside of the cabinet door in the direction indicated. For further details on testing the strength of the handle as a stand-alone component see Annex A (normative).

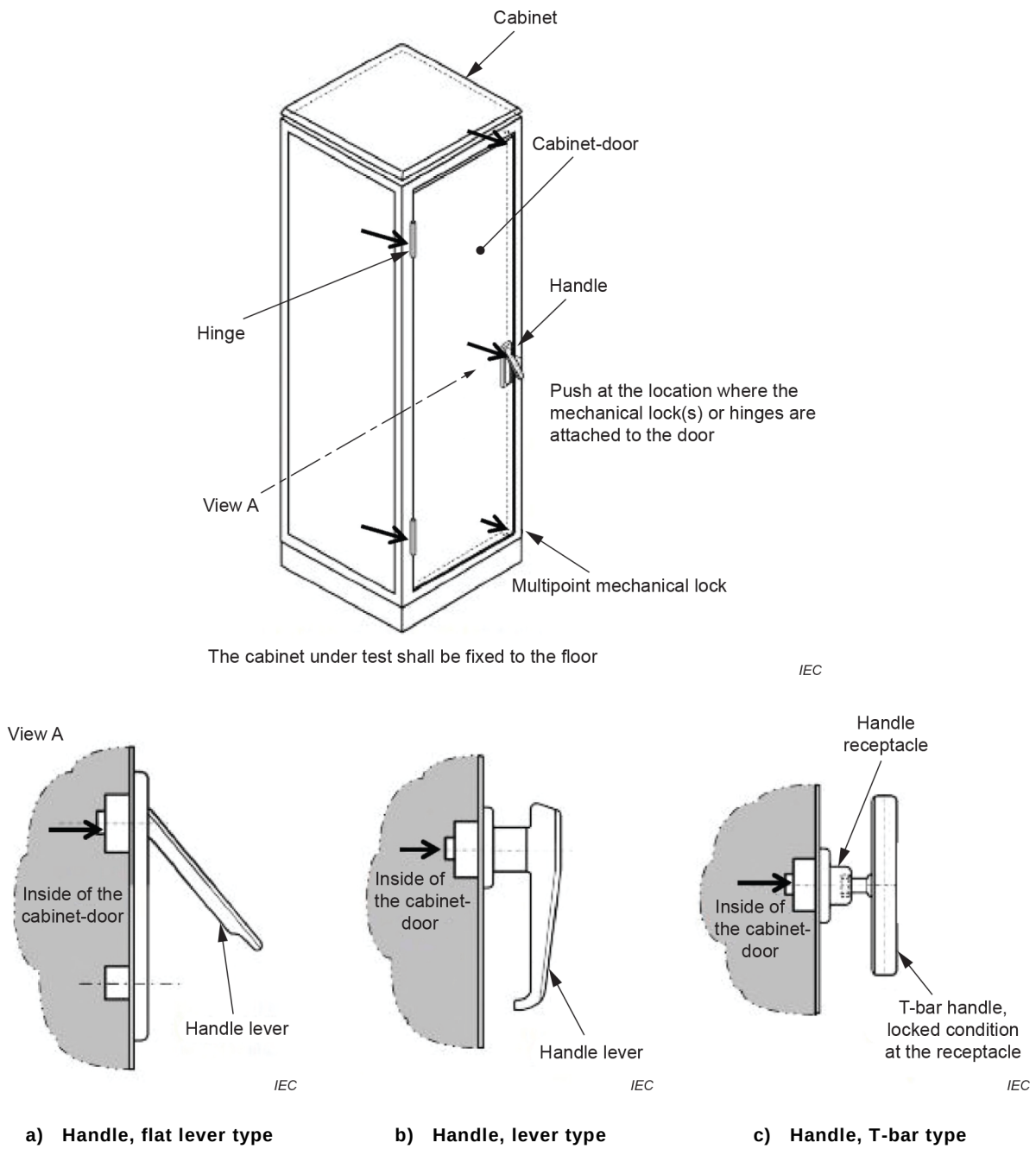

a) Handle, flat lever type **b) Handle, lever type** **c) Handle, T-bar type**

Figure 3 – Static loading test for mechanical lock and hinges

Criteria: After applying the static load (200 N or 400 N) 3 times, there shall be no deformation of any of the components of the handle, mechanical lock, hinges, door, or cabinet that affect form, fit, or function.

For multipoint mechanical locks each mechanical lock in the system is tested independently.

Documents
Document Sharing Hub
Full document details: IEC 61587-6-2021