IEC 61606-4

Edition 1.0 2005-12

INTERNATIONAL STANDARD

NORME INTERNATIONALE

Audio and audiovisual equipment – Digital audio parts – Basic measurement methods of audio characteristics – Part 4: Personal computer

Equipement audio et audiovisuel – Parties audio numériques – Méthodes de mesure de base des caractéristiques audio – Partie 4: Ordinateur personnel

IEC 61606-4:2005

Documents
Document Sharing Hub

Full document details: IEC 61606-4 2005

THIS PUBLICATION IS COPYRIGHT PROTECTED

Copyright © 2005 IEC, Geneva, Switzerland

All rights reserved. Unless otherwise specified, no part of this publication may be reproduced or utilized in any form or by any means, electronic or mechanical, including photocopying and microfilm, without permission in writing from either IEC or IEC's member National Committee in the country of the requester.
If you have any questions about IEC copyright or have an enquiry about obtaining additional rights to this publication, please contact the address below or your local IEC member National Committee for further information.

Droits de reproduction réservés. Sauf indication contraire, aucune partie de cette publication ne peut être reproduite ni utilisée sous quelque forme que ce soit et par aucun procédé, électronique ou mécanique, y compris la photocopie et les microfilms, sans l'accord écrit de la CEI ou du Comité national de la CEI du pays du demandeur.
Si vous avez des questions sur le copyright de la CEI ou si vous désirez obtenir des droits supplémentaires sur cette publication, utilisez les coordonnées ci-après ou contactez le Comité national de la CEI de votre pays de résidence.

IEC Central Office
3, rue de Varembé
CH-1211 Geneva 20
Switzerland

Tel.: +41 22 919 02 11
Fax: +41 22 919 03 00
info@iec.ch
www.iec.ch

About the IEC

The International Electrotechnical Commission (IEC) is the leading global organization that prepares and publishes International Standards for all electrical, electronic and related technologies.

About IEC publications

The technical content of IEC publications is kept under constant review by the IEC. Please make sure that you have the latest edition, a corrigenda or an amendment might have been published.

Useful links:

IEC publications search - www.iec.ch/searchpub

The advanced search enables you to find IEC publications by a variety of criteria (reference number, text, technical committee,…).
It also gives information on projects, replaced and withdrawn publications.

IEC Just Published - webstore.iec.ch/justpublished

Stay up to date on all new IEC publications. Just Published details all new publications released. Available on-line and also once a month by email.

Electropedia - www.electropedia.org

The world's leading online dictionary of electronic and electrical terms containing more than 30 000 terms and definitions in English and French, with equivalent terms in additional languages. Also known as the International Electrotechnical Vocabulary (IEV) on-line.

Customer Service Centre - webstore.iec.ch/csc

If you wish to give us your feedback on this publication or need further assistance, please contact the Customer Service Centre: csc@iec.ch.

A propos de la CEI

La Commission Electrotechnique Internationale (CEI) est la première organisation mondiale qui élabore et publie des Normes internationales pour tout ce qui a trait à l'électricité, à l'électronique et aux technologies apparentées.

A propos des publications CEI

Le contenu technique des publications de la CEI est constamment revu. Veuillez vous assurer que vous possédez l'édition la plus récente, un corrigendum ou amendement peut avoir été publié.

Liens utiles:

Recherche de publications CEI - www.iec.ch/searchpub

La recherche avancée vous permet de trouver des publications CEI en utilisant différents critères (numéro de référence, texte, comité d'études,…).
Elle donne aussi des informations sur les projets et les publications remplacées ou retirées.

Just Published CEI - webstore.iec.ch/justpublished

Restez informé sur les nouvelles publications de la CEI. Just Published détaille les nouvelles publications parues. Disponible en ligne et aussi une fois par mois par email.

Electropedia - www.electropedia.org

Le premier dictionnaire en ligne au monde de termes électroniques et électriques. Il contient plus de 30 000 termes et définitions en anglais et en français, ainsi que les termes équivalents dans les langues additionnelles. Egalement appelé Vocabulaire Electrotechnique International (VEI) en ligne.

Service Clients - webstore.iec.ch/csc

Si vous désirez nous donner des commentaires sur cette publication ou si vous avez des questions contactez-nous: csc@iec.ch.

Documents
Document Sharing Hub

Full document details: IEC 61606-4 2005

IEC 61606-4

Edition 1.0 2005-12

INTERNATIONAL STANDARD

NORME INTERNATIONALE

Audio and audiovisual equipment – Digital audio parts – Basic measurement methods of audio characteristics – Part 4: Personal computer

Equipement audio et audiovisuel – Parties audio numériques – Méthodes de mesure de base des caractéristiques audio – Partie 4: Ordinateur personnel

INTERNATIONAL
ELECTROTECHNICAL
COMMISSION

COMMISSION
ELECTROTECHNIQUE
INTERNATIONALE

PRICE CODE
CODE PRIX V

ICS 35.020; 33.160.30

ISBN 978-2-88912-903-4

Warning! Make sure that you obtained this publication from an authorized distributor.
Attention! Veuillez vous assurer que vous avez obtenu cette publication via un distributeur agréé.

AVA Documents
Document Sharing Hub

® Registered trademark of the International Electrotechnical Commission
Marque déposée de la Commission Electrotechnique Internationale

Full document details: IEC 61606-4 2005

CONTENTS

FOREWORD 4

1 Scope 6
2 Normative references 6
3 Terms, definitions and abbreviated terms 6
3.1 Terms and definitions 6
3.2 Abbreviated terms 8
3.3 Rated values 8
4 Measuring conditions 8
4.1 Environmental conditions 8
4.2 Power supplies 8
4.3 Test signal frequencies 9
4.4 Standard setting 10
4.5 Working setting 11
4.6 Preconditioning 12
5 Measuring instruments 12
5.1 Analogue signal generator 12
5.2 Analogue in-band level meter 12
5.3 Analogue low-pass filter 12
5.4 Analogue weighting filter 12
5.5 Standard medium 12
5.6 Recording medium 13
5.7 Software for digital data evaluation 13
5.8 Short-term distortion meter 14
5.9 Other instruments 14
6 Methods of measurement (digital-in/analogue-out) 14
6.1 Input/output characteristics 15
6.2 Frequency response 16
6.3 Noise characteristics 17
6.4 Distortion characteristics 21
7 Methods of measurement (analogue-in/digital-out) 23
7.1 Input/output characteristics 23
7.2 Frequency response 25
7.3 Noise characteristics 26
7.4 Distortion characteristics 29

Figure 1 – Block diagram for maximum output amplitude measurement 15
Figure 2 – Block diagram for gain difference between channels measurement 16
Figure 3 – Block diagram for frequency-response measurement 16
Figure 4 – Block diagram for signal-to-noise ratio measurement 17
Figure 5 – Block diagram for dynamic range measurement 18
Figure 6 – Block diagram for channel separation measurement 20
Figure 7 – Block diagram for distortion and noise measurement 21
Figure 8 – Block diagram for short-term distortion measurement 22
Figure 9 – Block diagram for maximum allowable input amplitude measurement 23

Documents
Document Sharing Hub

Full document details: IEC 61606-4 2005

Figure 10 – Block diagram for gain difference between channel and tracking error measurement 24
Figure 11 – Block diagram for frequency response measurement 25
Figure 12 – Block diagram for signal-to-noise ratio measurement 26
Figure 13 – Block diagram for dynamic range measurement 27
Figure 14 – Block diagram for channel separation measurement 28
Figure 15 – Block diagram for distortion and noise measurement 29
Figure 16 – Block diagram for short-term distortion measurement 30

Table 1 – Frequencies used in the measurement 9

Documents
Document Sharing Hub

Full document details: IEC 61606-4 2005

INTERNATIONAL ELECTROTECHNICAL COMMISSION

AUDIO AND AUDIOVISUAL EQUIPMENT – DIGITAL AUDIO PARTS – BASIC MEASUREMENT METHODS OF AUDIO CHARACTERISTICS –

Part 4: Personal computer

FOREWORD

1) The International Electrotechnical Commission (IEC) is a worldwide organization for standardization comprising all national electrotechnical committees (IEC National Committees). The object of IEC is to promote international co-operation on all questions concerning standardization in the electrical and electronic fields. To this end and in addition to other activities, IEC publishes International Standards, Technical Specifications, Technical Reports, Publicly Available Specifications (PAS) and Guides (hereafter referred to as "IEC Publication(s)"). Their preparation is entrusted to technical committees; any IEC National Committee interested in the subject dealt with may participate in this preparatory work. International, governmental and non-governmental organizations liaising with the IEC also participate in this preparation. IEC collaborates closely with the International Organization for Standardization (ISO) in accordance with conditions determined by agreement between the two organizations.
2) The formal decisions or agreements of IEC on technical matters express, as nearly as possible, an international consensus of opinion on the relevant subjects since each technical committee has representation from all interested IEC National Committees.
3) IEC Publications have the form of recommendations for international use and are accepted by IEC National Committees in that sense. While all reasonable efforts are made to ensure that the technical content of IEC Publications is accurate, IEC cannot be held responsible for the way in which they are used or for any misinterpretation by any end user.
4) In order to promote international uniformity, IEC National Committees undertake to apply IEC Publications transparently to the maximum extent possible in their national and regional publications. Any divergence between any IEC Publication and the corresponding national or regional publication shall be clearly indicated in the latter.
5) IEC provides no marking procedure to indicate its approval and cannot be rendered responsible for any equipment declared to be in conformity with an IEC Publication.
6) All users should ensure that they have the latest edition of this publication.
7) No liability shall attach to IEC or its directors, employees, servants or agents including individual experts and members of its technical committees and IEC National Committees for any personal injury, property damage or other damage of any nature whatsoever, whether direct or indirect, or for costs (including legal fees) and expenses arising out of the publication, use of, or reliance upon, this IEC Publication or any other IEC Publications.
8) Attention is drawn to the Normative references cited in this publication. Use of the referenced publications is indispensable for the correct application of this publication.
9) Attention is drawn to the possibility that some of the elements of this IEC Publication may be the subject of patent rights. IEC shall not be held responsible for identifying any or all such patent rights.

International Standard IEC 61606-4 has been prepared by IEC technical committee 100: Audio, video and multimedia equipment and systems.

This bilingual version (2012-05) corresponds to the monolingual English version, published in 2005-12.

The text of this standard is based on the following documents:

CDV	Report on voting
100/952/CDV	100/1030/RVC

Full information on the voting for the approval of this standard can be found in the report on voting indicated in the above table.

Documents
Document Sharing Hub

Full document details: IEC 61606-4 2005

The French version of this standard has not been voted upon.

This publication has been drafted in accordance with the ISO/IEC Directives, Part 2.

IEC 61606 consists of the following parts under the general title *Audio and audiovisual equipment – Digital audio parts – Basic measurement methods of audio characteristics:*

Part 1: General

Part 2: Consumer use

Part 3: Professional use[1]

Part 4: Personal computer

The committee has decided that the contents of this publication will remain unchanged until the maintenance result date indicated on the IEC web site under "http://webstore.iec.ch" in the data related to the specific publication. At this date, the publication will be

- reconfirmed;
- withdrawn;
- replaced by a revised edition, or
- amended.

[1] Under consideration.

Documents
Document Sharing Hub

Full document details: IEC 61606-4 2005

AUDIO AND AUDIOVISUAL EQUIPMENT – DIGITAL AUDIO PARTS – BASIC MEASUREMENT METHODS OF AUDIO CHARACTERISTICS –

Part 4: Personal computer

1 Scope

This part of IEC 61606 specifies the basic measurement methods of a linear PCM signal for an audio part of personal computers (PCs) and applies to both desktop and portable computers. The common measuring conditions and methods are described in IEC 61606-1. Specific conditions and methods of measurement for PCs are given in this standard.

NOTE 1 The methods described are mostly based on sampling frequencies from 8 kHz to 192 kHz and bit length from 8 bit to 24 bit.

NOTE 2 This standard describes tests for equipment which has digital input with analogue output and analogue input with digital output. Digital input data are provided from an internal HDD or other memory media and output digital data are recorded to an internal HDD or main memories.

NOTE 3 The methods specified in this standard are not applicable to systems incorporating bit-rate reduced digital audio signals that have data loss or to 1-bit signals. This part does not apply to analogue input with analogue output and digital input with digital output as described in IEC 61606-1.

NOTE 4 When a CPU in a PC is overloaded by tasks other than those for audio input/output, the PC may fail to record/reproduce the whole audio data. This standard applies only to the measurement in which input/output data are recorded/reproduced without such missing data. The performance of a PC with missing audio data may be evaluated by the short-term distortion measurement although such evaluation is not within the scope of this standard.

2 Normative references

The following referenced documents are indispensable for the application of this document. For dated references, only the edition cited applies. For undated references, the latest edition of the referenced document (including any amendments) applies.

IEC 60038, *IEC standard voltages*

IEC 60268-2, *Sound system equipment – Part 2: Explanation of general terms and calculation methods*

IEC 61606-1, *Audio and audiovisual equipment – Digital audio parts – Basic measurement methods of audio characteristics – Part 1: General*

IEC 61606-2, *Audio and audiovisual equipment – Digital audio parts – Basic measurement methods of audio characteristics – Part 2: Consumer use*

IEC 61672-1, *Electroacoustics – Sound level meters – Part 1: Specifications*

3 Terms, definitions and abbreviated terms

3.1 Terms and definitions

For the purposes of this document, the terms and definitions given in IEC 61606-1, as well as the following, apply.

AVA Documents Document Sharing Hub

Full document details: IEC 61606-4 2005

3.1.1
personal computer
PC
personal computer which is designed to be used by one person at a time

NOTE 1 A PC does not include optional sound cards or any board or drive installed by the user after purchase.

NOTE 2 A PC may be used by more than one person when it is used with network computers.

3.1.2
standard input signal amplitude
input analogue signal amplitude which corresponds to the digital **full-scale level**:

– analogue input terminal: 2 V r.m.s.
– microphone terminal: 100 mV r.m.s.

3.1.3
standard output signal amplitude
output analogue signal amplitude which corresponds to the digital **full-scale level**:

– analogue output terminal: 2 V r.m.s.

NOTE If the **EUT** cannot output the amplitude of 2 V r.m.s., 1 V r.m.s. may be used for the measurement. In that case, measured data should be indicated with the measured voltage.

– headphone terminal: maximum output amplitude

3.1.4
normal measuring amplitude
analogue signal amplitude equal to 1/10 of the **standard input signal amplitude**

3.1.5
normal source impedance
impedance which is connected to the analogue input terminals of the **EUT**:

– analogue input terminal: 2,2 kΩ
– microphone terminal: 600 Ω

3.1.6
normal load impedance
load impedance which is connected to the output terminals of the **EUT**:

– load of analogue output terminal: 22 kΩ
– load of headphone terminal: 32 Ω
– load of speaker terminals: 8 Ω or equal to the impedance of internal speakers

3.1.7
factory setting
default setting of **EUT** as defined by the manufacturer

3.1.8
standard medium
internal storage medium which provides digital test data at the standard setting and should be a hard disk drive (HDD) working on the **EUT**

NOTE If the **EUT** is not equipped with a HDD, another memory medium which is used as a main memory may be used. In this case, it should be stated with the results.

3.1.9
recording medium
internal data storage medium on which audio playback data are recorded for the analogue-in/digital-out measurement and should be a hard disk drive (HDD)

NOTE If the **EUT** is not equipped with a HDD, another memory medium which is used as a main memory may be used.

AVA Documents
Document Sharing Hub

Full document details: IEC 61606-4 2005

3.1.10
working medium
internal storage medium from which digital test data are provided at the working setting

NOTE This medium should be a main data source when audio signal is played on the **EUT**, such as a compact disc (CD).

3.2 Abbreviated terms

EUT	equipment under test, which is a PC in this standard
AC	alternating current
r.m.s.	root-mean square
LPCM	linear pulse code modulation
LSB	least significant bit

3.3 Rated values

For a full explanation of these terms, see IEC 60268-2. The following are rated conditions for digital audio equipment which should be specified by the manufacturer:

- rated supply voltage;
- rated supply frequency;
- rated digital input **word length**;
- rated **sampling frequency**(ies).

4 Measuring conditions

4.1 Environmental conditions

The following environmental conditions with the indicated tolerances shall be used:

– air pressure: 96 kPa ± 10 kPa
– ambient temperature: 15 °C to 35 °C
– relative humidity: (60 ± 15) %

4.2 Power supplies

An a.c. power supply or a battery shall be used. If a battery is used, it should be stated with the results.

4.2.1 Supply voltage

Rated a.c. power supply voltage, as specified in IEC 60038, shall be used. The tolerance of the supply voltage should be ±10 % or less.

4.2.2 Frequency(ies)

AC power supply frequency(ies) specified by the manufacturer shall be used. The tolerance of the frequency should be +2 %, –4 % or less.

4.2.3 Noises at the power supply output

Noises at the power supply output should be less than the amplitude which affects the result of measurement.

AVA Documents
Document Sharing Hub
Full document details: IEC 61606-4 2005

4.2.4 Battery

Only the battery designed for the **EUT** or built in the **EUT** shall be used.

4.3 Test signal frequencies

The frequency of the test signal shall be selected from the values in Table 1. In catalogues and other documents, where precision is not required or implied in the description, it is permitted to use the nominal values shown in this table. Unless otherwise specified, the reference frequency for measurements shall be 997 Hz, which may be stated in non-critical contexts, as 1 kHz.

Table 1 – Frequencies used in the measurement

Dimensions in Hz

Nominal frequency	Actual frequency									
	f_s= 8 000	f_s= 11 025	f_s= 16 000	f_s= 22 050	f_s= 32 000	f_s= 44 100	f_s= 48 000	f_s= 88 200	f_s= 96 000	f_s= 192 000
4	4	4	4	4	4	4	4	4	4	4
8	7	7	7	7	7	7	7	7	7	7
16	17	17	17	17	17	17	17	17	17	17
32	31	31	31	31	31	31	31	31	31	31
63	61	61	61	61	61	61	61	61	61	61
125	127	127	127	127	127	127	127	127	127	127
250	251	251	251	251	251	251	251	251	251	251
500	499	499	499	499	499	499	499	499	499	499
1 000	997	997	997	997	997	997	997	997	997	997
2 000	1 999	1 999	1 999	1 999	1 999	1 999	1 999	1 999	1 999	1 999
3 700	3 677	–	–	–	–	–	–	–	–	–
4 000	–	4 001	4 001	4 001	4 001	4 001	4 001	4 001	4 001	4 001
5 100	–	5059	5059	–	–	–	–	–	–	–
7 400	–	–	7 351	–	–	–	–	–	–	–
8 000	–	–	–	7 993	7 993	7 993	7 993	7 993	7 993	7 993
10 000	–	–	–	–	10 007	10 007	10 007	10 007	10 007	10 007
10 100	–	–	–	10 141	–	–	–	–	–	–
12 500	–	–	–	–	12 503	12 503	12 503	–	–	–
14 700	–	–	–	–	14 717	14 717	14 717	–	–	–
16 000	–	–	–	–	–	16 001	16 001	16 001	16 001	16 001
18 000	–	–	–	–	–	17 987	17 987	–	–	–
20 000	–	–	–	–	–	–	19 997	19 997	19 997	19 997
20 300	–	–	–	–	–	20 269	–	–	–	–
22 000	–	–	–	–	–	–	22 079	–	–	–
30 000	–	–	–	–	–	–	–	29 989	29 989	–
35 000	–	–	–	–	–	–	–	34 981	34 981	–
40 000	–	–	–	–	–	–	–	40 429	40 429	40 429
44 000	–	–	–	–	–	–	–	–	44 159	–
50 000	–	–	–	–	–	–	–	–	–	49 999
70 000	–	–	–	–	–	–	–	–	–	70 001
80 000	–	–	–	–	–	–	–	–	–	79 999
88 000	–	–	–	–	–	–	–	–	–	88 301

If a sweep signal is used in the measurement, the sweep frequency range is from 16 Hz to 1/2 × f_s.

AVA Documents
Document Sharing Hub

Full document details: IEC 61606-4 2005

4.4 Standard setting

4.4.1 Standard input condition for the EUT

4.4.1.1 Analogue signal input condition

4.4.1.1.1 Microphone Input

Signal amplitude: **normal measuring amplitude**

Source impedance: **normal source impedance**

4.4.1.1.2 Analogue Input

Signal amplitude: **normal measuring amplitude**

Source impedance: **normal source impedance**

4.4.1.2 Digital signal Input condition

The test digital signal shall be recorded on the **standard medium**.

Input signal level: **normal measuring level**

4.4.2 Standard output condition for the EUT

4.4.2.1 Analogue output condition

4.4.2.1.1 Voltage output and headphone output condition

Signal amplitude: 1/10 of **standard output signal amplitude**

Load impedance: **normal load impedance**

4.4.2.1.2 Power output condition

Signal amplitude: 1/10 of **maximum output amplitude**

Load impedance: **normal load impedance**

4.4.2.2 Digital output condition

The digital signal that is obtained from an analogue input signal shall be recorded on the **recording medium**.

Output signal level: –20 dB_{FS}

4.4.3 Hardware condition

4.4.3.1 Standard medium setting

To prepare the measurement, test signals shall be recorded on the **standard medium**. These recorded signals are used for an input test signal.

The signal format and accuracies are specified in 4.6.1 of IEC 61606-1.

4.4.3.2 Other hardware settings

All settings shall be set according to the **factory setting** except for the settings, such as hardware volume control, necessary for certain specific measurements.

Documents
Document Sharing Hub

Full document details: IEC 61606-4 2005

4.4.4 Software condition

4.4.4.1 Audio playback and recording software

A **factory setting** software should be used for audio reproduction and recording.

4.4.4.2 Display setting

All settings shall be set according to the **factory setting**.

Contents displayed on the screen shall be limited to those which are necessary for the measurement, and other contents (for example, a background picture or video) should not be displayed.

4.4.4.3 Other software

It is not necessary to activate any other software except for **factory setting** software if this exists.

4.4.5 Setting of level controls

4.4.5.1 Analogue-in/digital-out case

4.4.5.1.1 Analogue level control

The analogue level control shall be adjusted so that an input analogue signal of 997 Hz and the **normal measuring amplitude** is converted into a digital output level of –20 dB_{FS}. If the **EUT** is not equipped with an analogue level control, the measurement may be performed at the default gain.

4.4.5.1.2 Digital level control

Level controls provided in the digital domain shall be adjusted to 0 dB.

4.4.5.2 Digital-in/analogue-out case

4.4.5.2.1 Digital level control

Level controls provided in the digital domain shall be adjusted to 0 dB.

4.4.5.2.2 Analogue level control

The analogue level control shall be adjusted so that an input digital signal of 997 Hz and the **normal measuring level** is converted into the output of **normal measuring amplitude**. If the **EUT** is not equipped with any analogue level control, the measurement may be performed at the default gain.

4.5 Working setting

Digital test data shall be reproduced from the **working medium**.

NOTE This medium should be a main data source when audio signal is played on the **EUT** such as a CD drive.

4.5.1 Digital input condition

The test digital signal shall be recorded on the **working medium**.

4.5.2 Other conditions

Other conditions shall be the same as those for the standard setting.

Documents
Document Sharing Hub

Full document details: IEC 61606-4 2005

4.6 Preconditioning

The equipment shall be operated under normal operating conditions for the preconditioning period specified by the manufacturer prior to any measurements being performed. This condition is intended to allow the equipment to be stabilized. If the manufacturer specifies no preconditioning period, a period of 5 min shall be assumed. Should operational requirements preclude preconditioning, the manufacturer shall state so.

Should power supply to the equipment be interrupted during the measurement, sufficient preconditioning time shall be allowed to obtain the stabilized state again.

5 Measuring instruments

5.1 Analogue signal generator

As specified in 4.6.1.1.1 of IEC 61606-1.

5.2 Analogue in-band level meter

As specified in 4.6.3.2 of IEC 61606-1.

5.3 Analogue low-pass filter

As specified in 4.6.2.1 of IEC 61606-1.

In the case where f_s is lower than 40 kHz, the **upper band-edge frequency** should be 20 kHz.

5.4 Analogue weighting filter

The weighing filter used shall have A-weighing characteristics with tolerances class 1 as specified for sound level measurements in IEC 61672-1.

5.5 Standard medium

Refer to 3.1.8

Memory capacity: enough size to store the source data

5.5.1 Data format for digital test signal

The digital test data recorded on to the **standard medium** for the measurement are calculated from the ideal sine waveform as follows.

Data format:	**LPCM**
Word length:	from 8 bit to 24 bit
Signal level:	**digital zero**, –60 dB_{FS}, –30 dB_{FS}, –20 dB_{FS}, or **full-scale level**
Signal offset:	less than 1/2 LSB
Signal level accuracy:	error less than 1/2 LSB
Sampling frequency (f_s)	from 8 kHz to 192 kHz, depending on f_s in Table 1
Test frequency:	range from 4 Hz to 0,46 f_s Hz, depending on test frequency in Table 1
Frequency accuracy:	error less than 1 Hz/f_s

Documents
Document Sharing Hub

Full document details: IEC 61606-4 2005

5.6 Recording medium

Refer to 3.1.9.

Memory capacity: enough size to store the data to be measured.

5.7 Software for digital data evaluation

This software shall evaluate digital output data stored on the **recording medium** in the **EUT**. The software shall be installed in the **EUT**. When the recorded data on the **recording medium** is transmitted to an external instrument, the software for evaluation may be installed in the external instrument.

5.7.1 Narrow band-pass filter

5.7.1.1 Transmission characteristics

Stop band: attenuation: more than 60 dB at half and twice the measuring frequency.

5.7.1.2 Centre frequency of the filter

The centre frequencies of the narrow band-pass filter shall comply with the actual frequencies specified in 4.3 and used in the measurement (see Table 1).

5.7.1.3 Transmission distortion

The transmission distortion shall be less than the value which affects measurement values.

5.7.2 Digital weighting filter

The characteristics of weighing filter shall comply with A-weighing characteristics with tolerances class 1 as specified for sound level measurements in IEC 61672-1.

5.7.3 Level meter

A level meter shall be calibrated to indicate the r.m.s. signal level expressed in $dB_{\mathbf{FS}}$ and shall have the following characteristics:

frequency range: **in-band frequency range**

measuring range: **FS** to 1 LSB

accuracy: error not greater than 1 % of reading or 1/2 LSB

The r.m.s. signal level, V_{total}, shall be calculated from the digital data within the **in-band frequency range**. A method of calculation is shown in 4.6.1 of IEC 61606-2.

5.7.4 Digital distortion + noise (THD+N) meter

A digital distortion + noise (THD+N) meter shall have the capability equivalent to calculating the ratio of the total signal output to the noise and distortion components.

A measurement method is shown in 4.6.2 of IEC 61606-2.

AVA Documents
Document Sharing Hub

Full document details: IEC 61606-4 2005

5.8 Short-term distortion meter

5.8.1 Analogue-in/digital-out measurement

The short-term distortion meter calculates distortion and noise of digital input signal, consecutively every 50 ms for 15 s to produce 300 data.

The meter shall be equipped with the capability to measure distortion and noise with the same algorithm as defined in 4.6.2 of IEC 61606-2 except for the measurement time length. The second worse value of 300 calculated data, removing the worst, shall be adopted as the short-term distortion value of the measurement. This calculation may be made by software running on the **EUT**.

5.8.2 Digital-in/analogue-out measurement

The output analogue signal from **EUT** is fed into the short-term distortion meter and then converted to digital data.

The input analogue signal is converted to digital data and then recorded on a digital medium in the short-term distortion meter. The short-term distortion meter calculates distortion and noise in the same way as in the digital input case.

Input impedance:	**normal load impedance**
Maximum input amplitude:	greater than 4 V r.m.s.
Digital conversion accuracy:	smaller than 1/2 LSB of recording word length
Memory capacity:	larger than the volume required for a recording length of 15 s
Recording word length:	the same or longer **word length** of digital data into which the input analogue signal was converted.
Sampling frequency:	high enough to cover the **in-band frequency range**

5.9 Other instruments

The following instruments are defined in IEC 61606-1:

– digital waveform monitor

– analogue distortion meter

6 Methods of measurement (digital-in/analogue-out)

The methods of measurement described in the following subclauses apply to the equipment where the input signal is a digital audio signal and the output signal is an analogue signal. All the specifications described in IEC 61606-1, which correspond to this standard, are basically applied to these subclauses.

The following subclauses in this standard specify the details of measurement methods for audio parts in **PC**s.

When the **EUT** provides two or more channels, all channels should be measured in the same way. The **word length** and **sampling frequency** shall be stated in the expression of the results of the measurement.

Documents
Document Sharing Hub

Full document details: IEC 61606-4 2005

6.1 Input/output characteristics

6.1.1 Maximum output amplitude

6.1.1.1 Method of measurement

Connect the **EUT** and the measuring equipment as shown in Figure 1.

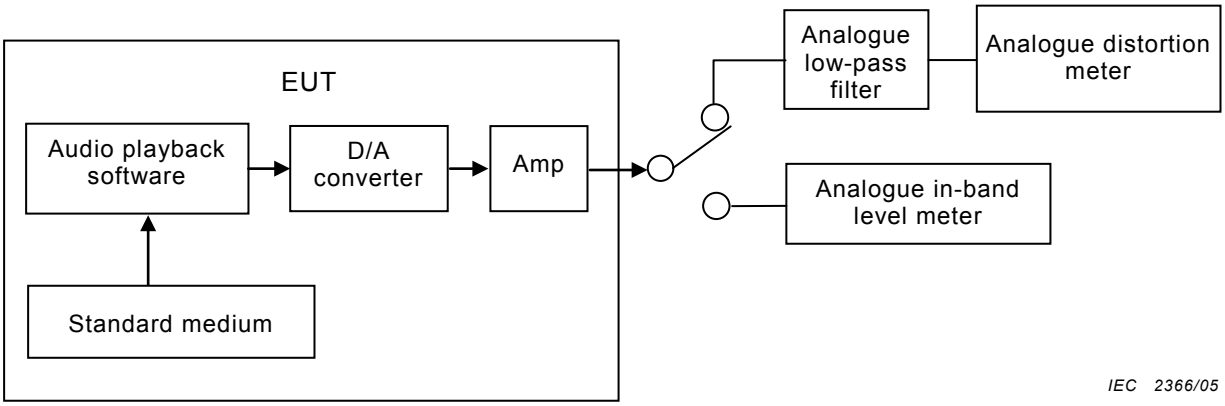

Figure 1 – Block diagram for maximum output amplitude measurement

6.1.1.2 Input signal

Frequency: 997 Hz

Signal level: **full-scale level**

6.1.1.3 Procedures

a) Set the **EUT** to the standard setting specified in 4.4.

b) Transfer the input digital signal data to the **standard medium**.

c) Playback the digital signal data from the **standard medium** by the audio playback software.

d) Adjust any analogue level controls and measure the maximum obtainable output amplitude for which the total distortion is less than 1 %.

In the case where no analogue level control is available, an available digital level control may be used.

6.1.1.4 Results of the measurement

The maximum output amplitude shall be expressed in V r.m.s.

6.1.2 Gain difference between channels

6.1.2.1 Method of measurement

Connect the **EUT** and the measuring equipment as shown in Figure 2.

Documents
Document Sharing Hub
Full document details: IEC 61606-4 2005

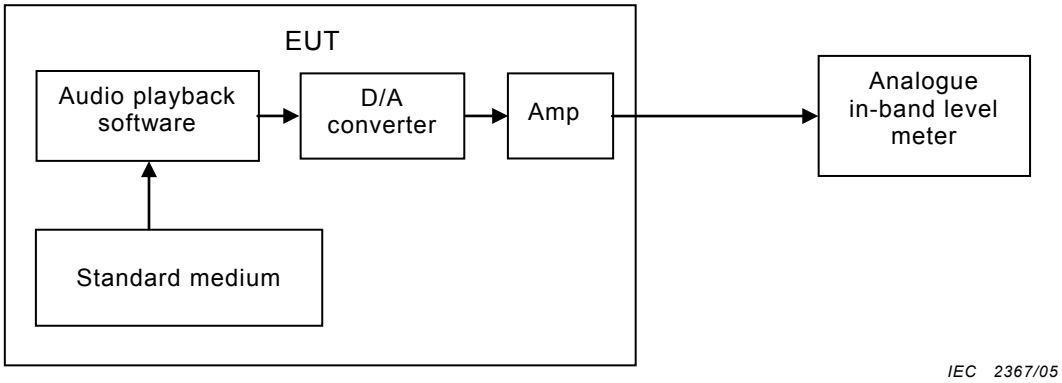

Figure 2 – Block diagram for gain difference between channels measurement

6.1.2.2 Input signal

Frequency: 997 Hz

Signal level: **normal measuring level** (–20 dB_{FS})

6.1.2.3 Procedure

a) Set the **EUT** to the standard setting specified in 4.4.

b) Transfer the input signal data to the **standard medium**.

c) Adjust any analogue level control to the maximum position.

d) Output the signal from the **EUT** to all the channels to be measured, either simultaneously or in turn.

e) Measure the output amplitude of each channel.

f) Calculate the gain difference as the maximum difference in the measured output amplitude between any pair of two channels.

6.1.2.4 Results of the measurement

The gain difference shall be expressed in dB.

6.2 Frequency response

6.2.1 Method of measurement

Connect the **EUT** and the measuring equipment as shown in Figure 3.

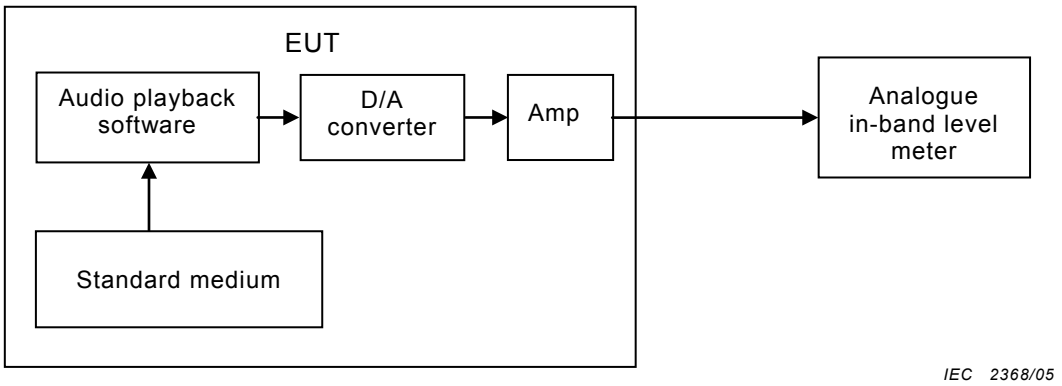

Figure 3 – Block diagram for frequency-response measurement

Documents
Document Sharing Hub
Full document details: IEC 61606-4 2005

6.2.2 Input signal

a) Reference signal:

Frequency: 997 Hz

Signal level: **normal measuring level** (–20 dB_{FS})

b) Test signal

Frequency: a) spot frequencies: see Table 1

b) sweep frequency: see note to Table 1

Signal level: **normal measuring level** (–20 dB_{FS})

6.2.3 Procedure

a) Set the **EUT** to the standard setting specified in 4.4.
b) Transfer the reference signal and the test signal data to the **standard medium**.
c) Playback the digital signal data from the **standard medium**.
d) Measure the output signal with the analogue in-band level meter.
e) Repeat the same measurement as in c) and d) for each test frequency.

6.2.4 Results of the measurement

The ratio of the measured amplitude at each frequency to the measured amplitude of the reference frequency shall be expressed in dB.

Data may be presented in a table or in a graphical form or as a tolerance in dB across a frequency range.

6.3 Noise characteristics

6.3.1 Signal-to-noise ratio

6.3.1.1 Method of measurement

Connect the **EUT** and the measuring equipment as shown in Figure 4.

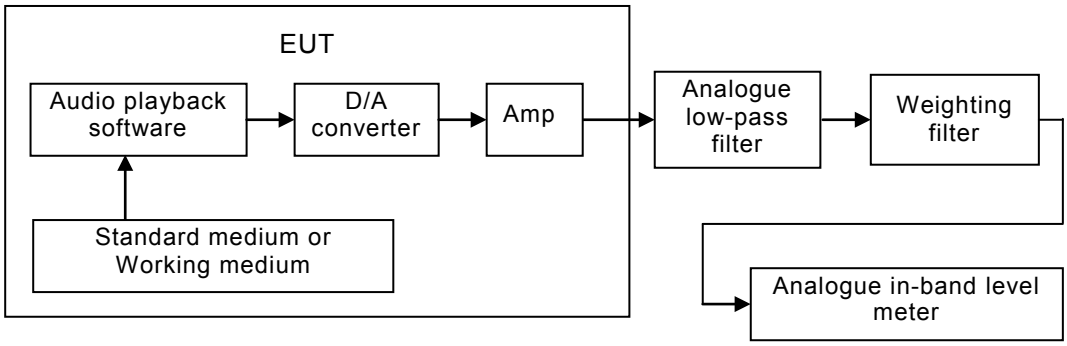

NOTE **Standard medium** is used for standard condition. **Working medium** is used for working condition.

Figure 4 – Block diagram for signal-to-noise ratio measurement

Documents
Document Sharing Hub
Full document details: IEC 61606-4 2005

6.3.1.2 Input signal

a) Signal *a*

Frequency: 997 Hz

Signal level: **full-scale level** (0 dB_{FS})

b) Signal *b* **digital zero**

6.3.1.3 Procedure

The measurement procedure under the standard condition is as follows.

a) Set the **EUT** to the standard setting specified in 4.4.

b) Transfer the input signal data to the **standard medium**.

c) Playback the signal *a* from the **standard medium** by audio playback software.

d) Measure the output signal amplitude as *A* in V r.m.s.

e) Playback the signal *b* from the **standard medium** by audio playback software.

f) Measure the output signal amplitude as *B in* V r.m.s.

g) The signal-to-noise ratio *SN* in dB is obtained from the equation:

$$SN = 20 \lg(A/B).$$

The measurement procedure under the working condition is the same as the above procedure. The main difference is in the setting of the **EUT**. The setting of the working condition is specified in 4.5.

6.3.1.4 Results of the measurement

The signal-to-noise ratio shall be expressed in dB.

6.3.2 Dynamic range

6.3.2.1 Method of measurement

Connect the **EUT** and the measuring equipment as shown in Figure 5.

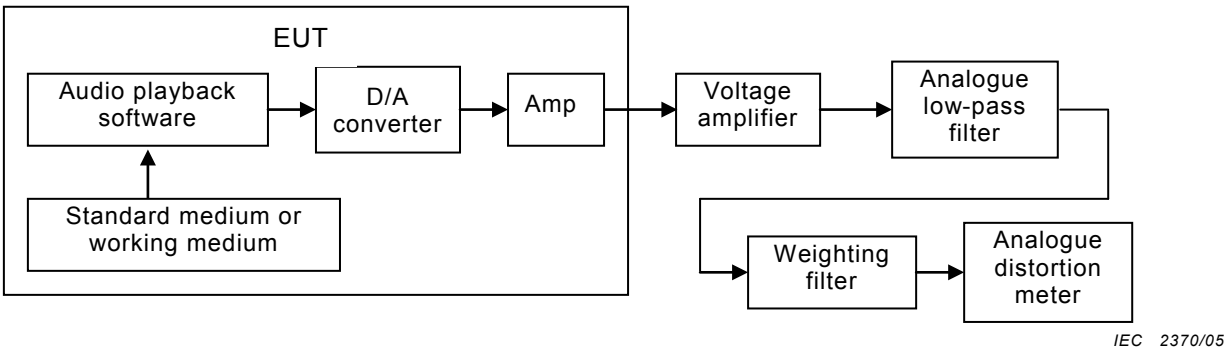

NOTE 1 If the analogue distortion meter has sufficient amplification for the measurement, the voltage amplifier may not be needed.

NOTE 2 **Standard medium** is used for standard condition. **Working medium** is used for working condition.

Figure 5 – Block diagram for dynamic range measurement

Documents
Document Sharing Hub
Full document details: IEC 61606-4 2005