IEC 61631

Edition 2.0 2020-05

INTERNATIONAL STANDARD

NORME INTERNATIONALE

Test method for the mechanical strength of cores made of magnetic oxides

Méthode d'essai pour la résistance mécanique des noyaux en oxydes magnétiques

Documents
Document Sharing Hub

IEC 61631:2020-05(en-fr)

Full document details: IEC 61631-2020

THIS PUBLICATION IS COPYRIGHT PROTECTED
Copyright © 2020 IEC, Geneva, Switzerland

All rights reserved. Unless otherwise specified, no part of this publication may be reproduced or utilized in any form or by any means, electronic or mechanical, including photocopying and microfilm, without permission in writing from either IEC or IEC's member National Committee in the country of the requester. If you have any questions about IEC copyright or have an enquiry about obtaining additional rights to this publication, please contact the address below or your local IEC member National Committee for further information.

Droits de reproduction réservés. Sauf indication contraire, aucune partie de cette publication ne peut être reproduite ni utilisée sous quelque forme que ce soit et par aucun procédé, électronique ou mécanique, y compris la photocopie et les microfilms, sans l'accord écrit de l'IEC ou du Comité national de l'IEC du pays du demandeur. Si vous avez des questions sur le copyright de l'IEC ou si vous désirez obtenir des droits supplémentaires sur cette publication, utilisez les coordonnées ci-après ou contactez le Comité national de l'IEC de votre pays de résidence.

IEC Central Office
3, rue de Varembé
CH-1211 Geneva 20
Switzerland

Tel.: +41 22 919 02 11
info@iec.ch
www.iec.ch

About the IEC
The International Electrotechnical Commission (IEC) is the leading global organization that prepares and publishes International Standards for all electrical, electronic and related technologies.

About IEC publications
The technical content of IEC publications is kept under constant review by the IEC. Please make sure that you have the latest edition, a corrigendum or an amendment might have been published.

IEC publications search - webstore.iec.ch/advsearchform
The advanced search enables to find IEC publications by a variety of criteria (reference number, text, technical committee,…). It also gives information on projects, replaced and withdrawn publications.

IEC Just Published - webstore.iec.ch/justpublished
Stay up to date on all new IEC publications. Just Published details all new publications released. Available online and once a month by email.

IEC Customer Service Centre - webstore.iec.ch/csc
If you wish to give us your feedback on this publication or need further assistance, please contact the Customer Service Centre: sales@iec.ch.

Electropedia - www.electropedia.org
The world's leading online dictionary on electrotechnology, containing more than 22 000 terminological entries in English and French, with equivalent terms in 16 additional languages. Also known as the International Electrotechnical Vocabulary (IEV) online.

IEC Glossary - std.iec.ch/glossary
67 000 electrotechnical terminology entries in English and French extracted from the Terms and Definitions clause of IEC publications issued since 2002. Some entries have been collected from earlier publications of IEC TC 37, 77, 86 and CISPR.

A propos de l'IEC
La Commission Electrotechnique Internationale (IEC) est la première organisation mondiale qui élabore et publie des Normes internationales pour tout ce qui a trait à l'électricité, à l'électronique et aux technologies apparentées.

A propos des publications IEC
Le contenu technique des publications IEC est constamment revu. Veuillez vous assurer que vous possédez l'édition la plus récente, un corrigendum ou amendement peut avoir été publié.

Recherche de publications IEC - webstore.iec.ch/advsearchform
La recherche avancée permet de trouver des publications IEC en utilisant différents critères (numéro de référence, texte, comité d'études,…). Elle donne aussi des informations sur les projets et les publications remplacées ou retirées.

IEC Just Published - webstore.iec.ch/justpublished
Restez informé sur les nouvelles publications IEC. Just Published détaille les nouvelles publications parues. Disponible en ligne et une fois par mois par email.

Service Clients - webstore.iec.ch/csc
Si vous désirez nous donner des commentaires sur cette publication ou si vous avez des questions contactez-nous: sales@iec.ch.

Electropedia - www.electropedia.org
Le premier dictionnaire d'électrotechnologie en ligne au monde, avec plus de 22 000 articles terminologiques en anglais et en français, ainsi que les termes équivalents dans 16 langues additionnelles. Egalement appelé Vocabulaire Electrotechnique International (IEV) en ligne.

Glossaire IEC - std.iec.ch/glossary
67 000 entrées terminologiques électrotechniques, en anglais et en français, extraites des articles Termes et Définitions des publications IEC parues depuis 2002. Plus certaines entrées antérieures extraites des publications des CE 37, 77, 86 et CISPR de l'IEC.

Documents
Document Sharing Hub

Full document details: IEC 61631-2020

IEC 61631

Edition 2.0 2020-05

INTERNATIONAL STANDARD

NORME INTERNATIONALE

Test method for the mechanical strength of cores made of magnetic oxides

Méthode d'essai pour la résistance mécanique des noyaux en oxydes magnétiques

INTERNATIONAL
ELECTROTECHNICAL
COMMISSION

COMMISSION
ELECTROTECHNIQUE
INTERNATIONALE

ICS 29.100.10

ISBN 978-2-8322-9051-4

Warning! Make sure that you obtained this publication from an authorized distributor.
Attention! Veuillez vous assurer que vous avez obtenu cette publication via un distributeur agréé.

AVA Documents
Document Sharing Hub

® Registered trademark of the International Electrotechnical Commission
Marque déposée de la Commission Electrotechnique Internationale

Full document details: IEC 61631-2020

CONTENTS

FOREWORD 3
INTRODUCTION 5
1 Scope 6
2 Normative references 6
3 Terms and definitions 6
4 Apparatus 6
4.1 Test core support and loading wedge 6
4.2 Testing device 7
4.3 Humidity measuring device 7
5 Test cores 7
5.1 General 7
5.2 Number of test cores 7
5.3 Precautions 7
6 Testing 7
6.1 Test conditions 7
6.2 Test procedures 7
6.2.1 General 7
6.2.2 Test of E-cores 8
6.2.3 Test of I-cores 10
6.2.4 Test of ring-cores 10
Annex A (normative) Standard dimensions of E-cores and their support for strength test 13
A.1 General 13
A.2 Designation 13
A.3 Test core support 13
Annex B (normative) Standard dimensions of ring-cores and methods for strength test 15
B.1 General 15
B.2 Selection of mechanical strength test method for ring-core 15
Bibliography 16

Figure 1 – E test 8
Figure 2 – W test 9
Figure 3 – T test 9
Figure 4 – M test 10
Figure 5 – I test 10
Figure 6 – Stretching method 11
Figure 7 – Shearing method 12
Figure 8 – Pressure method 12
Figure A.1 – Designation of E-core 13
Figure B.1 – Dimensions of ring-core 15

Table A.1 – Test core support 14
Table B.1 – Ring-core dimension designations 15

AVA Documents
Document Sharing Hub

Full document details: IEC 61631-2020

INTERNATIONAL ELECTROTECHNICAL COMMISSION

TEST METHOD FOR THE MECHANICAL STRENGTH OF CORES MADE OF MAGNETIC OXIDES

FOREWORD

1) The International Electrotechnical Commission (IEC) is a worldwide organization for standardization comprising all national electrotechnical committees (IEC National Committees). The object of IEC is to promote international co-operation on all questions concerning standardization in the electrical and electronic fields. To this end and in addition to other activities, IEC publishes International Standards, Technical Specifications, Technical Reports, Publicly Available Specifications (PAS) and Guides (hereafter referred to as "IEC Publication(s)"). Their preparation is entrusted to technical committees; any IEC National Committee interested in the subject dealt with may participate in this preparatory work. International, governmental and non-governmental organizations liaising with the IEC also participate in this preparation. IEC collaborates closely with the International Organization for Standardization (ISO) in accordance with conditions determined by agreement between the two organizations.
2) The formal decisions or agreements of IEC on technical matters express, as nearly as possible, an international consensus of opinion on the relevant subjects since each technical committee has representation from all interested IEC National Committees.
3) IEC Publications have the form of recommendations for international use and are accepted by IEC National Committees in that sense. While all reasonable efforts are made to ensure that the technical content of IEC Publications is accurate, IEC cannot be held responsible for the way in which they are used or for any misinterpretation by any end user.
4) In order to promote international uniformity, IEC National Committees undertake to apply IEC Publications transparently to the maximum extent possible in their national and regional publications. Any divergence between any IEC Publication and the corresponding national or regional publication shall be clearly indicated in the latter.
5) IEC itself does not provide any attestation of conformity. Independent certification bodies provide conformity assessment services and, in some areas, access to IEC marks of conformity. IEC is not responsible for any services carried out by independent certification bodies.
6) All users should ensure that they have the latest edition of this publication.
7) No liability shall attach to IEC or its directors, employees, servants or agents including individual experts and members of its technical committees and IEC National Committees for any personal injury, property damage or other damage of any nature whatsoever, whether direct or indirect, or for costs (including legal fees) and expenses arising out of the publication, use of, or reliance upon, this IEC Publication or any other IEC Publications.
8) Attention is drawn to the Normative references cited in this publication. Use of the referenced publications is indispensable for the correct application of this publication.
9) Attention is drawn to the possibility that some of the elements of this IEC Publication may be the subject of patent rights. IEC shall not be held responsible for identifying any or all such patent rights.

International Standard IEC 61631 has been prepared by IEC technical committee 51: Magnetic components, ferrite and magnetic powder materials.

This second edition cancels and replaces the first edition published in 2001. This edition constitutes a technical revision.

This edition includes the following significant technical changes with respect to the previous edition:

a) the phrase: "This document is also applicable to the mechanical strength measurement of magnetic powder cores" has been added in the scope;
b) IEC 61246 has been replaced by IEC 63093-8; EN 1002-2 has been replaced by ISO 7500-1; ISO 4677-1 and ISO 4677-2 have been withdrawn;
c) dimensions D and F in Figure A.1 and Table A.1 have been changed to be consistent with Figure 1 of IEC 63093-8:2018;
d) addition of the content of ring-cores test;
e) addition of Annex B;

Documents
Document Sharing Hub
Full document details: IEC 61631-2020

f) the location of the jig is amended in Figure 3;

g) in Figure 5, the roller bars are moved to the edge of the I-core, aligned with the core.

The text of this International Standard is based on the following documents:

CDV	Report on voting
51/1312/CDV	51/1333/RVC

Full information on the voting for the approval of this International Standard can be found in the report on voting indicated in the above table.

This document has been drafted in accordance with the ISO/IEC Directives, Part 2.

The committee has decided that the contents of this document will remain unchanged until the stability date indicated on the IEC website under "http://webstore.iec.ch" in the data related to the specific document. At this date, the document will be

- reconfirmed,
- withdrawn,
- replaced by a revised edition, or
- amended.

Documents
Document Sharing Hub

Full document details: IEC 61631-2020

INTRODUCTION

The method specified in this document is intended to be used for obtaining agreements between parties for material development, quality checking, characterization and data acquisition purposes. The method places closely defined restrictions on the arrangement of the test-piece and the function of the test apparatus, including the test-jigs, in order to minimize the errors that can arise as a consequence of the test method.

All other factors are stated in the test report for comparison of the behavior of the magnetic oxide cores. It is not possible to rigorously standardize particular surface finishes, since it is difficult to control all the mechanical factors. But the state of the surface in the report should be mentioned, as surface defects can have a large effect on mechanical strength in certain types of tests (see Clause 6). The extrapolation of mechanical strength data to other geometries, multi-axial stressing, other rates of stressing or other environmental conditions, should be viewed with caution. The origin of a fracture in a mechanical test piece can be a valuable guide to the nature and position of strength-limiting defects (such as pores, large grains and impurity concentration).

The results of strength tests are influenced by a combination of the following factors: the microstructure of the material, the surface finishing procedure applied to the test cores, the size and shape of the test cores, the mechanical parameters of the testing apparatus, the rate of load application and the relative humidity of the ambient atmosphere. Because of the ceramic nature of magnetic oxide cores, a considerable range of results is usually obtained from a number of nominally identical test cores. Thus test results are interpreted with caution.

Documents
Document Sharing Hub

Full document details: IEC 61631-2020

TEST METHOD FOR THE MECHANICAL STRENGTH OF CORES MADE OF MAGNETIC OXIDES

1 Scope

This document specifies a test method for the mechanical strength of cores made of magnetic oxides. This test method is suitable for most of the E-cores, ETD-cores, I-cores and ring-cores but other core types such as U-cores could be tested according to a derived method agreed by the parties concerned. This document is also applicable to the mechanical strength measurement of magnetic powder cores.

2 Normative references

The following documents are referred to in the text in such a way that some or all of their content constitutes requirements of this document. For dated references, only the edition cited applies. For undated references, the latest edition of the referenced document (including any amendments) applies.

ISO 7500-2, *Metallic materials – Verification of static uniaxial testing machines – Part 2: Tension creep testing machines – Verification of the applied force*

3 Terms and definitions

For the purposes of this document, the following terms and definitions apply.

ISO and IEC maintain terminological databases for use in standardization at the following addresses:

- IEC Electropedia: available at http://www.electropedia.org/
- ISO Online browsing platform: available at http://www.iso.org/obp

3.1
mechanical strength
maximum recorded force at the instant of fracture of a magnetic oxide core when it is loaded with the bending stress

4 Apparatus

4.1 Test core support and loading wedge

Test cores shall be supported on free moving roller bars or on a flat support depending on their size (see 6.2). The loading wedge, the roller bars and the stretch bar or the flat support shall be made of hardened steel with a hardness of 40 HRC (HRC is Rockwell hardness) to 60 HRC. The loading wedge and the roller bars shall have a radius of 2 mm. The radius of the contact part of the stretching rod head and the measured core is 2 mm. The loading wedge and the stretch bar shall be connected to a device for measuring and recording the load applied.

Documents
Document Sharing Hub
Full document details: IEC 61631-2020

4.2 Testing device

The testing device shall be a mechanical testing machine capable of applying a force to the loading wedge high enough to break the test core. The machine shall be capable of applying the force at a constant loading rate. The machine shall be equipped with a device for recording the peak load applied to the test core. The accuracy of the machine shall be 1 % of the indicated load. The force calibration of the machine shall be checked in accordance with ISO 7500-2.

4.3 Humidity measuring device

A humidity measuring device, such as, but not limited to, an aspirated psychrometer or whirling psychrometer that is capable of measuring relative humidity to an accuracy of ±2 % shall be used.

5 Test cores

5.1 General

The test cores shall be selected as agreed between the parties concerned. They may be machined to the specified dimensions, because any machined surface plays an important role in the mechanical strength (see the Introduction).

5.2 Number of test cores

For material development, characterization or quality checking, the minimum number of test cores shall be five pieces. For statistical evaluation of strength data (for example, Weibull parameters), the minimum number shall be thirty.

For comparison of data for different materials, it is important that the number of specimens is high enough to obtain results with sufficient statistical confidence. Since the confidence limits, in general, depend on the number of test results and their dispersion, the number of test specimens should be decided on the basis of statistical considerations.

5.3 Precautions

The prepared test cores should be handled with care to avoid introduction of additional damage. Test cores should be kept separately at all times, and should be wrapped individually for transport.

6 Testing

6.1 Test conditions

The test shall be carried out at an ambient temperature between 15 °C and 35 °C. The temperature shall not vary by more than 3 °C during the course of a test series. The relative humidity shall be between 45 % and 85 % and shall not vary by more than 10 % during the course of a test series.

6.2 Test procedures

6.2.1 General

The test core shall be arranged in the test apparatus in accordance with 6.2.2.2, 6.2.2.3, 6.2.2.4, 6.2.2.5, 6.2.3, 6.2.4.2.2, 6.2.4.2.3 or 6.2.4.2.4 as applicable (see Figure 1 to Figure 8). For standard dimensions of E-cores and their support for strength test see Annex A.

Documents
Document Sharing Hub

Full document details: IEC 61631-2020

The E test and W test can be used for material-related purposes, while the M test and T test can be used for process-related purposes. The test of I-cores is only recommended for flat-shaped test cores such as antenna rods. The test method of stretching, shearing and pressure is only applicable to ring-cores. A preloading force of 5 N to 25 N shall be applied because the upper and lower faces of the test cores are never absolutely parallel. The test force shall then be applied at a loading rate of between 5 mm/min and 20 mm/min until the test core fractures. The load at the instant of fracture shall be recorded. The fractured fragments shall be identified and preserved for later fractographic examination.

6.2.2 Test of E-cores

6.2.2.1 Dimensions

The specifications and dimensions of E-cores are according to IEC 63093-8.

6.2.2.2 E test

For test core sizes equal to or larger than E13, the test core shall be placed on roller bars as shown in Figure 1. For test core sizes less than E13, the test core shall be placed on a flat support as shown in Figure 1. The load shall be applied through the loading wedge, and the load at the instant of fracture recorded.

Dimensions in millimeters

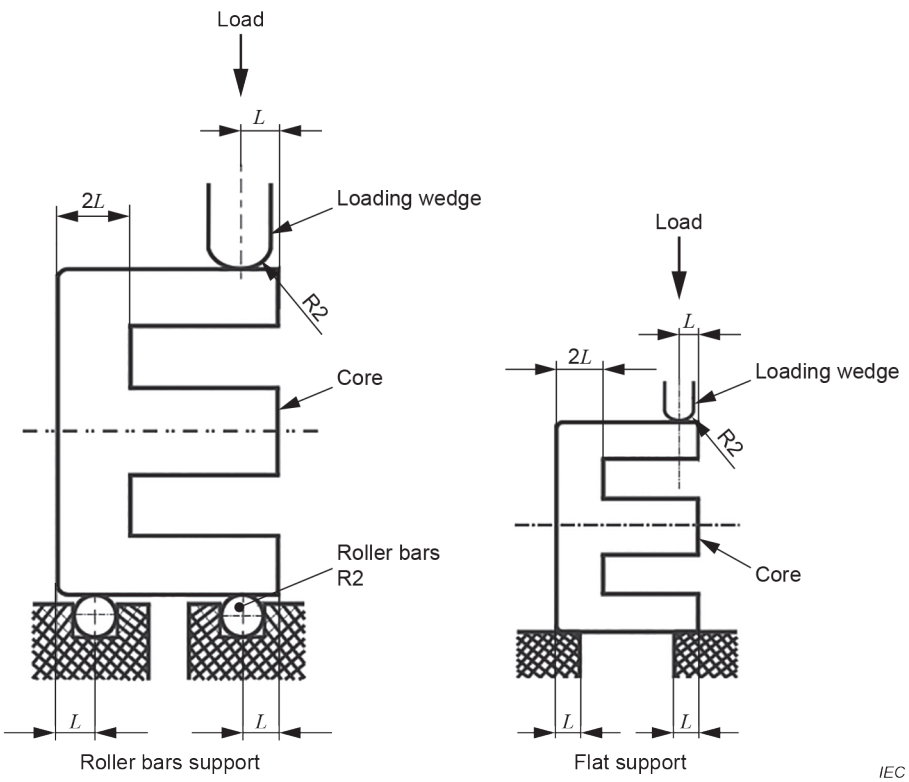

Figure 1 – E test

6.2.2.3 W test

For test core sizes equal to or larger than E13, the test core shall be placed on roller bars as shown in Figure 2. For test core sizes less than E13, the test core shall be placed on a flat support as shown in Figure 2. The load shall be applied through the loading wedge, and the load at the instant of fracture recorded.

Documents
Document Sharing Hub
Full document details: IEC 61631-2020

Dimensions in millimeters

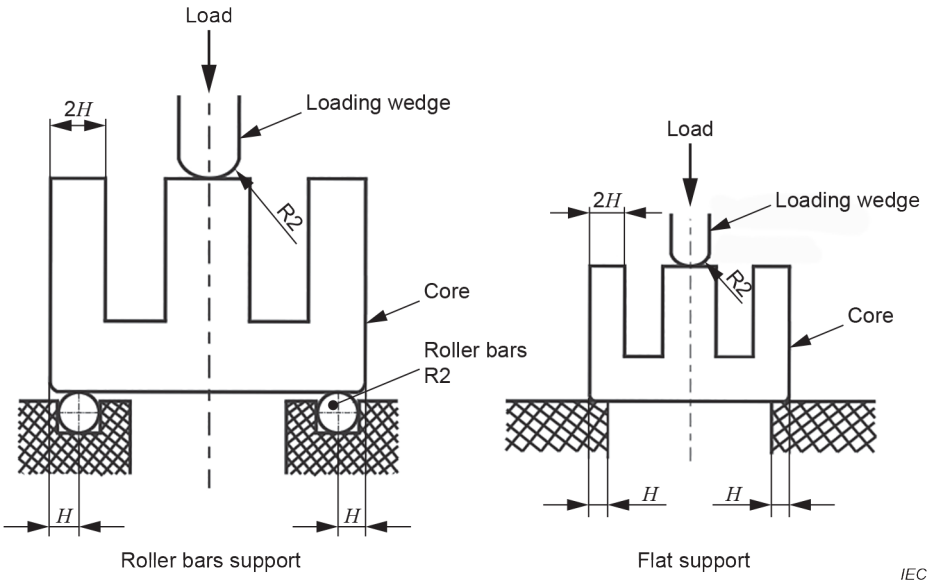

Figure 2 – W test

6.2.2.4 T test

The test core shall be placed as shown in Figure 3. For test core sizes equal to or larger than E32, the load shall be applied to the core legs from the roller bars as shown in Figure 3. For test core sizes less than E32, the load shall be applied through jigs, which shall be agreed between the parties concerned, and the load at the instant of fracture recorded.

Dimensions in millimeters

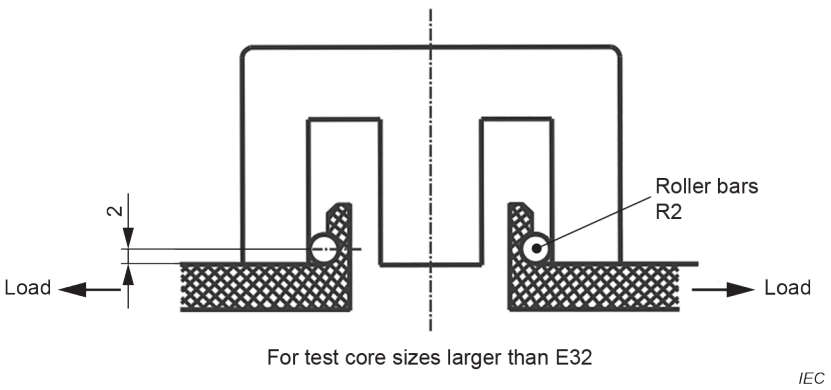

Figure 3 – T test

6.2.2.5 M test

For test core sizes equal to or larger than E13, the test core shall be placed on roller bars as shown in Figure 4. For test core sizes less than E13, the test core shall be placed on a flat support as shown in Figure 4. The load shall be applied through the loading wedge, and the load at the instant of fracture recorded.

Documents
Document Sharing Hub
Full document details: IEC 61631-2020