IEC 61636

Edition 1.0 2016-11

INTERNATIONAL STANDARD

IEEE Std 1636™

Software Interface for Maintenance Information Collection and Analysis (SIMICA)

IEC 61636:2016-11(en) IEEE Std 1636-2013

Documents
Document Sharing Hub

Full document details: IEC 61636 2016

THIS PUBLICATION IS COPYRIGHT PROTECTED
Copyright © 2013 IEEE

All rights reserved. IEEE is a registered trademark in the U.S. Patent & Trademark Office, owned by the Institute of Electrical and Electronics Engineers, Inc. Unless otherwise specified, no part of this publication may be reproduced or utilized in any form or by any means, electronic or mechanical, including photocopying and microfilm, without permission in writing from the IEC Central Office. Any questions about IEEE copyright should be addressed to the IEEE. Enquiries about obtaining additional rights to this publication and other information requests should be addressed to the IEC or your local IEC member National Committee.

IEC Central Office
3, rue de Varembé
CH-1211 Geneva 20
Switzerland
Tel.: +41 22 919 02 11
Fax: +41 22 919 03 00
info@iec.ch
www.iec.ch

Institute of Electrical and Electronics Engineers, Inc.
3 Park Avenue
New York, NY 10016-5997
United States of America
stds.info@ieee.org
www.ieee.org

About the IEC
The International Electrotechnical Commission (IEC) is the leading global organization that prepares and publishes International Standards for all electrical, electronic and related technologies.

About IEC publications
The technical content of IEC publications is kept under constant review by the IEC. Please make sure that you have the latest edition, a corrigenda or an amendment might have been published.

IEC Catalogue - webstore.iec.ch/catalogue
The stand-alone application for consulting the entire bibliographical information on IEC International Standards, Technical Specifications, Technical Reports and other documents. Available for PC, Mac OS, Android Tablets and iPad.

IEC publications search - www.iec.ch/searchpub
The advanced search enables to find IEC publications by a variety of criteria (reference number, text, technical committee,…). It also gives information on projects, replaced and withdrawn publications.

IEC Just Published - webstore.iec.ch/justpublished
Stay up to date on all new IEC publications. Just Published details all new publications released. Available online and also once a month by email.

Electropedia - www.electropedia.org
The world's leading online dictionary of electronic and electrical terms containing 20 000 terms and definitions in English and French, with equivalent terms in 15 additional languages. Also known as the International Electrotechnical Vocabulary (IEV) online.

IEC Glossary - std.iec.ch/glossary
65 000 electrotechnical terminology entries in English and French extracted from the Terms and Definitions clause of IEC publications issued since 2002. Some entries have been collected from earlier publications of IEC TC 37, 77, 86 and CISPR.

IEC Customer Service Centre - webstore.iec.ch/csc
If you wish to give us your feedback on this publication or need further assistance, please contact the Customer Service Centre: csc@iec.ch.

AVA Documents
Document Sharing Hub

Full document details: IEC 61636 2016

IEC 61636

Edition 1.0 2016-11

INTERNATIONAL STANDARD

IEEE Std 1636™

Software Interface for Maintenance Information Collection and Analysis (SIMICA)

INTERNATIONAL
ELECTROTECHNICAL
COMMISSION

ICS 25.040.01; 35.060

ISBN 978-2-8322-3686-4

Warning! Make sure that you obtained this publication from an authorized distributor.

® Registered trademark of the International Electrotechnical Commission

Documents
Document Sharing Hub

Full document details: IEC 61636 2016

Contents

1. Overview 1
1.1 General 1
1.2 Scope 3
1.3 Purpose 3
1.4 Application 3
1.5 Conventions used in this document 3

2. Normative references 3

3. Definitions 4

4. Backgrounds 5
4.1 Diagnostic maturation 5
4.2 Relationship to IEEE Std 1232 (AI-ESTATE) 6
4.3 Relationship to IEEE 1636 (SIMICA) component standards 6

5. Information model 6
5.1 SIMICA_MODEL 7

6. Conformance 20

Annex A (informative) Bibliography 21

Annex B (informative) Overview of EXPRESS 22
B.1 Schema 22
B.2 Entity 22
B.3 Attribute 23
B.4 Type definition 24
B.5 Subtypes/supertypes 24
B.6 External schema references 25
B.7 Uniqueness constraints and WHERE clauses 26
B.8 Functions and procedures 27

Annex C (informative) IEEE list of participants 28

Published by IEC under license from IEEE. © 2013 IEEE. All rights reserved.

Documents
Document Sharing Hub

Full document details: IEC 61636 2016

SOFTWARE INTERFACE FOR MAINTENANCE INFORMATION COLLECTION AND ANALYSIS (SIMICA)

FOREWORD

1) The International Electrotechnical Commission (IEC) is a worldwide organization for standardization comprising all national electrotechnical committees (IEC National Committees). The object of IEC is to promote international co-operation on all questions concerning standardization in the electrical and electronic fields. To this end and in addition to other activities, IEC publishes International Standards, Technical Specifications, Technical Reports, Publicly Available Specifications (PAS) and Guides (hereafter referred to as "IEC Publication(s)"). Their preparation is entrusted to technical committees; any IEC National Committee interested in the subject dealt with may participate in this preparatory work. International, governmental and non-governmental organizations liaising with the IEC also participate in this preparation.

   IEEE Standards documents are developed within IEEE Societies and Standards Coordinating Committees of the IEEE Standards Association (IEEE-SA) Standards Board. IEEE develops its standards through a consensus development process, which brings together volunteers representing varied viewpoints and interests to achieve the final product. Volunteers are not necessarily members of IEEE and serve without compensation. While IEEE administers the process and establishes rules to promote fairness in the consensus development process, IEEE does not independently evaluate, test, or verify the accuracy of any of the information contained in its standards. Use of IEEE Standards documents is wholly voluntary. IEEE documents are made available for use subject to important notices and legal disclaimers (see http://standards.ieee.org/IPR/disclaimers.html for more information).

   IEC collaborates closely with IEEE in accordance with conditions determined by agreement between the two organizations.

2) The formal decisions of IEC on technical matters express, as nearly as possible, an international consensus of opinion on the relevant subjects since each technical committee has representation from all interested IEC National Committees. The formal decisions of IEEE on technical matters, once consensus within IEEE Societies and Standards Coordinating Committees has been reached, is determined by a balanced ballot of materially interested parties who indicate interest in reviewing the proposed standard. Final approval of the IEEE standards document is given by the IEEE Standards Association (IEEE-SA) Standards Board.

3) IEC/IEEE Publications have the form of recommendations for international use and are accepted by IEC National Committees/IEEE Societies in that sense. While all reasonable efforts are made to ensure that the technical content of IEC/IEEE Publications is accurate, IEC or IEEE cannot be held responsible for the way in which they are used or for any misinterpretation by any end user.

4) In order to promote international uniformity, IEC National Committees undertake to apply IEC Publications (including IEC/IEEE Publications) transparently to the maximum extent possible in their national and regional publications. Any divergence between any IEC/IEEE Publication and the corresponding national or regional publication shall be clearly indicated in the latter.

5) IEC and IEEE do not provide any attestation of conformity. Independent certification bodies provide conformity assessment services and, in some areas, access to IEC marks of conformity. IEC and IEEE are not responsible for any services carried out by independent certification bodies.

6) All users should ensure that they have the latest edition of this publication.

7) No liability shall attach to IEC or IEEE or their directors, employees, servants or agents including individual experts and members of technical committees and IEC National Committees, or volunteers of IEEE Societies and the Standards Coordinating Committees of the IEEE Standards Association (IEEE-SA) Standards Board, for any personal injury, property damage or other damage of any nature whatsoever, whether direct or indirect, or for costs (including legal fees) and expenses arising out of the publication, use of, or reliance upon, this IEC/IEEE Publication or any other IEC or IEEE Publications.

8) Attention is drawn to the normative references cited in this publication. Use of the referenced publications is indispensable for the correct application of this publication.

9) Attention is drawn to the possibility that implementation of this IEC/IEEE Publication may require use of material covered by patent rights. By publication of this standard, no position is taken with respect to the existence or validity of any patent rights in connection therewith. IEC or IEEE shall not be held responsible for identifying Essential Patent Claims for which a license may be required, for conducting inquiries into the legal validity or scope of Patent Claims or determining whether any licensing terms or conditions provided in connection with submission of a Letter of Assurance, if any, or in any licensing agreements are reasonable or non-discriminatory. Users of this standard are expressly advised that determination of the validity of any patent rights, and the risk of infringement of such rights, is entirely their own responsibility.

AVA Documents
Document Sharing Hub

Full document details: IEC 61636 2016

International Standard IEC 61636/IEEE Std 1636 has been processed through IEC technical committee 91: Electronics assembly technology, under the IEC/IEEE Dual Logo Agreement.

The text of this standard is based on the following documents:

IEEE Std	FDIS	Report on voting
1636 (2009)	91/1359/FDIS	91/1370/RVD

Full information on the voting for the approval of this standard can be found in the report on voting indicated in the above table.

The IEC Technical Committee and IEEE Technical Committee have decided that the contents of this publication will remain unchanged until the stability date indicated on the IEC web site under "http://webstore.iec.ch" in the data related to the specific publication. At this date, the publication will be

- reconfirmed,
- withdrawn,
- replaced by a revised edition, or
- amended.

Documents
Document Sharing Hub
Full document details: IEC 61636 2016

IEEE Standard for Software Interface for Maintenance Information Collection and Analysis (SIMICA)

Sponsor

IEEE Standards Coordinating Committee 20 on Test and Diagnosis for Electronic Systems

Approved 19 March 2009

IEEE-SA Standards Board

Approved as a Full-Use Standard 5 December 2013

IEEE-SA Standards Board

Published by IEC under license from IEEE. © 2013 IEEE. All rights reserved.

Documents
Document Sharing Hub

Full document details: IEC 61636 2016

Abstract: This document provides an implementation-independent specification for a software interface to information systems containing data pertinent to the diagnosis and maintenance of complex systems consisting of hardware, software, or any combination thereof. These interfaces will support service definitions for creating application programming interfaces (API) for the access, exchange, and analysis of historical diagnostic and maintenance information. This will address the pervasive need of organizations to assess the effectiveness of diagnostics for complex systems throughout the product life cycle. The use of formal information models will facilitate exchanging historical maintenance information between information systems and analysis tools. The models will facilitate creating open system software architectures for maturing system diagnostics.

Keywords: AI-ESTATE, Automated Test Markup Language (ATML), diagnostic maturation, IEEE 1636™, Maintenance Action Information, maintenance data, Software Interface for Maintenance Information Collection and Analysis (SIMICA), Test Results and Session Information

Published by IEC under license from IEEE. © 2013 IEEE. All rights reserved.

Documents
Document Sharing Hub

Full document details: IEC 61636 2016

IEEE Introduction

This introduction is not part of IEEE Std 1636-2009, IEEE Standard for Software Interface for Maintenance Information Collection and Analysis (SIMICA).

The requirement for a specification for access and exchange of diagnostic and maintenance product information has arisen due to a pervasive need for the organizations who deliver complex systems to monitor the effectiveness of their product health management solutions in their customers' application domains. Accordingly, The IEEE SCC20 Diagnostic and Maintenance Control (DMC) subcommittee has undertaken the task of developing a standard which fulfills this need. It is envisioned that SIMICA will fulfill this need for all such consumers of diagnostic and maintenance data.

Notice to users

Laws and regulations

Users of IEEE Standards documents should consult all applicable laws and regulations. Compliance with the provisions of any IEEE Standards document does not imply compliance to any applicable regulatory requirements. Implementers of the standard are responsible for observing or referring to the applicable regulatory requirements. IEEE does not, by the publication of its standards, intend to urge action that is not in compliance with applicable laws, and these documents may not be construed as doing so.

Copyrights

This document is copyrighted by the IEEE. It is made available for a wide variety of both public and private uses. These include both use, by reference, in laws and regulations, and use in private self-regulation, standardization, and the promotion of engineering practices and methods. By making this document available for use and adoption by public authorities and private users, the IEEE does not waive any rights in copyright to this document.

Updating of IEEE documents

Users of IEEE Standards documents should be aware that these documents may be superseded at any time by the issuance of new editions or may be amended from time to time through the issuance of amendments, corrigenda, or errata. An official IEEE document at any point in time consists of the current edition of the document together with any amendments, corrigenda, or errata then in effect. In order to determine whether a given document is the current edition and whether it has been amended through the issuance of amendments, corrigenda, or errata, visit the IEEE-SA Website at http://standards.ieee.org/index.html or contact the IEEE at the address listed previously. For more information about the IEEE Standards Association or the IEEE standards development process, visit IEEE-SA Website at http://standards.ieee.org/index.html.

Published by IEC under license from IEEE. © 2013 IEEE. All rights reserved.

Documents
Document Sharing Hub

Full document details: IEC 61636 2016

Errata

Errata, if any, for this and all other standards can be accessed at the following URL: http://standards.ieee.org/findstds/errata/index.html. Users are encouraged to check this URL for errata periodically.

Patents

Attention is called to the possibility that implementation of this standard may require use of subject matter covered by patent rights. By publication of this standard, no position is taken by the IEEE with respect to the existence or validity of any patent rights in connection therewith. If a patent holder or patent applicant has filed a statement of assurance via an Accepted Letter of Assurance, then the statement is listed on the IEEE-SA Website at http://standards.ieee.org/about/sasb/patcom/patents.html. Letters of Assurance may indicate whether the Submitter is willing or unwilling to grant licenses under patent rights without compensation or under reasonable rates, with reasonable terms and conditions that are demonstrably free of any unfair discrimination to applicants desiring to obtain such licenses.

Essential Patent Claims may exist for which a Letter of Assurance has not been received. The IEEE is not responsible for identifying Essential Patent Claims for which a license may be required, for conducting inquiries into the legal validity or scope of Patents Claims, or determining whether any licensing terms or conditions provided in connection with submission of a Letter of Assurance, if any, or in any licensing agreements are reasonable or non-discriminatory. Users of this standard are expressly advised that determination of the validity of any patent rights, and the risk of infringement of such rights, is entirely their own responsibility. Further information may be obtained from the IEEE Standards Association.

Published by IEC under license from IEEE. © 2013 IEEE. All rights reserved.

Documents
Document Sharing Hub

Full document details: IEC 61636 2016

Software Interface for Maintenance Information Collection and Analysis (SIMICA)

IMPORTANT NOTICE: IEEE Standards documents are not intended to ensure safety, health, or environmental protection, or ensure against interference with or from other devices or networks. Implementers of IEEE Standards documents are responsible for determining and complying with all appropriate safety, security, environmental, health, and interference protection practices and all applicable laws and regulations.

This IEEE document is made available for use subject to important notices and legal disclaimers. These notices and disclaimers appear in all publications containing this document and may be found under the heading "Important Notice" or "Important Notices and Disclaimers Concerning IEEE Documents." They can also be obtained on request from IEEE or viewed at http://standards.ieee.org/IPR/disclaimers.html.

1. Overview

1.1 General

This Standard Software Interface for Maintenance Information Collection and Analysis (SIMICA) was developed by the Diagnostic and Maintenance Control Subcommittee of the IEEE Standards Coordinating Committee 20 on Test and Diagnosis for Electronic Systems (SCC20) to provide standard, unambiguous definitions of maintenance information semantics, interrelationships, and access services. This standard defines a formal conceptual information model to relate maintenance information across concrete information models. These models are related to the maturation of diagnostic systems and as such are directly related to IEEE Std 1232™[1]. However this standard, in conjunction with its component standards, can also be used independent of AI-ESTATE.

The goals of the 1636 family of standards are summarized here:

— Provide definitions of maintenance concepts and terminology relevant to the maturation of diagnostic systems.

— Provide a set of information models that will serve as a basis for unambiguous interpretation and communication of such data.

[1] Information on references can be found in Clause 2.

Published by IEC under license from IEEE. © 2013 IEEE. All rights reserved.

Documents
Document Sharing Hub

Full document details: IEC 61636 2016

— Support the development of a software interface for moving such data between conforming applications.

This standard specifically describes a set of formal specifications consisting of the logical representation of the information that is used and generated during related diagnostic and maintenance processes. The information model contained in this document provides a standard model of the top-level information concepts that support these processes. Other components of this family of standards will further develop conceptual decompositions of key elements of these processes down to the elemental data level, where specific software interfaces can be represented. The relationship of these components to each other is shown in Figure 1. IEEE Std 1636.1™ defines an information model and XML schema for exchanging test result and session information. IEEE P1636.2™ defines an information model and XML schema for exchanging maintenance action information. Precise specification of the semantics of these data elements will provide the basis for services supporting the unambiguous exchange of information between producers and consumers of historical diagnosis and maintenance information in a platform-independent manner. SIMICA exhibits a close relationship to the IEEE Std 1232 through its direct use of Dynamic Context Model historical records of diagnostic sessions, which is also shown in Figure 1. The intent of this relationship is to relate diagnostic session information to associated maintenance actions for further analysis and maturation of diagnostic models and reasoner learning mechanisms.

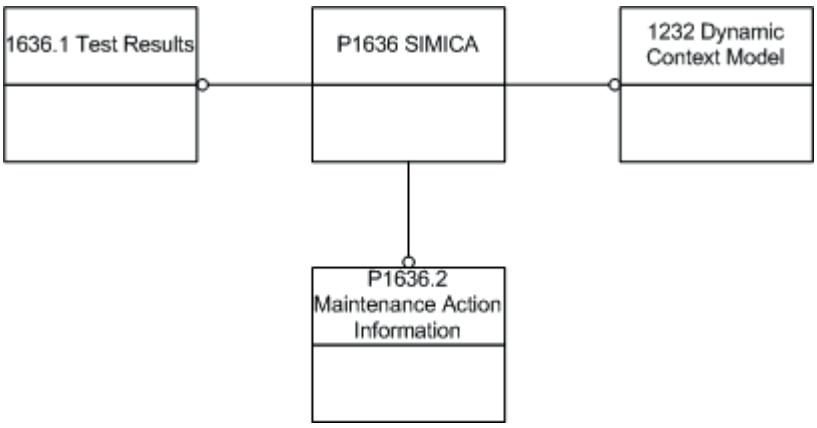

Figure 1—Relationship of SIMICA component EXPRESS schemata

This standard family provides a controlled extension mechanism of its software interface components to allow inclusion of relevant new maintenance information elements currently outside the scope of the SIMICA specification.

The SIMICA family of standards defines key information specification formats. Implementations that use only these specification formats will be portable. This does not preclude use of SIMICA interfaces with non-conformant specification formats; however, such implementations may not be portable.

Software specifications defined in the SIMICA family of standards will support the interchangeability of information between conformant applications. This will allow a large degree of flexibility in implementation of information application architectures that support information reuse and realize various maintenance information services (such as, but not limited to, client-server approaches, service oriented architectures, etc.).

Published by IEC under license from IEEE. © 2013 IEEE. All rights reserved.

Documents
Document Sharing Hub

Full document details: IEC 61636 2016

1.2 Scope

This standard is an implementation-independent specification for a software interface to information systems containing data pertinent to the diagnosis and maintenance of complex systems consisting of hardware, software, or any combination thereof. These interfaces will support service definitions for creating application programming interfaces (API) for the access, exchange, and analysis of historical diagnostic and maintenance information. The standard will use the information models of IEEE Std 1232 as a foundation.

1.3 Purpose

The purpose of this standard is to specify a software interface for access, exchange, and analysis of product diagnostic and maintenance information. This will address the pervasive need of organizations to assess the effectiveness of diagnostics for complex systems throughout the product life cycle. The use of formal information models will facilitate exchanging historical maintenance information between information systems and analysis tools. The models will facilitate creating open system software architectures for maturing system diagnostics.

1.4 Application

This standard should be applied in the development of software applications that access or provide information relevant to the diagnosis and maintenance of systems. In the event of conflict between this standard and a component standard in the IEEE 1636 family, the component standard shall take precedence. In the event of conflict between this standard and a related standard such as IEEE Std 1232, the standard as it applies to the information being produced shall take precedence. In the event of any conflict between model comments and lexical definitions, lexical definitions shall take precedence.

1.5 Conventions used in this document

Clause 5 presents entity and concept definitions using the EXPRESS language as defined in ISO 10303-11:1994 and uses the following conventions in their presentation:

All specifications in the EXPRESS language are given in the `Courier` type font when model elements are represented outside the scope of the model.

This standard uses the vocabulary and definitions of relevant IEEE standards. In case of conflict of definitions, the following precedence shall be observed: 1) Clause 3, Definitions; 2) *The Authoritative Dictionary of IEEE Standards Terms* [B1][2] with preference given to versions of those definitions that are attributed to SCC20 standards.

2. Normative references

The following referenced documents are indispensable for the application of this document (i.e., they must be understood and used, so each referenced document is cited in text and its relationship to this document is explained). For dated references, only the edition cited applies. For undated references, the latest edition of the referenced document (including any amendments or corrigenda) applies.

[2] The numbers in brackets correspond to those of the bibliography in Annex A.

Published by IEC under license from IEEE. © 2013 IEEE. All rights reserved.

Documents
Document Sharing Hub

Full document details: IEC 61636 2016