# IEC 61675-1

Edition 3.0 2022-03
REDLINE VERSION

# INTERNATIONAL STANDARD

colour inside

## Radionuclide imaging devices – Characteristics and test conditions – Part 1: Positron emission tomographs

IEC 61675-1:2022-03 RLV(en)

AVA Documents
Document Sharing Hub

Full document details: IEC 61675-1 2022 RLV

**THIS PUBLICATION IS COPYRIGHT PROTECTED**
**Copyright © 2022 IEC, Geneva, Switzerland**

All rights reserved. Unless otherwise specified, no part of this publication may be reproduced or utilized in any form or by any means, electronic or mechanical, including photocopying and microfilm, without permission in writing from either IEC or IEC's member National Committee in the country of the requester. If you have any questions about IEC copyright or have an enquiry about obtaining additional rights to this publication, please contact the address below or your local IEC member National Committee for further information.

IEC Secretariat
3, rue de Varembé
CH-1211 Geneva 20
Switzerland

Tel.: +41 22 919 02 11
info@iec.ch
www.iec.ch

**About the IEC**
The International Electrotechnical Commission (IEC) is the leading global organization that prepares and publishes International Standards for all electrical, electronic and related technologies.

**About IEC publications**
The technical content of IEC publications is kept under constant review by the IEC. Please make sure that you have the latest edition, a corrigendum or an amendment might have been published.

**IEC publications search - webstore.iec.ch/advsearchform**
The advanced search enables to find IEC publications by a variety of criteria (reference number, text, technical committee, …). It also gives information on projects, replaced and withdrawn publications.

**IEC Just Published - webstore.iec.ch/justpublished**
Stay up to date on all new IEC publications. Just Published details all new publications released. Available online and once a month by email.

**IEC Customer Service Centre - webstore.iec.ch/csc**
If you wish to give us your feedback on this publication or need further assistance, please contact the Customer Service Centre: sales@iec.ch.

**IEC Products & Services Portal - products.iec.ch**
Discover our powerful search engine and read freely all the publications previews. With a subscription you will always have access to up to date content tailored to your needs.

**Electropedia - www.electropedia.org**
The world's leading online dictionary on electrotechnology, containing more than 22 300 terminological entries in English and French, with equivalent terms in 19 additional languages. Also known as the International Electrotechnical Vocabulary (IEV) online.

Documents
Document Sharing Hub

Full document details: IEC 61675-1 2022 RLV

# IEC 61675-1

Edition 3.0 2022-03
REDLINE VERSION

# INTERNATIONAL STANDARD

colour inside

## Radionuclide imaging devices – Characteristics and test conditions – Part 1: Positron emission tomographs

INTERNATIONAL
ELECTROTECHNICAL
COMMISSION

ICS 11.040.50

ISBN 978-2-8322-1092-0

**Warning! Make sure that you obtained this publication from an authorized distributor.**

® Registered trademark of the International Electrotechnical Commission

Documents
Document Sharing Hub

Full document details: IEC 61675-1 2022 RLV

CONTENTS

FOREWORD ..... 4
INTRODUCTION ..... 2
1 Scope ..... 7
2 Normative references ..... 7
3 Terms and definitions ..... 7
4 Test methods ..... 13
4.1 General ..... 13
4.2 SPATIAL RESOLUTION ..... 13
4.2.1 General ..... 13
4.2.2 Purpose ..... 14
4.2.3 Method ..... 14
4.2.4 Analysis ..... 15
4.2.5 Report ..... 19
4.3 Tomographic sensitivity ..... 20
4.3.1 General ..... 20
4.3.2 Purpose ..... 20
4.3.3 Method ..... 20
4.3.4 Analysis ..... 22
4.3.5 Report ..... 22
~~4.4 Uniformity ..... 22~~
4.4 Scatter measurement ..... 22
4.4.1 General ..... 23
4.4.2 Purpose ..... 23
4.4.3 Method ..... 23
4.4.4 Analysis ..... 24
4.4.5 Report ..... 26
4.5 PET COUNT RATE PERFORMANCE ..... 26
4.5.1 General ..... 26
4.5.2 Purpose ..... 26
4.5.3 Method ..... 26
4.5.4 Analysis ..... 28
4.5.5 Report ..... 30
4.6 Time-of-flight resolution ..... 31
4.6.1 General ..... 31
4.6.2 Purpose ..... 31
4.6.3 Method ..... 31
4.6.4 Radionuclide, source distribution and data collection ..... 31
4.6.5 Data processing ..... 31
4.6.6 Analysis ..... 32
4.6.7 Scatter and random removal ..... 33
4.6.8 FWHM analysis ..... 34
4.6.9 Report ..... 34
4.7 Image quality and quantification accuracy of source ACTIVITY concentrations and PET/CT registration accuracy ..... 34
4.7.1 General ..... 34
4.7.2 Purpose ..... 34

AVA Documents
Document Sharing Hub
Full document details: IEC 61675-1 2022 RLV

4.7.3 Method ... 34
4.7.4 Data analysis ... 40
4.7.5 Report ... 44
5 ACCOMPANYING DOCUMENTS ... 45
5.1 General ... 45
5.2 Design parameters and configuration ... 45
5.3 SPATIAL RESOLUTION ... 45
5.4 Sensitivity ... 46
5.5 SCATTER FRACTION ... 46
5.6 COUNT RATE performance ... 46
5.7 TIME-OF-FLIGHT resolution ... 46
5.8 Image quality and quantification accuracy of source ACTIVITY concentrations ... 46
Bibliography ... 47
Index of defined terms ... 48

Figure 1 – Evaluation of FWHM ... 17
Figure 2 – Evaluation of EQUIVALENT WIDTH (*EW*) ... 19
Figure 3 – Scatter phantom configuration and position on the imaging bed ... 21
Figure 4 – Evaluation of SCATTER FRACTION ... 25
Figure 5 – Determination of LOR distance from line source ... 32
Figure 6 – Cross-section of body phantom ... 35
Figure 7 – Phantom insert with hollow spheres ... 36
Figure 8 – Image quality phantom and scatter phantom position for whole body scan acquisition ... 38
Figure 9 – Placement of ROIs in the phantom background ... 41

Documents
Document Sharing Hub
Full document details: IEC 61675-1 2022 RLV

INTERNATIONAL ELECTROTECHNICAL COMMISSION

# RADIONUCLIDE IMAGING DEVICES – CHARACTERISTICS AND TEST CONDITIONS –

## Part 1: Positron emission tomographs

## FOREWORD

1) The International Electrotechnical Commission (IEC) is a worldwide organization for standardization comprising all national electrotechnical committees (IEC National Committees). The object of IEC is to promote international co-operation on all questions concerning standardization in the electrical and electronic fields. To this end and in addition to other activities, IEC publishes International Standards, Technical Specifications, Technical Reports, Publicly Available Specifications (PAS) and Guides (hereafter referred to as "IEC Publication(s)"). Their preparation is entrusted to technical committees; any IEC National Committee interested in the subject dealt with may participate in this preparatory work. International, governmental and non-governmental organizations liaising with the IEC also participate in this preparation. IEC collaborates closely with the International Organization for Standardization (ISO) in accordance with conditions determined by agreement between the two organizations.
2) The formal decisions or agreements of IEC on technical matters express, as nearly as possible, an international consensus of opinion on the relevant subjects since each technical committee has representation from all interested IEC National Committees.
3) IEC Publications have the form of recommendations for international use and are accepted by IEC National Committees in that sense. While all reasonable efforts are made to ensure that the technical content of IEC Publications is accurate, IEC cannot be held responsible for the way in which they are used or for any misinterpretation by any end user.
4) In order to promote international uniformity, IEC National Committees undertake to apply IEC Publications transparently to the maximum extent possible in their national and regional publications. Any divergence between any IEC Publication and the corresponding national or regional publication shall be clearly indicated in the latter.
5) IEC itself does not provide any attestation of conformity. Independent certification bodies provide conformity assessment services and, in some areas, access to IEC marks of conformity. IEC is not responsible for any services carried out by independent certification bodies.
6) All users should ensure that they have the latest edition of this publication.
7) No liability shall attach to IEC or its directors, employees, servants or agents including individual experts and members of its technical committees and IEC National Committees for any personal injury, property damage or other damage of any nature whatsoever, whether direct or indirect, or for costs (including legal fees) and expenses arising out of the publication, use of, or reliance upon, this IEC Publication or any other IEC Publications.
8) Attention is drawn to the Normative references cited in this publication. Use of the referenced publications is indispensable for the correct application of this publication.
9) Attention is drawn to the possibility that some of the elements of this IEC Publication may be the subject of patent rights. IEC shall not be held responsible for identifying any or all such patent rights.

**This redline version of the official IEC Standard allows the user to identify the changes made to the previous edition IEC 61675-1:2013. A vertical bar appears in the margin wherever a change has been made. Additions are in green text, deletions are in strikethrough red text.**

Documents
Document Sharing Hub

Full document details: IEC 61675-1 2022 RLV

IEC 61675-1 has been prepared by subcommittee 62C: Equipment for radiotherapy, nuclear medicine and radiation dosimetry, of IEC technical committee 62: Electrical equipment in medical practice. It is an International Standard.

This third edition cancels and replaces the second edition published in 2013. This edition constitutes a technical revision.

This edition includes the following significant technical change with respect to the previous edition: requirements have been changed or newly created regarding the technical aspects of SPATIAL RESOLUTION, sensitivity measurement, SCATTER FRACTION, COUNT RATE performance, image quality, PET/CT registration accuracy and time-of-flight resolution.

The text of this International Standard is based on the following documents:

| Draft | Report on voting |
|---|---|
| 62C/811/CDV | 62C/828/RVC |

Full information on the voting for its approval can be found in the report on voting indicated in the above table.

The language used for the development of this International Standard is English.

In this document, the following print types are used: terms defined in Clause 3 of this document or as noted: small capitals.

This document was drafted in accordance with ISO/IEC Directives, Part 2, and developed in accordance with ISO/IEC Directives, Part 1 and ISO/IEC Directives, IEC Supplement, available at www.iec.ch/members_experts/refdocs. The main document types developed by IEC are described in greater detail at www.iec.ch/standardsdev/publications.

A list of all parts in the IEC 61675 series, published under the general title *Radionuclide imaging devices – Characteristics and test conditions*, can be found on the IEC website.

The committee has decided that the contents of this document will remain unchanged until the stability date indicated on the IEC website under webstore.iec.ch in the data related to the specific document. At this date, the document will be

- reconfirmed,
- withdrawn,
- replaced by a revised edition, or
- amended.

**IMPORTANT – The "colour inside" logo on the cover page of this document indicates that it contains colours which are considered to be useful for the correct understanding of its contents. Users should therefore print this document using a colour printer.**

Documents
Document Sharing Hub

Full document details: IEC 61675-1 2022 RLV

# INTRODUCTION

Further developments of POSITRON EMISSION TOMOGRAPHS allow most of the tomographs to be operated in fully 3D acquisition mode. To comply with this trend, this document describes test conditions in accordance with this acquisition characteristic. In addition, today a POSITRON EMISSION TOMOGRAPH often includes X-RAY EQUIPMENT for COMPUTED TOMOGRAPHY (CT). For this document, PET-CT hybrid devices are considered to be state of the art, dedicated POSITRON EMISSION TOMOGRAPHS not including the X-ray component being special cases only.

While the test methods specified herein are optimized for the PET component of PET-CT hybrid devices, they may also be used for the PET component of PET-MR hybrid devices.

The test methods specified in this document have been selected to reflect as much as possible the clinical use of POSITRON EMISSION TOMOGRAPHS. It is intended that the tests be carried out by MANUFACTURERS, thereby enabling them to declare the characteristics of POSITRON EMISSION TOMOGRAPHS in the ACCOMPANYING DOCUMENTS. This document does not indicate which tests will be performed by the MANUFACTURER on an individual tomograph or which class-standards may be used to characterize the performance of POSITRON EMISSION TOMOGRAPHS by the MANUFACTURER.

Documents
Document Sharing Hub

Full document details: IEC 61675-1 2022 RLV

# RADIONUCLIDE IMAGING DEVICES – CHARACTERISTICS AND TEST CONDITIONS –

## Part 1: Positron emission tomographs

## 1 Scope

This part of IEC 61675 specifies terminology and test methods for declaring the characteristics of POSITRON EMISSION TOMOGRAPHS. POSITRON EMISSION TOMOGRAPHS detect the ANNIHILATION RADIATION of positron emitting RADIONUCLIDES by COINCIDENCE DETECTION.

~~No test has been specified to characterize the uniformity of reconstructed images, because all methods known so far will mostly reflect the noise in the image.~~

## 2 Normative references

The following documents are referred to in the text in such a way that some or all of their content constitutes requirements of this document. For dated references, only the edition cited applies. For undated references, the latest edition of the referenced document (including any amendments) applies.

IEC TR 60788:2004, *Medical electrical equipment – Glossary of defined terms*

## 3 Terms and definitions

For the purposes of this document, the terms and definitions given in IEC TR 60788:2004 and the following apply.

ISO and IEC maintain terminological databases for use in standardization at the following addresses:

- IEC Electropedia: available at http://www.electropedia.org/
- ISO Online browsing platform: available at http://www.iso.org/obp

**3.1**
**tomography**
radiography of one or more layers within an object

[SOURCE: IEC TR 60788:2004, rm-41-15]

~~**3.1.1**~~
~~**transverse tomography**~~
~~TOMOGRAPHY that slices a three-dimensional object into a stack of OBJECT SLICES which are considered as being two-dimensional and independent from each other and at which the IMAGE PLANES are perpendicular to the SYSTEM AXIS~~

**3.1.1**
**emission computed tomography**
**ECT**
imaging method for the representation of the spatial distribution of incorporated RADIONUCLIDES in selected two-dimensional slices through the object

Documents
Document Sharing Hub
Full document details: IEC 61675-1 2022 RLV

**3.1.1.1**
**projection**
transformation of a three-dimensional object into its two-dimensional image or of a two-dimensional object into its one-dimensional image, by integrating the physical property which determines the image along the direction of the PROJECTION BEAM

Note 1 to entry: This process is mathematically described by line integrals in the direction of PROJECTION (along the LINE OF RESPONSE) and called "Radon transform".

**3.1.1.2**
**projection beam**
beam that determines the smallest possible volume in which the physical property which determines the image is integrated during the measurement process

Note 1 to entry: The PROJECTION BEAM's shape is limited by SPATIAL RESOLUTION in all three dimensions.

Note 2 to entry: The PROJECTION BEAM mostly has the shape of a long thin cylinder or cone. In POSITRON EMISSION TOMOGRAPHY, it is the sensitive volume between two detector elements operated in coincidence.

**3.1.1.3**
**projection angle**
angle at which the PROJECTION is measured or acquired

**3.1.1.4**
**sinogram**
two-dimensional display of all one-dimensional PROJECTIONS of an OBJECT SLICE, as a function of the PROJECTION ANGLE

Note 1 to entry: The PROJECTION ANGLE is displayed on the ordinate, and the linear projection coordinate is displayed on the abscissa.

**3.1.1.5**
**object slice**
physical property that corresponds to a slice in the object and that determines the measured information and which is displayed in the tomographic image

**3.1.1.6**
**image plane**
plane assigned to a plane in the OBJECT SLICE

Note 1 to entry: Usually, the IMAGE PLANE is the midplane of the corresponding OBJECT SLICE.

**3.1.1.7**
**system axis**
axis of symmetry, characterized by geometrical and physical properties of the arrangement of the system

Note 1 to entry: For a circular POSITRON EMISSION TOMOGRAPH, the SYSTEM AXIS is the axis through the centre of the detector ring. For tomographs with rotating detectors, it is the axis of rotation.

**3.1.1.8**
**tomographic volume**
juxtaposition of all volume elements which contribute to the measured PROJECTIONS for all PROJECTION ANGLES

**3.1.1.8.1**
**transverse field of view**
dimensions of a slice through the TOMOGRAPHIC VOLUME, perpendicular to the SYSTEM AXIS

Note 1 to entry: For a circular TRANSVERSE FIELD OF VIEW, it is described by its diameter.

Documents
Document Sharing Hub
Full document details: IEC 61675-1 2022 RLV

Note 2 to entry: For non-cylindrical TOMOGRAPHIC VOLUMES, the TRANSVERSE FIELD OF VIEW may depend on the axial position of the slice.

**3.1.1.8.2**
**axial field of view**
**AFOV**
field which is characterized by dimensions of a slice through the TOMOGRAPHIC VOLUME, parallel to and including the SYSTEM AXIS

Note 1 to entry: In practice, the AXIAL FIELD OF VIEW is specified only by its axial dimension, given by the distance between the centre of the outmost defined IMAGE PLANEs plus the average of the measured AXIAL RESOLUTION.

**3.1.1.8.3**
**total field of view**
field which is characterized by dimensions (three-dimensional) of the TOMOGRAPHIC VOLUME

**3.1.2**
**positron emission tomography**
**PET**
EMISSION COMPUTED TOMOGRAPHY utilizing the ANNIHILATION RADIATION of positron emitting RADIONUCLIDES by COINCIDENCE DETECTION

**3.1.2.1**
**positron emission tomograph**
tomographic device, which detects the ANNIHILATION RADIATION of positron emitting RADIONUCLIDES by COINCIDENCE DETECTION

**3.1.2.2**
**annihilation radiation**
ionizing radiation that is produced when a particle and its antiparticle interact and cease to exist

**3.1.2.3**
**coincidence detection**
method which checks whether two opposing detectors have detected one photon each simultaneously

Note 1 to entry: By this method, the two photons are concatenated into one event.

Note 2 to entry: The COINCIDENCE DETECTION between two opposing detector elements serves as an electronic collimation to define the corresponding PROJECTION BEAM or LINE OF RESPONSE (LOR), respectively.

**3.1.2.4**
**coincidence window**
time interval during which two detected photons are considered being simultaneous

**3.1.2.5**
**line of response**
**LOR**
axis of the PROJECTION BEAM

Note 1 to entry: In PET, the LINE OF RESPONSE is the line connecting the centres of two opposing detector elements operated in coincidence.

**3.1.2.6**
**total coincidences**
sum of all coincidences detected

**3.1.2.6.1**
**true coincidence**
result of COINCIDENCE DETECTION of two gamma events originating from the same positron annihilation

AVA Documents
Document Sharing Hub

Full document details: IEC 61675-1 2022 RLV

**3.1.2.6.2**
**scattered true coincidence**
TRUE COINCIDENCE where at least one participating photon was scattered before the COINCIDENCE DETECTION

**3.1.2.6.3**
**unscattered true coincidence**
the difference between TRUE COINCIDENCES and SCATTERED TRUE COINCIDENCES

**3.1.2.6.4**
**random coincidence**
result of a COINCIDENCE DETECTION in which participating photons do not originate from the same positron annihilation.

**3.1.2.7**
**singles rate**
COUNT RATE measured without COINCIDENCE DETECTION, but with energy discrimination

**3.1.3**
**two-dimensional reconstruction**
image reconstruction at which data are rebinned prior to reconstruction into SINOGRAMS, which are the PROJECTION data of transverse slices, which are considered being independent of each other and being perpendicular to the SYSTEM AXIS

**3.1.4**
**three-dimensional reconstruction**
image reconstruction at which the LINES OF RESPONSE are not restricted to being perpendicular to the SYSTEM AXIS so that a LINE OF RESPONSE may pass several transverse slices

**3.2**
**image matrix**
<nuclear medicine> matrix in which each element corresponds to the measured or calculated physical property of the object at the location described by the coordinates of this MATRIX ELEMENT

**3.2.1**
**matrix element**
smallest unit of an IMAGE MATRIX, which is assigned in location and size to a certain volume element of the object (VOXEL)

**3.2.2**
**pixel**
MATRIX ELEMENT in a two-dimensional IMAGE MATRIX

~~**3.2.1.2**~~
~~**trixel**~~
~~MATRIX ELEMENT in a three-dimensional IMAGE MATRIX~~

**3.2.3**
**voxel**
volume element in the object which is assigned to a MATRIX ELEMENT in a two- or three-dimensional IMAGE MATRIX

Note 1 to entry: The dimensions of the VOXEL are determined by the dimensions of the corresponding MATRIX ELEMENT via the appropriate scale factors and by the systems SPATIAL RESOLUTION in all three dimensions.

Documents
Document Sharing Hub
Full document details: IEC 61675-1 2022 RLV

**3.3**
**point spread function**
**PSF**
scintigraphic image of a POINT SOURCE

**3.3.1**
**physical point spread function**
<tomographs> two-dimensional POINT SPREAD FUNCTION in planes perpendicular to the PROJECTION BEAM at specified distances from the detector

Note 1 to entry: The PHYSICAL POINT SPREAD FUNCTION characterizes the purely physical (intrinsic) imaging performance of the tomographic device and is independent of for example sampling, image reconstruction and image processing. A PROJECTION BEAM is characterized by the entirety of all PHYSICAL POINT SPREAD FUNCTIONs as a function of distance along its axis.

**3.3.2**
**axial point spread function**
profile passing through the peak of the PHYSICAL POINT SPREAD FUNCTION in a plane parallel to the SYSTEM AXIS

**3.3.3**
**transverse point spread function**
reconstructed two-dimensional POINT SPREAD FUNCTION in a tomographic IMAGE PLANE

Note 1 to entry: In TOMOGRAPHY, the TRANSVERSE POINT SPREAD FUNCTION can also be obtained from a LINE SOURCE located parallel to the SYSTEM AXIS.

**3.4**
**spatial resolution**
<nuclear medicine> ability to concentrate the count density distribution in the image of a POINT SOURCE to a point

**3.4.1**
**transverse resolution**
SPATIAL RESOLUTION in a reconstructed plane perpendicular to the SYSTEM AXIS

**3.4.1.1**
**radial resolution**
TRANSVERSE RESOLUTION along a line passing through the position of the source and the SYSTEM AXIS

**3.4.1.2**
**tangential resolution**
TRANSVERSE RESOLUTION in the direction orthogonal to the direction of RADIAL RESOLUTION

**3.4.2**
**axial resolution**
SPATIAL RESOLUTION along a line parallel to the SYSTEM AXIS

Note 1 to entry: AXIAL RESOLUTION only applies for tomographs with sufficiently fine axial sampling fulfilling the sampling theorem.

**3.4.3**
**equivalent width**
**EW**
width of that rectangle having the same area and the same height as the response function, e.g., the POINT SPREAD FUNCTION

Note 1 to entry: EW better reflects scatter tails of the response function than FWHM or FWTM.

[SOURCE: IEC TR 60788:2004, rm-34-45, modified – Note to entry added.]

Documents
Document Sharing Hub
Full document details: IEC 61675-1 2022 RLV

**3.4.4**
**full width at half maximum**
**FWHM**
for a bell-shaped curve, distance parallel to the abscissa axis between the points where the ordinate has half of its maximum value

[SOURCE: IEC TR 60788:2004, rm-73-02]

**3.5**
**recovery coefficient**
measured (image) ACTIVITY concentration of an active volume divided by the true ACTIVITY concentration of that volume, neglecting ACTIVITY calibration factors

Note 1 to entry: For the actual measurement, the true ACTIVITY concentration is replaced by the measured ACTIVITY concentration in a large volume.

**3.6**
**slice sensitivity**
ratio of COUNT RATE as measured on the SINOGRAM to the ACTIVITY concentration in the phantom

Note 1 to entry: In PET, the measured counts are numerically corrected for scatter by subtracting the SCATTER FRACTION.

**3.7**
**volume sensitivity**
sum of the individual SLICE SENSITIVITIES

**3.8**
**count rate characteristic**
function giving the relationship between observed COUNT RATE and TRUE COUNT RATE

[SOURCE: IEC TR 60788:2004, rm-34-21]

**3.8.1**
**count loss**
difference between measured COUNT RATE and TRUE COUNT RATE, which is caused by the finite RESOLVING TIME of the instrument

**3.8.2**
**count rate**
number of counts per unit of time

**3.8.3**
**true count rate**
COUNT RATE that would be observed if the RESOLVING TIME of the device were zero

[SOURCE: IEC TR 60788:2004, rm-34-20]

**3.9**
**scatter fraction**
**SF**
ratio between SCATTERED TRUE COINCIDENCES and the sum of SCATTERED plus UNSCATTERED TRUE COINCIDENCES for a given experimental set-up

**3.10**
**point source**
RADIOACTIVE SOURCE approximating a $\delta$-function in all three dimensions

Documents
Document Sharing Hub
Full document details: IEC 61675-1 2022 RLV

**3.11**
**line source**
straight RADIOACTIVE SOURCE approximating a $\delta$-function in two dimensions and being constant (uniform) in the third dimension

**3.12**
**calibration**
<emission computed tomography> process to establish the relation between COUNT RATE per volume element locally in the image and the corresponding ACTIVITY concentration in the object for object sizes not requiring RECOVERY CORRECTION

Note 1 to entry: In order to have this CALIBRATION fairly independent of the object under study, the application of proper corrections to the data, e.g., ATTENUATION, scatter, COUNT LOSS, radioactive decay, detector normalization, RANDOM COINCIDENCES (PET), and branching ratio (PET) is mandatory. The independency of the object is required to scale clinical images in terms of kBq/ml or standardized uptake values (SUV).

**3.13**
**PET count rate performance**
relationship between the measured COUNT RATE of TRUE COINCIDENCES, RANDOM COINCIDENCES, TOTAL COINCIDENCES, and noise equivalent count rate versus ACTIVITY

**3.14**
**time-of-flight resolution**
**TOF resolution**
uncertainty of the measurement of the difference of the arrival time of the two photons from the same annihilation event

## 4 Test methods

### 4.1 General

For all measurements, the acquisition parameters of the tomograph shall be set up according to its normal mode of operation, i.e., it ~~shall~~ is not ~~be~~ adjusted specially for the measurement of specific parameters. If the tomograph is specified to operate in different modes influencing the performance parameters, for example with different axial acceptance angles, ~~with and without septa,~~ with TWO-DIMENSIONAL RECONSTRUCTION and THREE-DIMENSIONAL RECONSTRUCTION, the test results shall be reported for every mode of operation. The tomograph configuration (e.g. energy thresholds, axial acceptance angle, reconstruction algorithm) shall be chosen according to the MANUFACTURER's recommendation and clearly stated. If any test cannot be carried out exactly as specified in this document, the reason for the deviation and the exact conditions under which the test was performed shall be stated clearly.

It is postulated that a POSITRON EMISSION TOMOGRAPH is capable ~~of measuring~~ to estimate RANDOM COINCIDENCES and ~~performing~~ to perform the appropriate correction. In addition, a POSITRON EMISSION TOMOGRAPH ~~shall provide~~ provides corrections for scatter, ATTENUATION, COUNT LOSS, branching ratio, radioactive decay, and CALIBRATION.

The test phantoms shall be centred within the tomograph's AXIAL FIELD OF VIEW, if not specified otherwise.

### 4.2 SPATIAL RESOLUTION

#### 4.2.1 General

SPATIAL RESOLUTION measurements describe partly the ability of a tomograph to reproduce the spatial distribution of a tracer in an object in a reconstructed image. The measurement ~~is~~ shall be performed by imaging POINT SOURCES in air and reconstructing images, using a sharp reconstruction filter. Although this does not represent the condition of imaging a PATIENT, where tissue scatter is present and limited statistics require the use of a smooth reconstruction filter

AVA Documents
Document Sharing Hub
Full document details: IEC 61675-1 2022 RLV

and/or iterative reconstruction methods, the measured SPATIAL RESOLUTION provides an objective comparison between tomographs.

### 4.2.2 Purpose

The purpose of this measurement is to characterize the ability of the tomograph to recover small objects.

The ~~TRANSVERSE~~ SPATIAL RESOLUTION ~~is~~ shall be characterized by the width of the reconstructed TRANSVERSE POINT SPREAD FUNCTIONS of radioactive POINT SOURCES. The width of the point spread function ~~is~~ shall be measured by the FULL WIDTH AT HALF MAXIMUM (FWHM) and the EQUIVALENT WIDTH (EW).

~~The AXIAL RESOLUTION is defined for tomographs with sufficiently fine axial sampling (volume detectors) and could be measured with a stationary POINT SOURCE. These systems (fulfilling the sampling theorem in the axial direction) are characterized by the fact that the AXIAL POINT SPREAD FUNCTION of a stationary POINT SOURCE would not vary if the position of the source is varied in the axial direction for half the axial sampling distance.~~

### 4.2.3 Method

#### 4.2.3.1 General

For all systems, the SPATIAL RESOLUTION shall be measured in the transverse IMAGE PLANE in two directions (i.e., radially and tangentially) and in the axial direction. ~~In addition, for those systems having sufficiently fine axial sampling, the AXIAL RESOLUTION also shall be measured.~~

~~The TRANSVERSE FIELD OF VIEW and the IMAGE MATRIX size determine the PIXEL size in the transverse IMAGE PLANE. In order to measure accurately the width of the spread function, its FWHM should span at least 5 PIXELS.~~

~~For volume imaging systems, the TRIXEL size, in both the transverse and axial dimensions, should be made close to one fifth of the expected FWHM,~~

#### 4.2.3.2 RADIONUCLIDE

The RADIONUCLIDE for the measurement shall be $^{18}$F or $^{22}$Na, with an ACTIVITY such that the percent COUNT LOSS is less than 5 % or the RANDOM COINCIDENCE rate is less than 5 % of the TOTAL COINCIDENCE rate.

#### 4.2.3.3 RADIOACTIVE SOURCE distribution

##### 4.2.3.3.1 General

POINT SOURCES shall be used with the largest dimension less than or equal to 1 mm.

##### 4.2.3.3.2 Source positioning

~~Tomographs shall use~~ POINT SOURCES, suspended in air, shall be used to minimize scatter, for measurements of TRANSVERSE RESOLUTION. Resolution measurements shall be made on two planes perpendicular to the LONG AXIS of the tomograph, one at the centre of the AXIAL FIELD OF VIEW and the second on a plane offset from the central plane by 3/8 of the AXIAL FIELD OF VIEW (i.e., one-eighth of the AXIAL FIELD OF VIEW from the end of the tomograph). On each plane, sources shall be positioned at 1 cm, 10 cm, and 20 cm from the SYSTEM AXIS (the 20 cm location ~~shall~~ may be omitted if it is not covered by the TRANSVERSE FIELD OF VIEW). The sources shall be positioned on either the horizontal or vertical line intersecting the SYSTEM AXIS, so that the radial and tangential directions are aligned with the image grid.

AVA Documents Document Sharing Hub

Full document details: IEC 61675-1 2022 RLV

#### 4.2.3.4 Data collection

Data shall be collected for all sources in ~~all~~ each of the six positions specified in 4.2.3.3.2, either singly or in groups of multiple sources, to minimize the data acquisition time. At least 100 000 counts for each POINT SOURCE shall be acquired.

#### 4.2.3.5 Data processing

Filtered backprojection reconstruction using a ramp filter with the cutoff at the Nyquist frequency of the PROJECTION data or its 3D equivalent shall be employed for all SPATIAL RESOLUTION data. No resolution enhancement methods shall be used. The pixel size in the transverse plane shall be chosen to allow at least 3 pixels per FWHM.

Results obtained using alternate reconstruction algorithms may be reported in addition to the filtered backprojection results, provided that the alternate reconstruction methods and their parameters are described in sufficient detail to reproduce the study results.

### 4.2.4 Analysis

The RADIAL RESOLUTION and the TANGENTIAL RESOLUTION shall be determined by forming one-dimensional response functions. These response functions ~~are~~ shall be created by taking profiles from the TRANSVERSE POINT SPREAD FUNCTION through the reconstructed 3D-image of each POINT SOURCE in radial and tangential directions passing through the peak of the distribution. The width of each profile shall be two times the expected FWHM in both directions perpendicular to the direction of the analysis.

The AXIAL RESOLUTION of the POINT SOURCE measurements ~~is~~ shall be determined by forming one-dimensional response functions (AXIAL POINT SPREAD FUNCTIONS), which result from taking profiles through the reconstructed 3D-image in the axial direction passing through the peak of the distribution. The width of each profile shall be two times the expected FWHM in both directions perpendicular to the direction of the analysis.

Each FWHM shall be determined by linear interpolation between adjacent PIXELS at half the maximum PIXEL value, which is the peak of the response function (see Figure 1). The maximum PIXEL value $C_m$ shall be determined by a parabolic fit using the peak point and its two nearest neighbours. Values shall be converted to millimetre units by multiplication with the appropriate PIXEL width.

Documents
Document Sharing Hub
Full document details: IEC 61675-1 2022 RLV

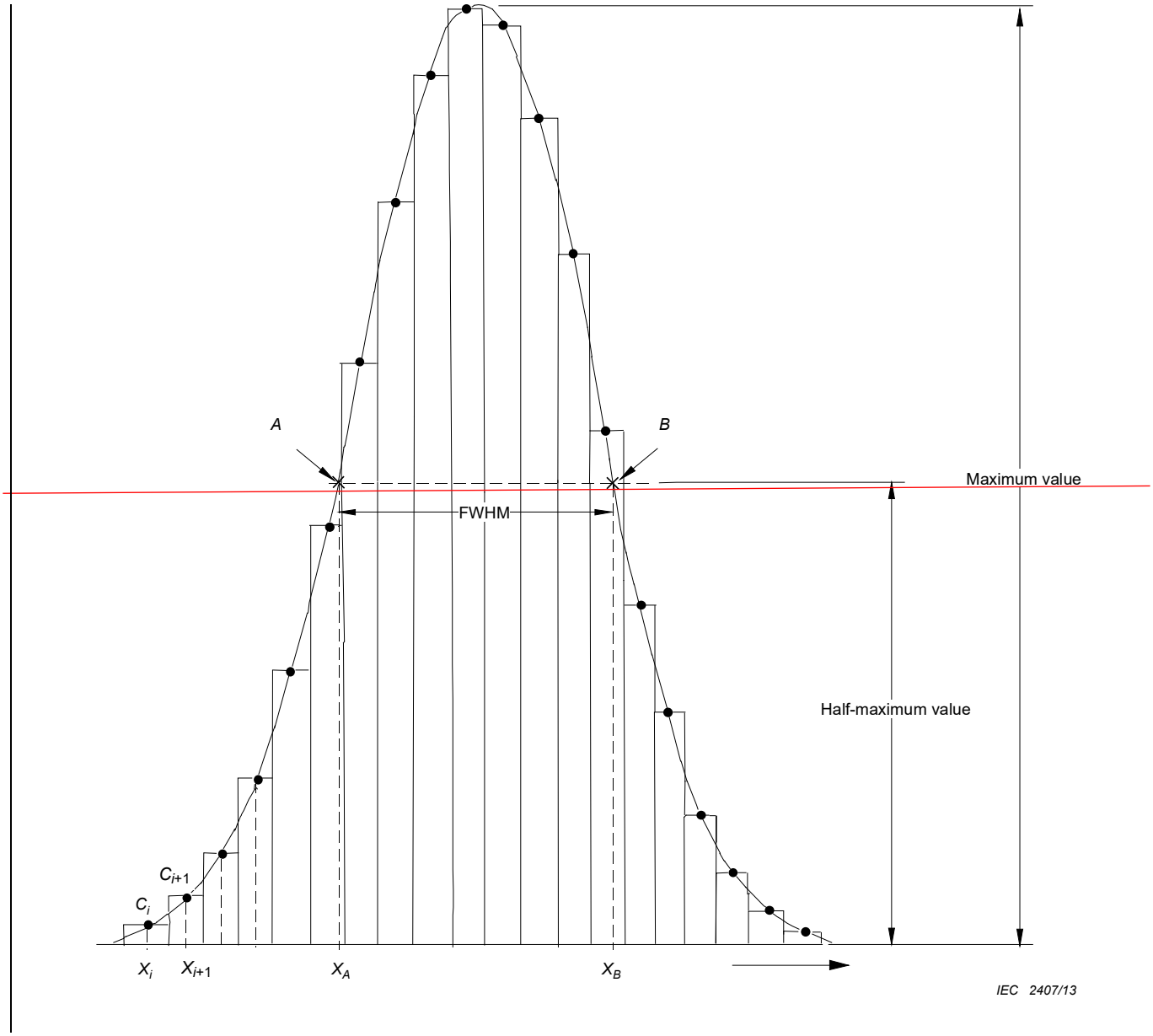


Documents
Document Sharing Hub
Full document details: IEC 61675-1 2022 RLV

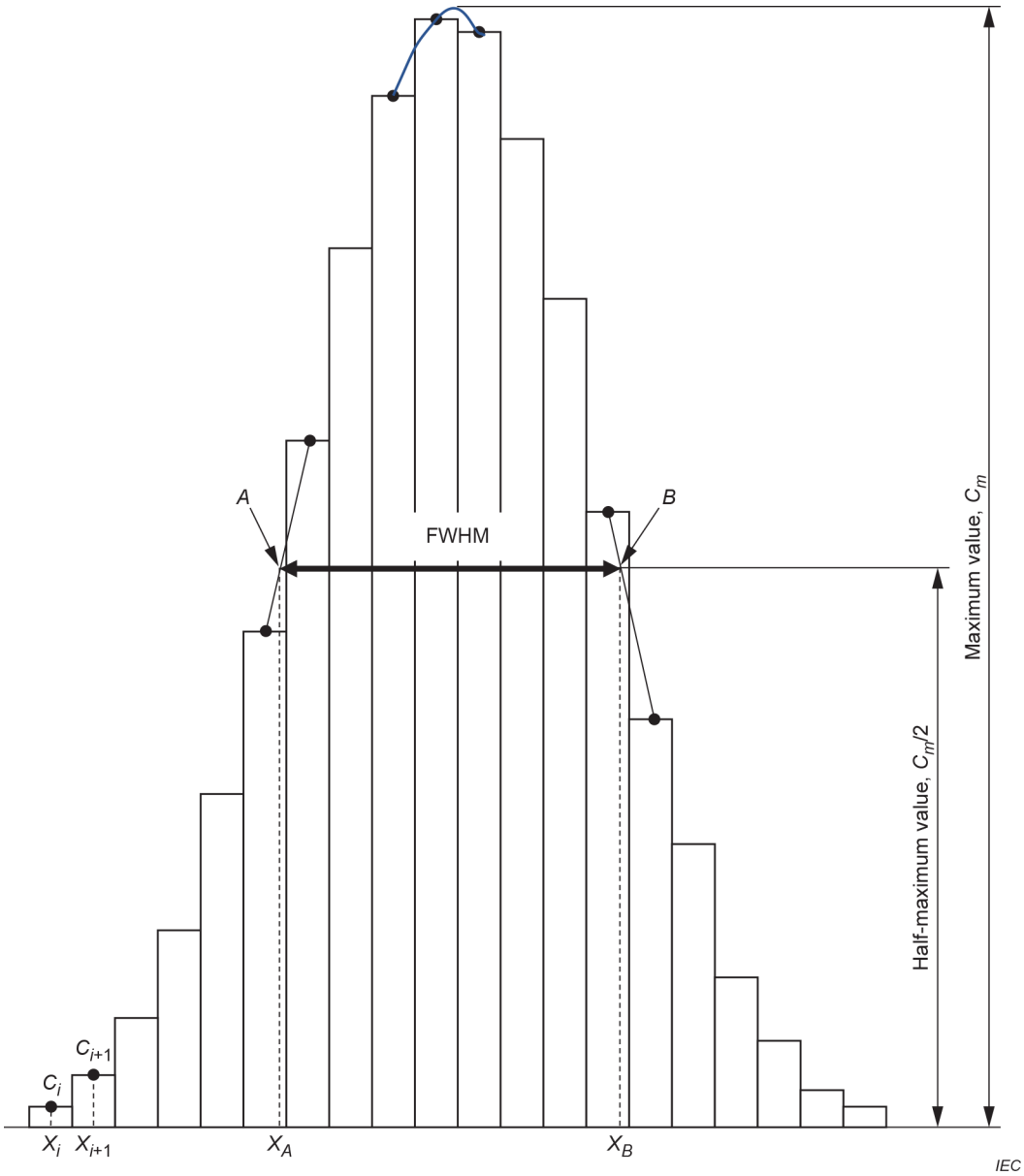


NOTE $C_m$ is the maximum value of the interpolation curve, *A* and *B* are the points where the interpolation count curve cuts the line of half-maximum value. Then $FWHM = X_B - X_A$.

**Figure 1 – Evaluation of FWHM**

Each EQUIVALENT WIDTH (*EW*) shall be measured from the corresponding response function. *EW* ~~is~~ shall be calculated from Formula (1):

Documents
Document Sharing Hub
Full document details: IEC 61675-1 2022 RLV

$$EW = \sum_i \frac{C_i \, x PW}{C_m} \qquad EW = \frac{PW}{C_m} \sum_i C_i \tag{1}$$

where

$\sum C_i$ $\sum_i C_i$ is the sum of the counts in the profile between the limits defined by 1/20 $C_m$ on either side of the peak;

$C_m$ is the maximum PIXEL value of the profile as determined in the FWHM calculation above, as opposed to the maximum pixel value among the pixel locations;

$PW$ is the PIXEL width in millimetres (see Figure 2).

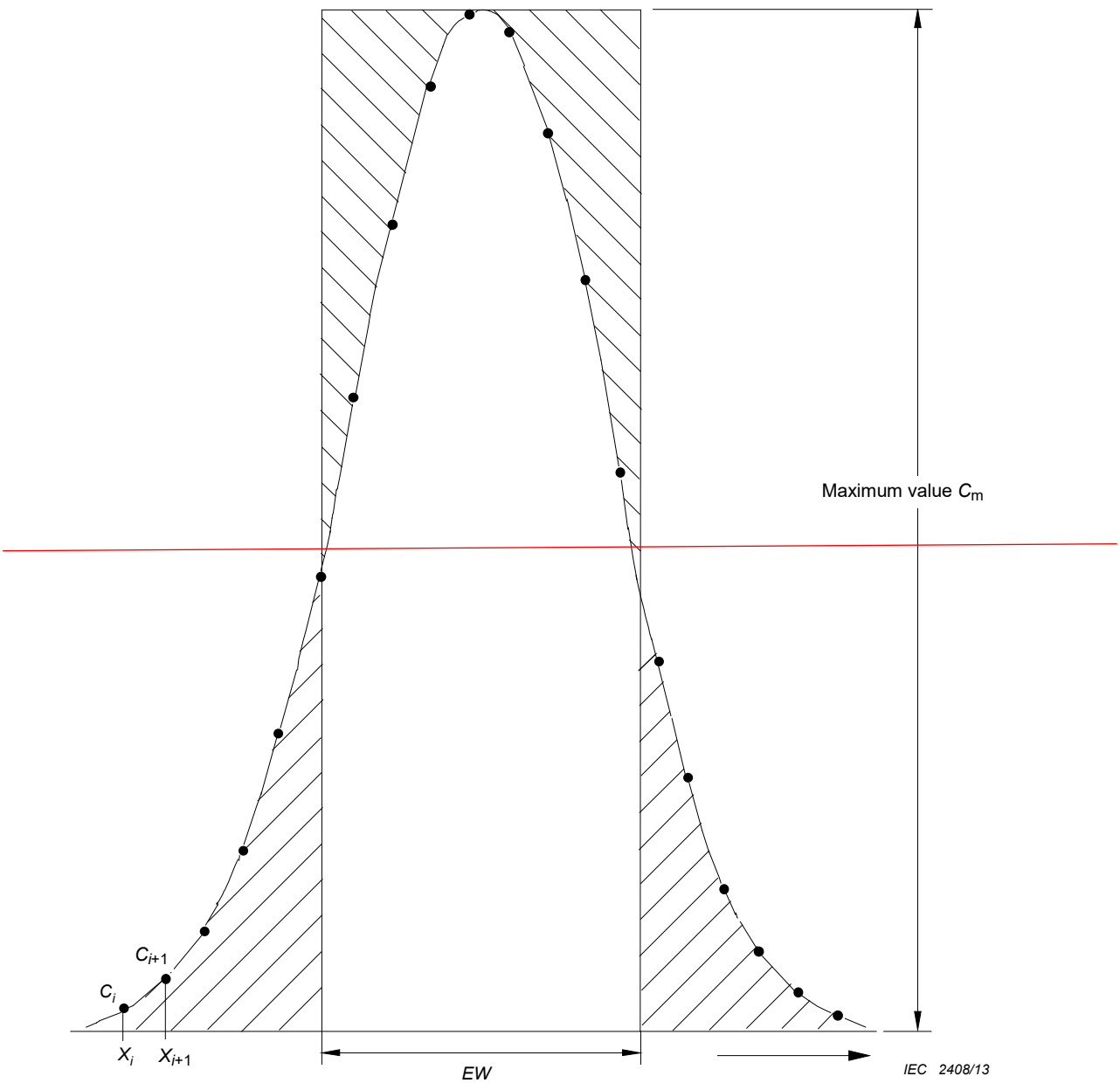


Documents
Document Sharing Hub
Full document details: IEC 61675-1 2022 RLV

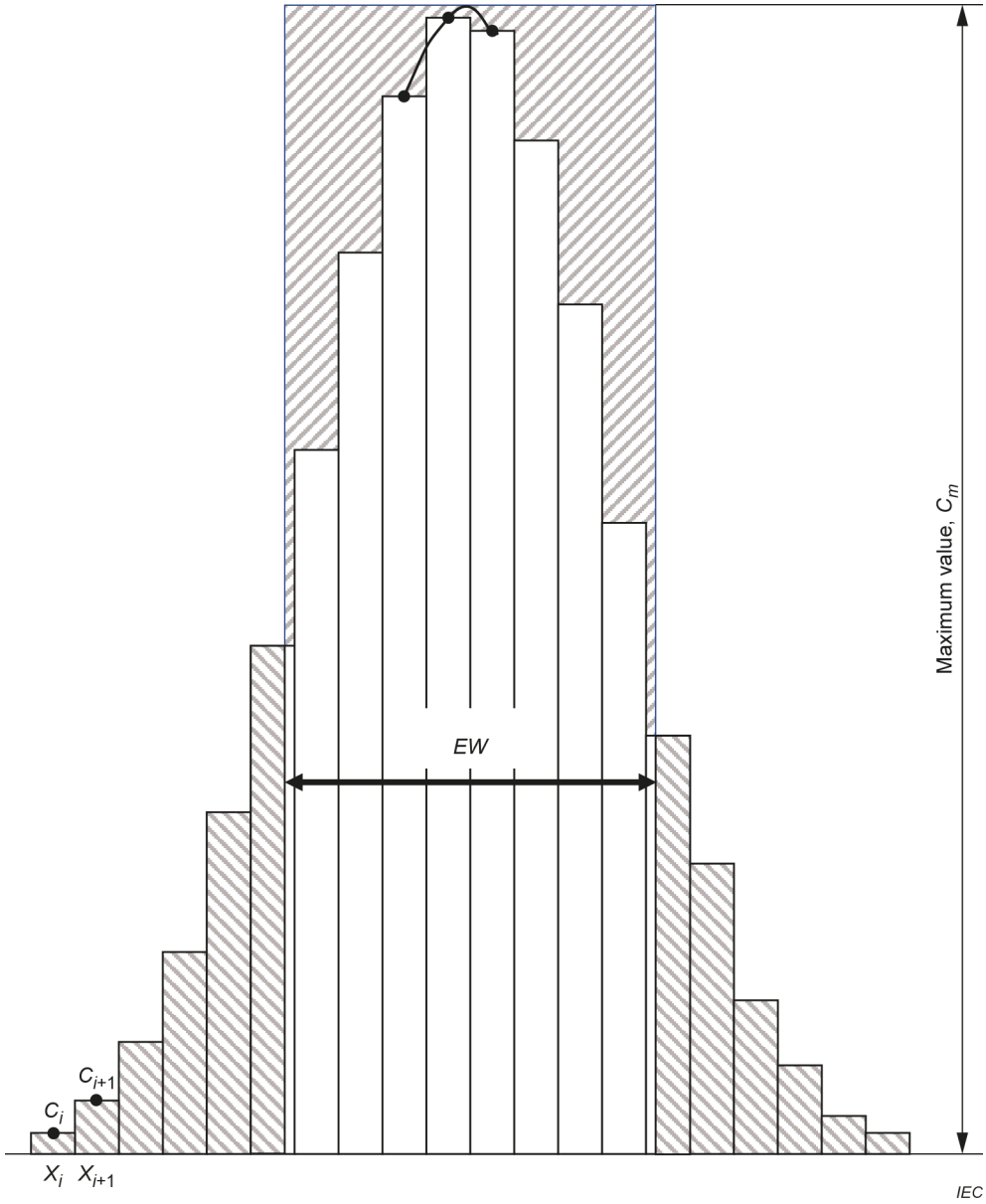


NOTE *EW* is given by the width of that rectangle having the area of the LINE SPREAD FUNCTION and its maximum value $C_m$.

$$EW = \Sigma(C_i \times PW)/C_m$$

The PIXEL width *PW* is $x_{i+1} - x_i$.

The areas shaded differently are equal.

**Figure 2 – Evaluation of EQUIVALENT WIDTH (*EW*)**

### 4.2.5 Report

RADIAL RESOLUTION, TANGENTIAL RESOLUTION, and AXIAL RESOLUTION (*FWHM* and *EW*) for each POINT SOURCE position shall be calculated and reported. Transverse and axial PIXEL dimensions shall be reported.

If special reconstruction methods were used, the results of the tests ~~should~~ shall be reported together with the exact description of the methodology.

Documents
Document Sharing Hub
Full document details: IEC 61675-1 2022 RLV

## 4.3 Tomographic sensitivity

### 4.3.1 General

Tomographic sensitivity is a parameter that characterizes the rate at which coincidence events are detected in the presence of a RADIOACTIVE SOURCE in the limit of low ACTIVITY where COUNT LOSSES and RANDOM COINCIDENCES are negligible. The measured rate of TRUE COINCIDENCES for a given distribution of the RADIOACTIVE SOURCE depends upon many factors, including the detector material, size, and packing fraction, tomograph ring diameter, axial acceptance window and septa geometry, ATTENUATION, scatter, dead-time, and energy thresholds.

### 4.3.2 Purpose

The purpose of this measurement is to determine the detected rate of UNSCATTERED TRUE COINCIDENCES per unit of ACTIVITY concentration for a standard volume source, i.e., a cylindrical phantom of given dimensions.

### 4.3.3 Method

#### 4.3.3.1 General

The tomographic sensitivity test places a specified volume of radioactive solution of known ACTIVITY ~~concentration~~ in the TOTAL FIELD OF VIEW of the POSITRON EMISSION TOMOGRAPH and observes the resulting COUNT RATE. The system's sensitivity ~~is~~ shall be calculated from these values. The test is critically dependent upon accurate assays of ACTIVITY as measured in a dose calibrator or well counter. It is difficult to maintain an absolute CALIBRATION with such devices to accuracies finer than 10 %. Absolute reference standards using positron emitters should be considered if higher degrees of accuracy are required.

~~The last frame of the PET COUNT RATE PERFORMANCE test (4.6) can also be used to determine the SLICE SENSITIVITY and VOLUME SENSITIVITY.~~

One of the later frames of the PET COUNT RATE PERFORMANCE test (4.5) can be used to determine the SLICE SENSITIVITY and VOLUME SENSITIVITY if the RADIONUCLIDE used for these measurements is $^{18}$F.

#### 4.3.3.2 RADIONUCLIDE

The RADIONUCLIDE used for these measurements shall be $^{18}$F. The amount of ACTIVITY ~~used~~ at the time of the tomographic sensitivity measurement shall be such that the percentage of COUNT LOSSES is less than 2 %.

#### 4.3.3.3 RADIOACTIVE SOURCE distribution

The test phantom ~~is~~ shall be a solid right circular cylinder composed of polyethylene with a specific density of (0,96 ± 0,01) g/cm$^3$, with an outside diameter of (203 ± 3) mm, and with an overall length of (700 ± 5) mm. A (6,5 ± 0,3) mm hole is drilled parallel to the central axis of the cylinder, at a radial distance of (45 ± 1) mm. For ease of fabrication and handling, the cylinder may consist of several segments that are assembled together during testing. However, in both design and assembly of the completed phantom ~~one must insure a tight fit between~~, adjacent segments shall be fit tightly together, as even very small gaps will allow narrow axial regions of scatter-free radiation.

The test phantom LINE SOURCE insert ~~is~~ shall be a clear polyethylene or polyethylene coated plastic tube (800 ± 5) mm in length, with an inside diameter of (3,2 ± 0,2) mm and an outside diameter of (4,8 ± 0,2) mm.

The test phantom LINE SOURCE insert shall be filled with water well mixed with the measured amount of ACTIVITY to a length of (700 ± 5) mm and sealed at both ends. This LINE SOURCE shall be inserted into the hole of the test phantom such that the ACTIVITY of the LINE SOURCE matches

Documents
Document Sharing Hub
Full document details: IEC 61675-1 2022 RLV

the length of the polyethylene phantom. The test phantom with LINE SOURCE ~~is~~ shall be mounted on the standard patient bed supplied by the MANUFACTURER. The phantom shall be raised (5 ± 0,5) cm above the patient bed, using a mounting means such as foam blocks placed outside the AXIAL FIELD OF VIEW, and rotated such that the LINE SOURCE insert is positioned nearest to the patient bed (see Figure 3). ~~The phantom shall be centred in the TRANSVERSE FIELD OF VIEW and to within 5 mm or if the phantom cannot be centred in the TRANSVERSE FIELD OF VIEW by elevation of the patient bed alone, additional mounting means as foam blocks placed outside the AXIAL FIELD OF VIEW can be used. In this case the actual mounting means and the actual table elevation shall be reported.~~ The patient bed shall be positioned (15,2 ± 0,5) cm below the centre of the TRANSVERSE FIELD OF VIEW, so that the phantom is centred in the TRANSVERSE FIELD OF VIEW.

If the phantom cannot be centred as described above, then mounting blocks of other dimensions may be used to centre the phantom in the transverse field of view. The distance of the table from the centre of the transverse field of view shall be reported.

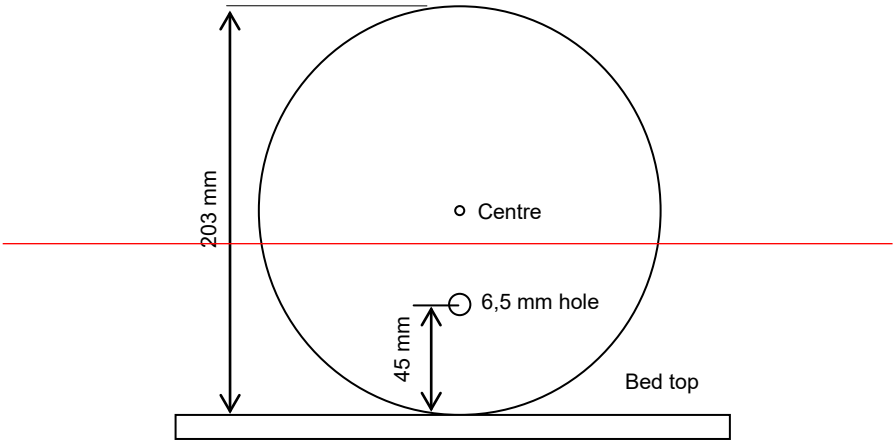


IEC 2409/13

Dimensions in millimetres

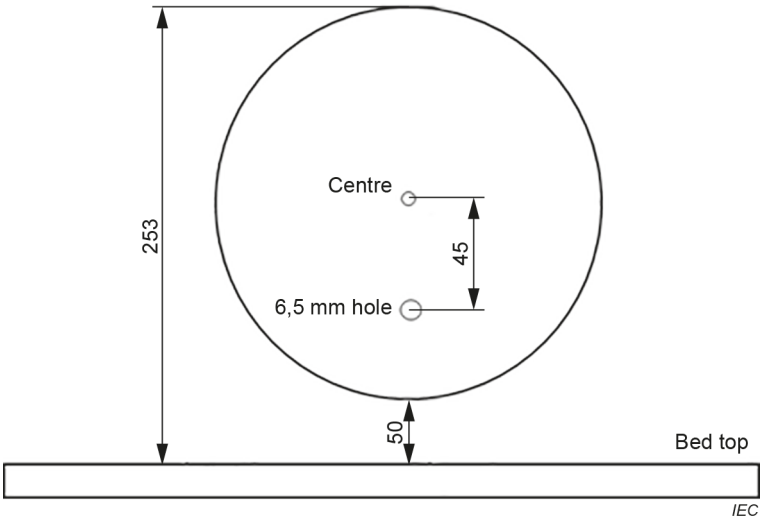


IEC

NOTE The 6,5 mm hole is for insertion of the LINE SOURCE.

**Figure 3 – Scatter phantom configuration and position on the imaging bed**

Documents
Document Sharing Hub
Full document details: IEC 61675-1 2022 RLV

#### 4.3.3.4 Data collection

Each coincident event between individual detectors shall be taken into account only once. Data ~~shall be~~ are assembled into SINOGRAMS. All events shall be assigned to the transverse slice passing the midpoint of the corresponding LINE OF RESPONSE.

At least 500 000 true coincident counts ~~shall be~~ are acquired.

#### 4.3.3.5 Data processing

The ACTIVITY concentration in the phantom shall be corrected for decay to determine the average ACTIVITY concentration, $a_{ave}$, during the data acquisition time, $T_{acq}$, by the following Formula (2):

$$a_{\mathrm{ave}} = \frac{A_{\mathrm{cal}}}{V}\frac{1}{\ln 2}\frac{T_{1/2}}{T_{\mathrm{acq}}}\exp\left[\frac{T_{\mathrm{cal}} - T_0}{T_{1/2}}\ln 2\right]\left[1 - \exp\left(-\frac{T_{\mathrm{acq}}}{T_{1/2}}\ln 2\right)\right] \tag{2}$$

where

$V$ is the nominal volume of the test phantom (22 700 cm$^3$);

$A_{\mathrm{cal}}$ is the ACTIVITY times branching ratio ("positron activity") measured at time $T_{\mathrm{cal}}$;

$T_0$ is the acquisition start time;

$T_{1/2}$ is the RADIOACTIVE HALF-LIFE of the RADIONUCLIDE.

No corrections for detector normalization, COUNT LOSS, SCATTERED TRUE COINCIDENCES, and ATTENUATION shall be applied. The data shall be corrected for RANDOM COINCIDENCES.

### 4.3.4 Analysis

All PIXELS in the SINOGRAM located further than 25 cm from the SYSTEM AXIS shall be set to zero.

The total counts $C_{i,\mathrm{tot}}$ on each slice $i$ shall be obtained by summing all PIXELS in the corresponding SINOGRAM. The SLICE SENSITIVITY $S_i$ for unscattered events shall be found by the following Formula (3):

$$S_i = \frac{C_{i,\mathrm{tot}}}{T_{\mathrm{acq}}}\frac{(1 - SF_i)}{a_{\mathrm{ave}}} \tag{3}$$

where

$SF_i$ is the corresponding SCATTER FRACTION (see 4.4).

The VOLUME SENSITIVITY, $S_{\mathrm{tot}}$, shall be the sum of $S_i$ over all slices of the tomograph within the AXIAL FIELD OF VIEW.

### 4.3.5 Report

~~For each slice $i$, report the values of $S_i$. The VOLUME SENSITIVITY $S_{\mathrm{tot}}$ shall also be reported.~~

The VOLUME SENSITIVITY $S_{\mathrm{tot}}$ shall be reported. A graph of SLICE SENSITIVITY $S_i$ values shall be reported.

Documents
Document Sharing Hub
Full document details: IEC 61675-1 2022 RLV

~~4.4 Uniformity~~

~~No test has been specified to characterize the uniformity of reconstructed images, because all methods known so far will mostly reflect the noise in the image.~~

## 4.4 Scatter measurement

### 4.4.1 General

The scattering of ~~primary gamma rays~~ photons created in the annihilation of positrons results in coincidence events with false information for radiation source localization. Variations in design and implementation cause POSITRON EMISSION TOMOGRAPHS to have different sensitivities to scattered radiation.

### 4.4.2 Purpose

The purpose of this procedure is to measure the relative system sensitivity to scattered radiation, expressed by the SCATTER FRACTION (*SF*), as well as the values of the SCATTER FRACTION in each slice $SF_j$.

### 4.4.3 Method

#### 4.4.3.1 General

The test phantom ~~is~~ shall be a solid right circular cylinder composed of polyethylene with a specific density of (0,96 ± 0,01) g/cm$^3$, with an outside diameter of (203 ± 3) mm, and with an overall length of (700 ± 5) mm. A (6,5 ± 0,3) mm hole ~~is~~ shall be drilled parallel to the central axis of the cylinder, at a radial distance of (45 ± 1) mm. For ease of fabrication and handling, the cylinder may consist of several segments that ~~are~~ shall be assembled together during testing. However, in both design and assembly of the completed phantom ~~one shall insure a tight fit between~~, adjacent segments shall fit tightly together, as even very small gaps will allow narrow axial regions of scatter-free radiation.

~~The last frame of the COUNT RATE CHARACTERISTIC test (4.6) may be used to determine the SCATTER FRACTION if the test is performed with $^{18}$F.~~

One of the later frames of the PET COUNT RATE PERFORMANCE test (4.5) may be used to determine the SCATTER FRACTION.

#### 4.4.3.2 RADIONUCLIDE

The RADIONUCLIDE for the measurement shall be $^{18}$F or $^{11}$C with an ACTIVITY such that the percentage of COUNT LOSSES is less than 5 %.

#### 4.4.3.3 RADIOACTIVE SOURCE distribution

The test phantom LINE SOURCE insert ~~is~~ shall be a clear polyethylene or polyethylene coated plastic tube (800 ± 5) mm in length, with an inside diameter of (3,2 ± 0,2) mm and an outside diameter of (4,8 ± 0,2) mm. This tube ~~will~~ shall be filled with a known quantity of ACTIVITY and threaded through the 6,5 mm hole in the test phantom.

The test phantom LINE SOURCE insert shall be filled with water well mixed with the measured amount of ACTIVITY to a length of (700 ± 5) mm and sealed at both ends. This LINE SOURCE shall be inserted into the hole of the test phantom such that the ACTIVITY of the LINE SOURCE matches the length of the polyethylene phantom. ~~The test phantom with LINE SOURCE is mounted on the standard patient bed supplied by the MANUFACTURER and rotated such that the LINE SOURCE insert is positioned nearest to the patient bed (see Figure 3). The phantom shall be centred in the TRANSVERSE FIELD OF VIEW and AXIAL FIELD OF VIEW to within 5 mm or if the phantom cannot be centred in the TRANSVERSE FIELD OF VIEW by elevation of the patient bed alone, additional~~

AVA Documents
Document Sharing Hub

~~mounting means as foam blocks placed outside the AXIAL FIELD OF VIEW can be used. In this case the actual mounting means and the actual table elevation shall be reported.~~

The test phantom with LINE SOURCE shall be mounted on the standard patient bed supplied by the MANUFACTURER. The phantom shall be raised (5 ± 0,5) cm above the patient bed, using a mounting means such as foam blocks placed outside the AXIAL FIELD OF VIEW, and shall be rotated such that the LINE SOURCE insert is positioned nearest to the patient bed (see Figure 3). The phantom shall be centred in the TRANSVERSE FIELD OF VIEW by raising or lowering the bed.

If the phantom cannot be centred as described above, then mounting blocks of other dimensions may be used to centre the phantom in the transverse field of view. The distance of the table from the centre of the transverse field of view shall be reported.

#### 4.4.3.4 Data collection

Each coincident event between individual detectors shall be taken into account only once. Data shall be assembled into SINOGRAMS. All events ~~will~~ shall be assigned to the slice at the midpoint of the corresponding LINE OF RESPONSE. The acquisition ~~should~~ shall contain a minimum of 500 000 true coincident counts.

#### 4.4.3.5 Data processing

No corrections for variations in detector sensitivity, SCATTERED TRUE COINCIDENCES, COUNT LOSS, or ATTENUATION shall be applied to the measurements.

The data shall be corrected for RANDOM COINCIDENCES.

### 4.4.4 Analysis

For tomographs with an AXIAL FIELD OF VIEW of 65 cm or less, SINOGRAMS of TRUE COINCIDENCES shall be generated for each acquisition *i* of slice *j*. For tomographs with an AXIAL FIELD OF VIEW greater than 65 cm, SINOGRAMS of TRUE COINCIDENCES shall be generated for each acquisition for slices within the central 65 cm.

Oblique SINOGRAMS ~~are~~ shall be collapsed into a single SINOGRAM for each respective slice (by single-slice rebinning) while conserving the number of counts in the SINOGRAM.

The SINOGRAM *j* of TRUE COINCIDENCES shall be processed as follows.

a) All PIXELS located further than 25 cm from the SYSTEM AXIS shall be set to zero.

b) For each PROJECTION ANGLE $\phi$ within the SINOGRAM, the location of the centre of the LINE SOURCE response shall be determined by finding the PIXEL having the greatest value. Each PROJECTION shall be shifted so that the PIXEL containing the maximum value is aligned with the central PIXEL of the SINOGRAM.

c) After alignment, a sum projection shall be produced. A PIXEL in the sum projection ~~is~~ shall be the sum of the PIXELS in each angular PROJECTION having the same radial offset as the PIXEL in the sum projection.

d) The counts $C_{L,j}$ and $C_{R,j}$, the left and right PIXEL intensities at the edges of the strip with a width of ± 20 mm from the centre of the profile calculated in (b), shall be obtained (see Figure 4). Linear interpolation shall be employed to find $C_{L,j}$ and $C_{R,j}$.

Documents
Document Sharing Hub
Full document details: IEC 61675-1 2022 RLV

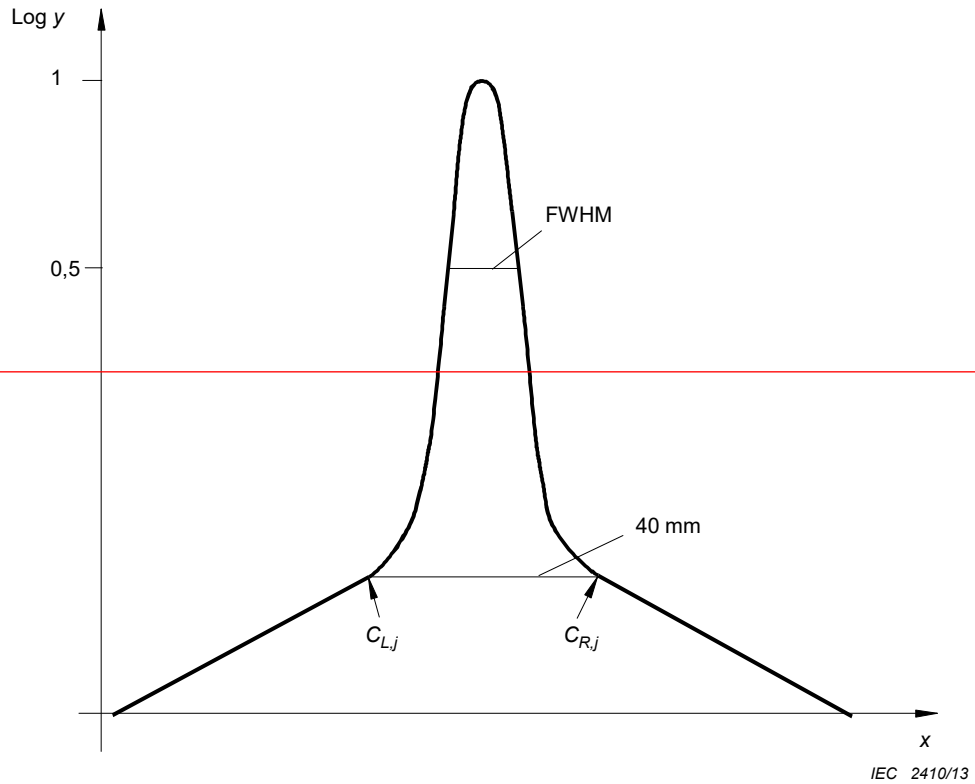


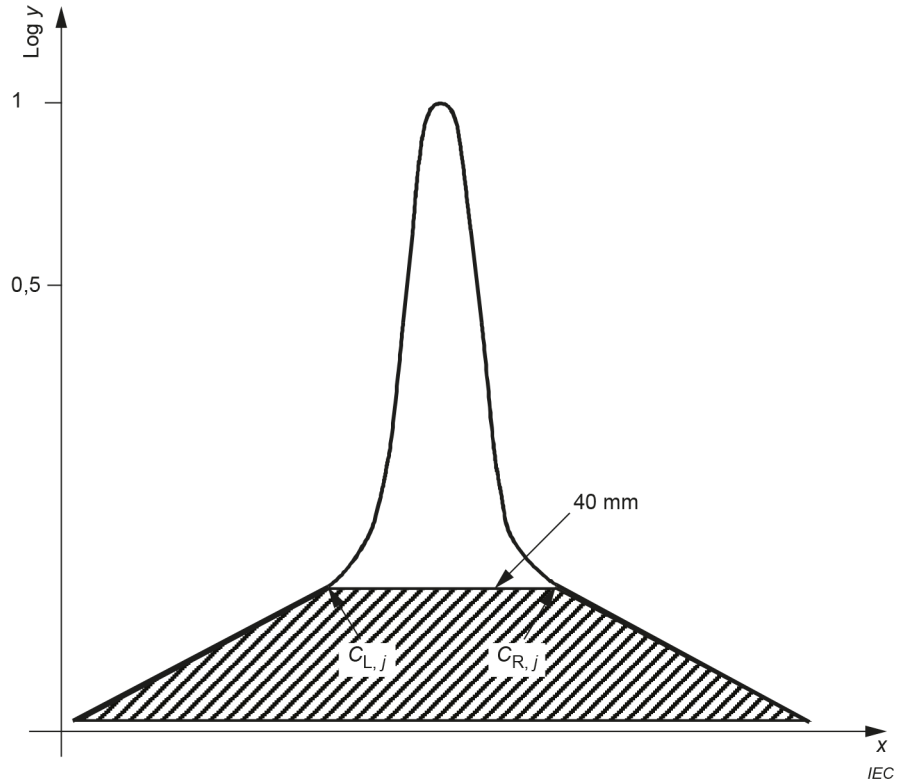


~~NOTE~~ In the summed projection, the scatter ~~is~~ shall be estimated by the counts outside the 40 mm wide strip plus the area ~~of the LSF~~ below the line $C_{L,j} - C_{R,j}$.

**Figure 4 – Evaluation of SCATTER FRACTION**

e) The average of the two PIXEL intensities $C_{L,j}$ and $C_{R,j}$ shall be multiplied by the number of PIXELS, including fractional values, corresponding to the width of the strip, and the product

AVA Documents Document Sharing Hub

shall be added to the sum of counts in the PIXELs outside the strip, to yield the number of scatter counts $C_{s,j}$ for the slice $j$.

f) The TRUE COINCIDENCES $C_{TOT,j}$ shall be computed as the sum of all counts in the sum projection for slice $j$. The TRUE COINCIDENCES include SCATTERED TRUE COINCIDENCES and UNSCATTERED TRUE COINCIDENCES.

The SCATTER FRACTION $SF_j$ for each slice shall be calculated as shown in Formula (4):

$$SF_j = \frac{C_{s,j}}{C_{TOT,j}} \tag{4}$$

The SCATTER FRACTION $SF$ shall be computed by Formula (5):

$$SF = \frac{\sum_j C_{s,j}}{\sum_j C_{TOT,j}} \tag{5}$$

### 4.4.5 Report

~~For each slice $j$ that was processed, $SF_j$ shall be reported (Equation (4)). The SCATTER FRACTION $SF$ shall also be reported (Equation (5)).~~

The SCATTER FRACTION $SF$ shall be reported (Formula (5)). A graph of $SF_j$ values shall be reported (calculated from Formula (4)).

## 4.5 PET COUNT RATE PERFORMANCE

### 4.5.1 General

PET COUNT RATE PERFORMANCE depends in a complex manner on the spatial distribution of ACTIVITY and scattering materials, on the trues-to-singles ratio, on the COUNT RATE CHARACTERISTIC of the SINGLES RATE, and on the setup of the measurement conditions. In addition, COUNT RATE performance is strongly influenced by the amount of RANDOM COINCIDENCES and by the accuracy of the subtraction of these events.

### 4.5.2 Purpose

The procedure described here is designed to evaluate deviations from the linear relationship between COUNT RATE of TRUE COINCIDENCES and ACTIVITY, caused by COUNT LOSSES. As modern PET tomographs are operated with COUNT LOSS correction schemes, the accuracy of these correction algorithms ~~shall~~ is also ~~be~~ tested.

### 4.5.3 Method

#### 4.5.3.1 General

The test phantom ~~is~~ shall be a solid right circular cylinder composed of polyethylene with a specific density of (0,96 ± 0,01) g/cm$^3$, with an outside diameter of (203 ± 3) mm, and with an overall length of (700 ± 5) mm. A (6,5 ± 0,3) mm hole is drilled parallel to the central axis of the cylinder, at a radial distance of (45 ± 1) mm. For ease of fabrication and handling, the cylinder may consist of several segments that ~~are~~ shall be assembled together during testing. However, in both design and assembly of the completed phantom, one ~~must insure~~ shall ensure a tight fit between adjacent segments, as even very small gaps will allow narrow axial regions of scatter-free radiation.

AVA Documents Document Sharing Hub

Full document details: IEC 61675-1 2022 RLV

#### 4.5.3.2 RADIONUCLIDE and ACTIVITY ~~$^{18}$F~~

The RADIONUCLIDE for the measurement shall be $^{18}$F or $^{11}$C. The variation of ACTIVITY ~~is~~ shall be obtained by radioactive decay ~~over approximately 10 HALF LIVES~~. The last frame shall be acquired with a COUNT LOSS of less than 1 %. The initial amount of ACTIVITY shall be high enough to allow for the following two rates to be measured:

a) $R_{t,max}$ – maximum COUNT RATE of TRUE COINCIDENCES;

b) $R_{NEC,max}$ – maximum noise equivalent count rate.

Recommendations for the initial ACTIVITY required to meet these objectives ~~should~~ shall be supplied by the MANUFACTURER.

#### 4.5.3.3 RADIOACTIVE SOURCE distribution

The test phantom LINE SOURCE insert ~~is~~ shall be a clear polyethylene or polyethylene coated plastic tube (800 ± 5) mm in length, with an inside diameter of (3,2 ± 0,2) mm and an outside diameter of (4,8 ± 0,2) mm. This tube shall be filled with a known quantity of ACTIVITY and threaded through the 6,5 mm hole in the test phantom.

The test phantom LINE SOURCE insert shall be filled with water well mixed with the measured amount of ACTIVITY to a length of (700 ± 5) mm and sealed at both ends. ~~This LINE SOURCE shall be inserted into the hole of the test phantom such that the ACTIVITY of the LINE SOURCE matches the length of the polyethylene phantom.~~ The test phantom with LINE SOURCE ~~is~~ shall be mounted on the standard patient bed supplied by the MANUFACTURER. The phantom shall be raised (5 ± 0,5) cm above the patient bed, using a mounting means such as foam blocks placed outside the AXIAL FIELD OF VIEW, and shall be rotated such that the LINE SOURCE insert is positioned nearest to the patient bed (see Figure 3). The phantom shall be centred in the TRANSVERSE FIELD OF VIEW ~~and the AXIAL FIELD OF VIEW to within 5 mm or if the phantom cannot be centred in the TRANSVERSE FIELD OF VIEW by elevation of the patient bed alone, additional mounting means such as foam blocks placed outside the AXIAL FIELD OF VIEW can be used~~ by raising or lowering the bed. ~~In this case the actual mounting means and the actual table elevation shall be reported.~~

If the phantom cannot be centred as described above, then mounting blocks of other dimensions may be used to centre the phantom in the transverse field of view. The distance of the table from the centre of the transverse field of view shall be reported.

~~To begin the test, a source of relatively high ACTIVITY is~~ The test phantom shall be placed in the field of view of the POSITRON EMISSION TOMOGRAPH. Regular measurements (at least two per RADIOACTIVE HALF-LIFE) ~~are~~ shall then be taken while the ACTIVITY in the phantom decays over several RADIOACTIVE HALF-LIVES. A decrease in the event rate accompanies the ACTIVITY decay. In addition, the efficiency of the system in processing coincident events improves as the ACTIVITY decays, until COUNT LOSSES may be effectively neglected. Thus, by waiting long enough, one obtains a measurement of the COUNT RATE of TRUE COINCIDENCES that is effectively free from processing losses. By extrapolating this COUNT RATE of TRUE COINCIDENCES back to higher ACTIVITY levels and comparing it to the COUNT RATE of TRUE COINCIDENCES measured at these higher ACTIVITY levels, one may estimate COUNT LOSSES suffered by the system at higher ACTIVITY levels. The accuracy of this technique depends critically on adequate statistics being gathered at sufficiently low levels of ACTIVITY. This may require repeated measurements at the lower COUNT RATES. Recommendations for the acquisition protocol required to meet these objectives shall be supplied by the MANUFACTURER.

#### 4.5.3.4 DATA COLLECTION

Each coincident event between individual detectors shall be taken into account only once.

If the data are also to be used to calculate TOF RESOLUTION for 4.6, then the data shall be acquired in TOF acquisition mode.

AVA Documents Document Sharing Hub

Full document details: IEC 61675-1 2022 RLV

### 4.5.4 Analysis

#### 4.5.4.1 Test of the PET COUNT RATE PERFORMANCE

##### 4.5.4.1.1 General

Data shall be assembled into SINOGRAMS. All events ~~will~~ shall be assigned to the slice at the midpoint of the corresponding LINE OF RESPONSE.

No corrections for variations in detector sensitivity, scatter, COUNT LOSS, or ATTENUATION shall be applied to the measurements.

For tomographs with an AXIAL FIELD OF VIEW of 65 cm or less, SINOGRAMS of TRUE COINCIDENCES shall be generated for each acquisition *i* of slice *j*. For tomographs with an AXIAL FIELD OF VIEW greater than 65 cm, SINOGRAMS of TRUE COINCIDENCES shall be generated for each acquisition for slices within the central 65 cm.

##### 4.5.4.1.2 Test

The relationship between COUNT RATE and ACTIVITY within the TOTAL FIELD OF VIEW of the tomograph shall be measured. The time per frame shall be less than one-half of the RADIOACTIVE HALF-LIFE with the exception of the last three frames, which ~~can~~ may be longer. For each of these last three frames, a minimum of 500 000 true coincident counts shall be acquired.

The initial ACTIVITY in the phantom shall be determined from the ACTIVITY injected into the phantom as measured in a calibrated dose calibrator.

The average of the decaying ACTIVITY, $A_{\mathrm{ave},i}$, during the data acquisition interval for time frame *i*, $T_{\mathrm{acq},i}$, shall be determined by the following Formula (6):

$$A_{\mathrm{ave},i} = A_{\mathrm{cal}} \frac{1}{\ln 2} \frac{T_{1/2}}{T_{\mathrm{acq},i}} \exp\left[\frac{T_{\mathrm{cal}} - T_{0,i}}{T_{1/2}} \ln 2\right]\left[1 - \exp\left(-\frac{T_{\mathrm{acq},i}}{T_{1/2}} \ln 2\right)\right] \tag{6}$$

where

$A_{\mathrm{cal}}$ is the ACTIVITY times branching ratio ("positron activity") measured at time $T_{\mathrm{cal}}$;

$T_{0,i}$ is the acquisition start-time of the time frame *i*;

$T_{1/2}$ is the RADIOACTIVE HALF-LIFE of $^{18}$F or $^{11}$C, respectively.

The SINOGRAMS shall be analysed without COUNT LOSS correction. All PIXELS in the acquired SINOGRAM and in the corresponding randoms estimate SINOGRAMS located further than 25 cm from the SYSTEM AXIS shall be set to zero.

~~For each time frame *i*, compute:~~

~~a) the total event rate $R_{\mathrm{TOT},i,j}$ for each slice *j*, i.e. the number of TOTAL COINCIDENCES in slice *j* divided by the acquisition time for frame *i*.~~

~~b) the random event rate $R_{\mathrm{r},i,j}$ for each slice *j*, i.e. the number of RANDOM COINCIDENCES in slice *j* divided by the acquisition time for frame *i*.~~

~~c) the true event rate $R_{\mathrm{t},i,j}$ for each slice *j*, i.e. the number of TRUE COINCIDENCES in slice *j* divided by the acquisition time for frame *i*.~~

~~d) the noise equivalent count rate $R_{\mathrm{NEC},i,j}$ for each slice *j* (equation (7)):~~

Documents
Document Sharing Hub
Full document details: IEC 61675-1 2022 RLV

$$R_{\mathrm{NEC},i,j} = \frac{(1-SF_j)^2 R_{\mathrm{t},i,j}^2}{R_{\mathrm{TOT},i,j} + R_{\mathrm{r},i,j}} \quad (7)$$

NOTE For this evaluation the NEC formula (Equation (7)) accounts for randoms and scatter corrections, and does not account for other effects like time of flight.

Total system COUNT RATES $R_{\mathrm{TOT},i}$, $R_{\mathrm{t},i}$, $R_{\mathrm{r},i}$, *and* $R_{\mathrm{NEC},i}$ are computed as the sum of the corresponding slice COUNT RATES over all slices *j*.

For each time frame *i*, the total counts acquired, $N_{\mathrm{TOT},I}$, and the total randoms estimated, $N_{\mathrm{r},I}$, shall be computed as the sum of the remaining data.

For each time frame *i*, $R_{\mathrm{TOT},i}$, $R_{\mathrm{r},i}$, *and* $R_{\mathrm{t},i}$ shall be computed:

a) $R_{\mathrm{TOT},i} = N_{\mathrm{TOT},i} / T_i$

b) $R_{\mathrm{r},i,} = N_{\mathrm{r},i} / T_i$

c) $R_{\mathrm{t},i} = (1 - SF) \times (N_{\mathrm{TOT},i} - N_{\mathrm{r},i}) / T_i$

where

*SF* is the scatter fraction as calculated in 4.4.4;

$T_{\mathrm{i}}$ is the acquisition time for frame *i*.

The noise equivalent count rate (NECR), $R_{\mathrm{NEC},i}$ for each time frame shall be calculated as:

$$R_{\mathrm{NEC},i} = R_{\mathrm{t},I}^2 / (R_{\mathrm{TOT},I} + R_{\mathrm{r},i}) \quad (7)$$

The maximum NECR, $R_{\mathrm{NEC,max}}$ shall be reported, as well as the corresponding ACTIVITY, $A_{\mathrm{NEC,max}}$.

#### 4.5.4.2 Test of COUNT LOSS correction scheme

##### 4.5.4.2.1 General

For tomographs with an AXIAL FIELD OF VIEW of 65 cm or less, all slices shall be reconstructed. For tomographs with an AXIAL FIELD OF VIEW greater than 65 cm, only slices in the central 65 cm shall be reconstructed. Attenuation, scatter, COUNT LOSS and randoms correction shall be applied to the data. Images shall be reconstructed using standard methods without decay correction.

##### 4.5.4.2.2 Test

All analyses shall be performed on each reconstructed image *i,j*. The average ACTIVITY $A_{\mathrm{ave},i}$ for each acquisition *i* shall be calculated. The average effective ACTIVITY concentration $A_{\mathrm{eff},i}$ for each acquisition *i* shall be computed by dividing $A_{\mathrm{ave},i}$ by ~~22000~~ 22 700 cm$^3$, which is the volume of the test phantom.

A circular REGION OF INTEREST (ROI) centred on the TRANSVERSE FIELD OF VIEW (*not* centred on the LINE SOURCE) with a diameter of 18 cm shall be drawn on the reconstructed image for each slice *j*. The number of TRUE COINCIDENCES $C_{\mathrm{ROI},i,j}$ in this ROI for each slice *j* and acquisition *i* shall be measured. The COUNT RATE of TRUE COINCIDENCES $R_{\mathrm{ROI},i,j}$ shall be calculated as the ratio of $C_{\mathrm{ROI},i,j}$ and $T_{\mathrm{acq},i}$.

Documents
Document Sharing Hub
Full document details: IEC 61675-1 2022 RLV

~~For each slice $j$, the extrapolated COUNT RATE of the TRUE COINCIDENCES $R_{\mathrm{Extr},i,j}$, shall be calculated. This rate would have been obtained for acquisition $i$ if there were no COUNT LOSSES. To minimize the effects of statistics, $R_{\mathrm{Extr},i,j}$ shall be obtained by the following equation (8):~~

$$R_{\mathrm{Extr},i,j} = \frac{A_{\mathrm{ave},i}}{3} \sum_{k=1}^{3} \frac{R_{\mathrm{ROI},j,k}}{A_{\mathrm{ave},k}} \qquad (8)$$

~~where~~

~~$k = 1$ is the acquisition with the lowest ACTIVITY, and the sum is computed over the three lowest ACTIVITY acquisitions.~~

~~For each slice $j$ of each acquisition $i$, the relative COUNT RATE error $\Delta r_{i,j}$ in percentage units shall be calculated by the following equation (9):~~

$$\Delta r_{i,j} = 100 \left(\frac{R_{\mathrm{ROI},i,j}}{R_{\mathrm{Extr},i,j}} - 1\right) \% \qquad (9)$$

$\Gamma_{\mathrm{ROI},i,j}$ is the average activity concentration in the ROI for each slice $j$ and acquisition $i$.

For each slice $j$, the best fit ROI value $\Gamma_{\mathrm{Fit},i,j}$, shall be calculated by the following Formula (8):

$$\Gamma_{\mathrm{Fit},i,j} = \frac{A_{\mathrm{ave},i}}{I} \sum_{k=1}^{I} \frac{\Gamma_{\mathrm{ROI},i,k}}{A_{\mathrm{ave},k}} \qquad (8)$$

where $I$ shall be the total number of acquisitions with activity at or below maximum NECR ($R_{\mathrm{NEC,max}}$) as determined in 4.5.4.1.2, and the sum shall be computed over each acquisition $k$.

For each slice $j$ of each acquisition $i$, the relative COUNT RATE error $\Delta\gamma_{i,j}$ in percentage units shall be calculated by the following Formula (9):

$$\Delta\gamma_{i,j} = \Gamma_{\mathrm{ROI},i,j} / \Gamma_{\mathrm{Fit},i,j} - 1 \qquad (9)$$

### 4.5.5 Report

#### 4.5.5.1 PET COUNT RATE PERFORMANCE (see 4.5.4.1)

For the system, the following four quantities as a function of the average effective ACTIVITY concentration $A_{\mathrm{ave},i}$ shall be plotted:

a) $R_{\mathrm{t},i}$ – COUNT RATE of TRUE COINCIDENCES;

b) $R_{\mathrm{r},i}$ – COUNT RATE of RANDOM COINCIDENCES;

c) $R_{\mathrm{NEC},i}$ – noise equivalent count rate NECR;

d) $R_{\mathrm{TOT},i}$ – COUNT RATE of TOTAL COINCIDENCES.

The following values, derived from the above plot, shall be reported:

a) $R_{\mathrm{t,max}}$ – maximum COUNT RATE of TRUE COINCIDENCES;

b) $R_{\mathrm{NEC,max}}$ – maximum noise equivalent count rate;

AVA Documents Document Sharing Hub

Full document details: IEC 61675-1 2022 RLV

c) $A_{t,max}$ – the ACTIVITY concentration at which $R_{t,max}$ is reached;

d) $A_{NEC,max}$ – the ACTIVITY concentration at which $R_{NEC,max}$ is reached.

The method used for estimating RANDOM COINCIDENCES shall be reported.

#### 4.5.5.2 Accuracy of COUNT LOSS correction (see 4.5.4.2)

A graph of the highest and lowest values among the slices of ~~$\Delta r_{i,j}$~~ $\Delta\gamma_{i,j}$ versus ~~$a_{eff,i}$~~ $A_{eff,i}$ shall be ~~created~~ plotted using a linear scale. The data points may be joined to form a continuous curve.

The maximum value of the bias ~~$|\Delta r_{i,j}|$~~ $|\Delta\gamma_{i,j}|$ in the ACTIVITY range up to the $A_{NEC,max}$ shall be reported.

## 4.6 Time-of-flight resolution

### 4.6.1 General

Time-of-flight data are used to localize the annihilation point along the LINE-OF-RESPONSE during reconstruction.

NOTE 1 The measurement of TOF RESOLUTION is only applicable to those systems that offer TOF acquisition.

NOTE 2 TOF resolution does not characterize the reconstruction process or effect of TOF reconstruction on the image.

### 4.6.2 Purpose

The purpose of this procedure is to characterize the TOF RESOLUTION.

### 4.6.3 Method

TOF RESOLUTION shall be measured from the data acquired in 4.5.

Figure 5 shows the geometry used in the processing and analysis of the coincidence data.

### 4.6.4 Radionuclide, source distribution and data collection

See 4.5.

### 4.6.5 Data processing

For PET scanners with an AXIAL FIELD OF VIEW of 65 cm or less, data from all slices shall be considered. For PET scanners with an AXIAL FIELD OF VIEW greater than 65 cm, only axial slices in the central 65 cm shall be considered. No corrections for detector sensitivity variation, scatter, random, deadtime or attenuation shall be applied to the measurements, except while reconstructing the images used to localize the line source in 4.6.6.1.

Documents
Document Sharing Hub
Full document details: IEC 61675-1 2022 RLV

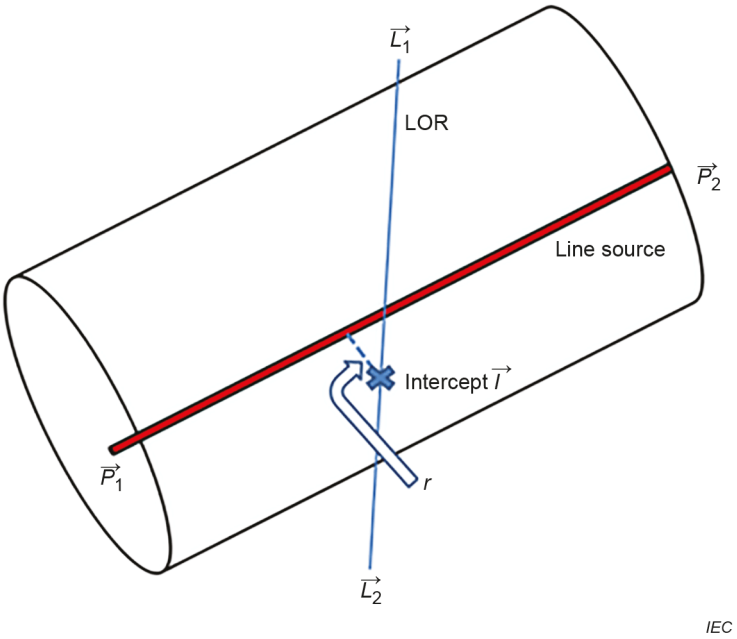


**Key**

*r* shortest distance between LOR and line source

The intercept of the LOR with the line source shall be defined as the point along the LOR with the shortest distance to the line source.

**Figure 5 – Determination of LOR distance from line source**

### 4.6.6 Analysis

#### 4.6.6.1 Identifying the line source position

The first frame of the dynamic sequence where the activity is below the maximum NECR, $R_{NEC,max}$, shall be reconstructed with all available corrections except for decay correction and a pixel size in the transverse slice not to exceed 2,5 mm, forming images in the PET coordinate system. The location of the line source shall be determined by a centroid calculation on all transverse slices, except for those within 10 mm of either end of the axial field of view. A line shall be used to fit with these centroid positions. The intersection of the line with the first and the last transverse slices defines the two points $\vec{P_1}$ and $\vec{P_2}$, respectively. The unit vector $\vec{v}$ for the line shall be calculated as:

$$\vec{v} = \frac{\vec{P_2} - \vec{P_1}}{\left|\vec{P_2} - \vec{P_1}\right|}$$

Images reconstructed for the count rate correction accuracy test in 4.5.4.2 may be used.

#### 4.6.6.2 Evaluation of time differences

##### 4.6.6.2.1 General

The following analysis shall be performed on each time frame of the test phantom data beginning with the last frame acquired above the maximum NECR, $R_{NEC,max}$ as measured in 4.5, and continuing through all frames with at least 500 000 prompt events acquired.

Documents
Document Sharing Hub
Full document details: IEC 61675-1 2022 RLV

#### 4.6.6.2.2 2-D histogram formation

Each event shall be accumulated into one 2-D histogram for each acquisition *j*. The 2-D histograms shall be centred on zero in both the time and spatial dimensions. The bin sizes $\Delta t$ and $\Delta r$ shall be less than one-fourth of the expected FWHM of the timing and spatial distributions, respectively.

For each coincidence event in the data set, $\vec{L_1}$ and $\vec{L_2}$ shall be defined as three-dimensional coordinates of two points along the line in PET coordinates representing the coincidence event, as used in image reconstruction (see Figure 5). Then, the following calculations shall be performed.

a) Compute the unit vector $\vec{u}$ from $\vec{L_1}$ to $\vec{L_2}$:

$$\vec{u} = \frac{\vec{L_2} - \vec{L_1}}{\left|\vec{L_2} - \vec{L_1}\right|}.$$

b) Compute the distance *r'* between the coincidence line and the line source:

$$r = \left(\vec{L_1} - \vec{P_1}\right) \bullet \frac{\vec{u} \times \vec{v}}{\left|\vec{u} \times \vec{v}\right|}.$$

If $|r'|>(20+\Delta r)$ mm, this event shall be excluded from the 2-D histogram formation. Otherwise, continue.

c) Compute the point $\vec{l}$ on the coincidence line closest to the line source:

$$\vec{l} = \vec{L_1} + \frac{\left(\vec{L_1} - \vec{P_1}\right) \bullet \left(\vec{u} - \vec{v}\left(\vec{u} \bullet \vec{v}\right)\right)}{\left|\vec{u} \bullet \vec{v}\right|^2 - 1} \vec{u}.$$

d) Compute the timing error *t'* as the difference between the measured timing data for the event and its expected timing offset:

$$t' = \left(t_1 - t_2\right) - \frac{\left|\vec{L_1} - \vec{l}\right| - \left|\vec{L_2} - \vec{l}\right|}{c}.$$

e) Compute $\tau$ and $\rho$ as:

$$\tau = \mathrm{int}\left(\frac{t' - \Delta t}{\Delta t}\right)$$

$$\rho = \mathrm{int}\left(\frac{r' - \Delta r}{\Delta r}\right).$$

In this context, the function "int" means "round to the nearest integer". Each event shall be accumulated into one 2-D histogram $C_j(\tau, \rho)$ for each acquisition *j*.

### 4.6.7 Scatter and random removal

For each timing bin $\tau$ of each acquisition *j*, the following shall be done.

Documents
Document Sharing Hub
Full document details: IEC 61675-1 2022 RLV

a) Determine the counts per pixel, $C_{L,\tau,j}$ and $C_{R,\tau,j}$, at the left and right edges, respectively, of the 40 mm wide strip at the centre of $C_j(\tau, \rho)$. If these points do not correspond to sample locations of $C_j(\tau, \rho)$, these values are found by linear interpolation (see Figure 4).

b) Form the 1D timing histogram $C_j(\tau)$ by summing contributions from all radial bins in the 40 mm wide strip and correcting for the background:

$$C_j(\tau) = \sum_{\rho} \left\{ C_j(\tau,\rho) - \left[\frac{20-\rho}{40}\right] C_{L,\tau,j} + \left[\frac{\rho+20}{40}\right] C_{R,\tau,j} \right\}$$

#### 4.6.8 FWHM analysis

Each FWHM shall be determined by linear interpolation between adjacent PIXELS at half the maximum PIXEL value, which is the peak of the response function (see Figure 1). The maximum PIXEL value $C_j(t)$ shall be determined by a parabolic fit using the peak point and its two nearest neighbours. Values are converted to time units by multiplication with $\Delta t$.

#### 4.6.9 Report

The following items shall be reported.

a) TOF resolution ($FWHM_{TOF}(j)$), plotted as a function of the effective radioactivity concentration $A_{ave}(j)$, where the volume $V$ is the total volume of the cylindrical phantom (22 700 ml).

b) TOF resolution ($FWHM_{TOF}$) at effective radioactivity concentration of 5,0 kBq/ml, determined by linear interpolation from the values of $A_{ave}(j)$ immediately above and below 5,0 kBq/ml.

### 4.7 Image quality and quantification accuracy of source ACTIVITY concentrations and PET/CT registration accuracy

#### 4.7.1 General

Contrast and noise are factors that affect image quality; their combination determines lesion detectability. Contrast depends on the lesion-to-background ACTIVITY concentration ratio. Image contrast is further compromised by finite SPATIAL RESOLUTION, scatter and randoms. The contrast resolution is affected by the noise present in the background surrounding a lesion.

#### 4.7.2 Purpose

The purpose of 4.7 is to measure image quality factors and quantification accuracy of the PET scanner under normal imaging conditions. To mimic such normal imaging conditions, a torso shaped phantom ~~shall be~~ is used containing multiple hot spheres of decreasing diameters and a cold cylinder insert in a warm background.

The contrast of the hot spheres is measured and compared to the noise in the background to assess lesion detectability. Quantification accuracy is determined by comparing the measured concentrations in the spheres, background, and lung cylinder insert to their true ACTIVITY concentrations. Additional measurements include assessing the ability of the scanner to quantify ACTIVITY concentration as a function of sphere size.

#### 4.7.3 Method

##### 4.7.3.1 General

The whole-body phantom ~~is to~~ shall be used for all measurements (see Figure 6) into which hollow spheres and lung insert ~~are~~ shall be placed (see Figure 7).

AVA Documents Document Sharing Hub

Full document details: IEC 61675-1 2022 RLV

Dimensions are in millimetres and are given within ±1 mm

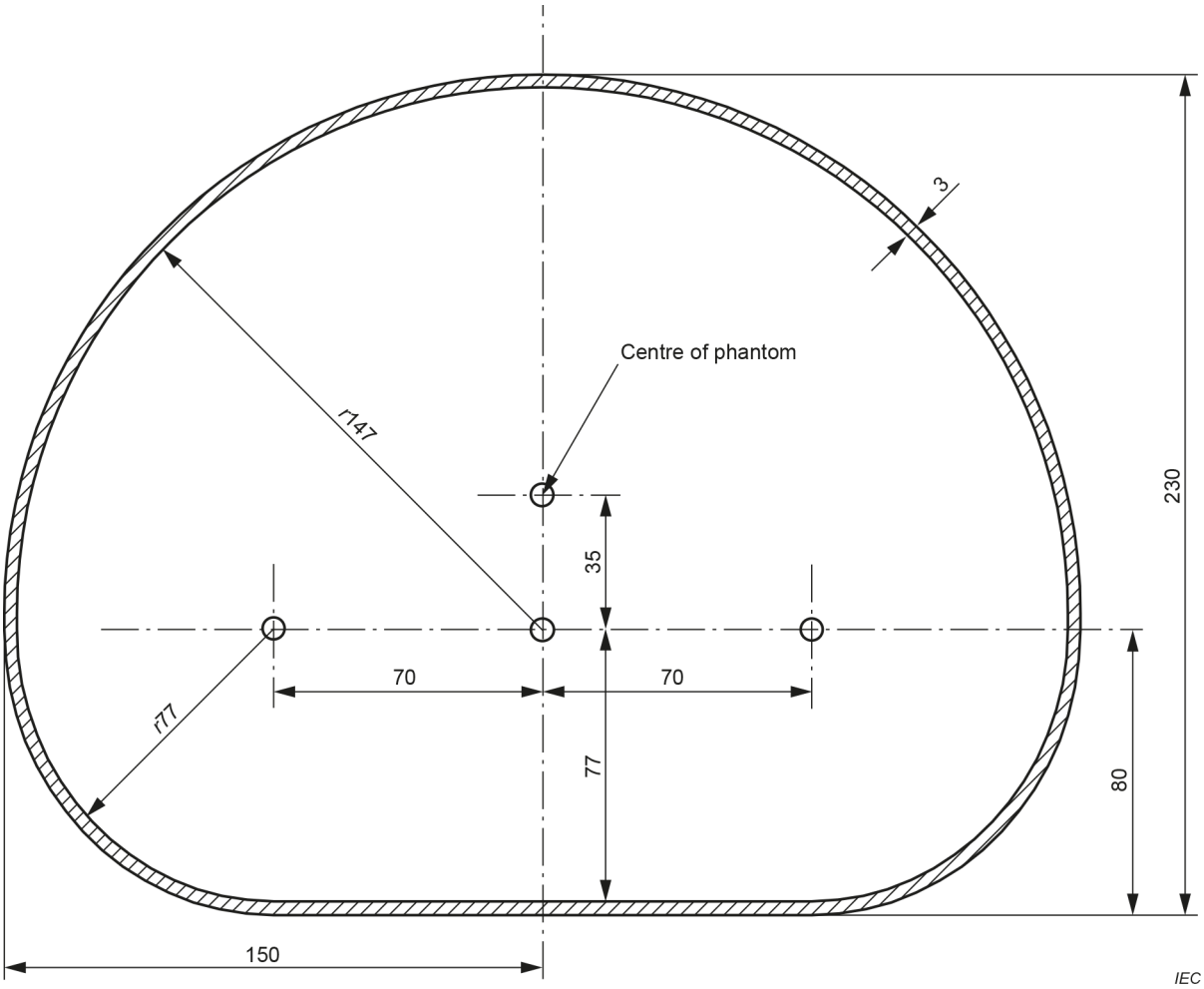


Material: polymethylmethacrylate.

The phantom length ~~shall be~~ is at least 180 mm ± 5 mm.

**Figure 6 – Cross-section of body phantom**

Documents
Document Sharing Hub
Full document details: IEC 61675-1 2022 RLV

Dimensions in millimetres

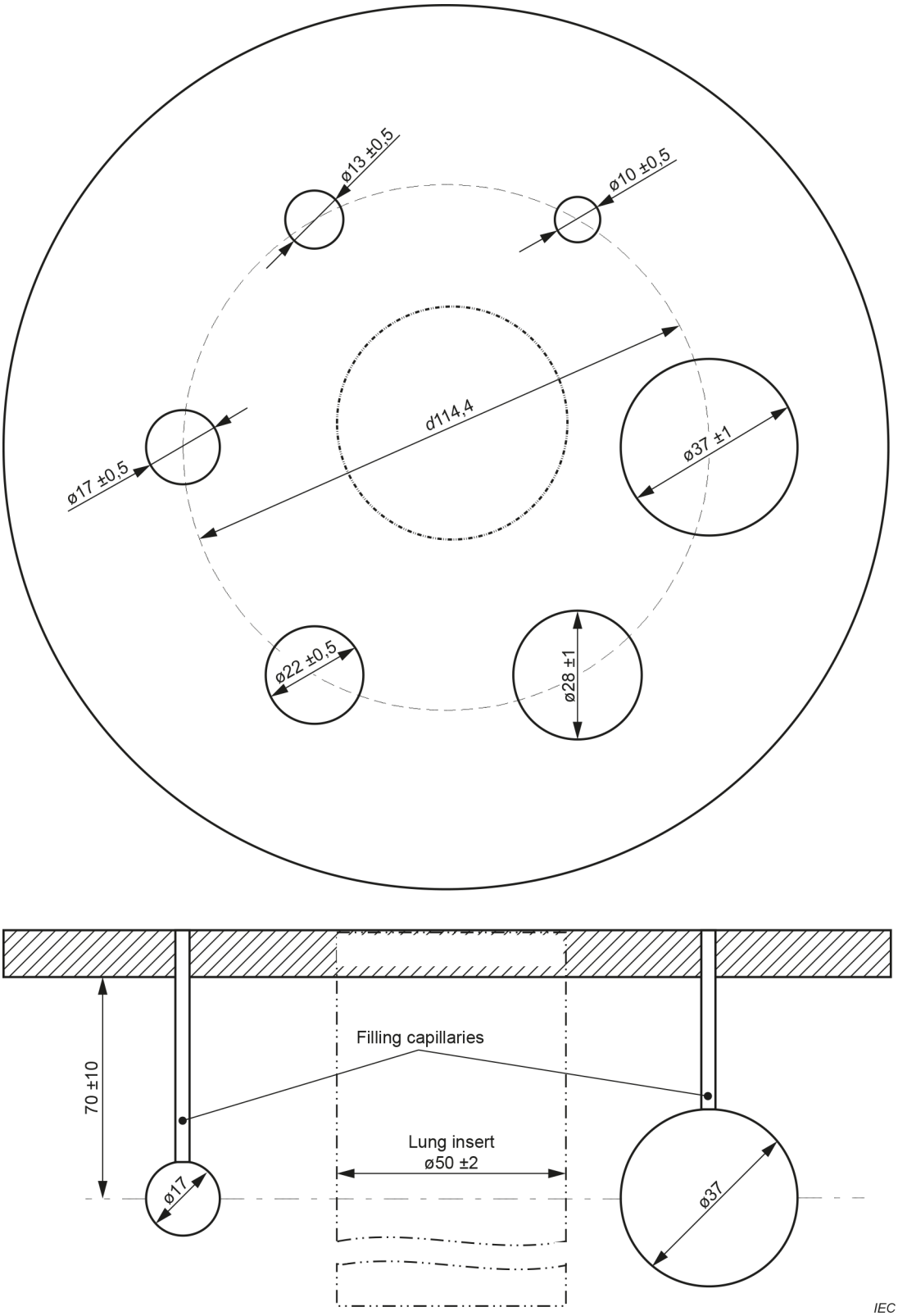


Material: polymethylmethacrylate.

All diameters given are inside diameters. The wall thickness of the spheres ~~shall be~~ is ≤ 1 mm. The centres of the spheres ~~shall be~~ are at the same distance from the surface of the mounting plate. The spheres can also be made from glass. The lung insert cylinder is centred within the image quality phantom and has length that extends through the entire chamber and diameter of 50 mm ± 2 mm.

**Figure 7 – Phantom insert with hollow spheres**

Documents
Document Sharing Hub
Full document details: IEC 61675-1 2022 RLV

The hollow spheres of decreasing diameter ~~are~~ shall be arranged circularly and centred on a single plane and shall have hollow stems that extend through the outer plate to permit filling of the spheres with a radioactive liquid. The lung cylinder insert ~~has~~ shall have a diameter of (50 ± 2) mm and extends through the length of the phantom chamber. The cylinder ~~is~~ shall be filled with a low atomic number material of density of (0,30 ± 0,10) g/cm$^3$, ~~is~~ shall be void of ACTIVITY and ~~simulates~~ shall simulate the ATTENUATION of the lung.

Abutted to the whole-body phantom at the head end (closer to the spheres) ~~is~~ the scatter phantom with LINE SOURCE shall be inserted – see Figure 8 a) – and ~~is~~ shall be used to simulate outside field of view source ACTIVITY. Known source ACTIVITY concentrations ~~are~~ shall be added to all the fillable spheres, image quality phantom background, and scatter phantom with LINE SOURCE inserted. The ~~average~~ ACTIVITY in the LINE SOURCE shall be chosen so that the effective ACTIVITY concentration in the scatter phantom including the LINE SOURCE ~~shall be~~ is equal to the background ACTIVITY concentration in the image quality phantom.

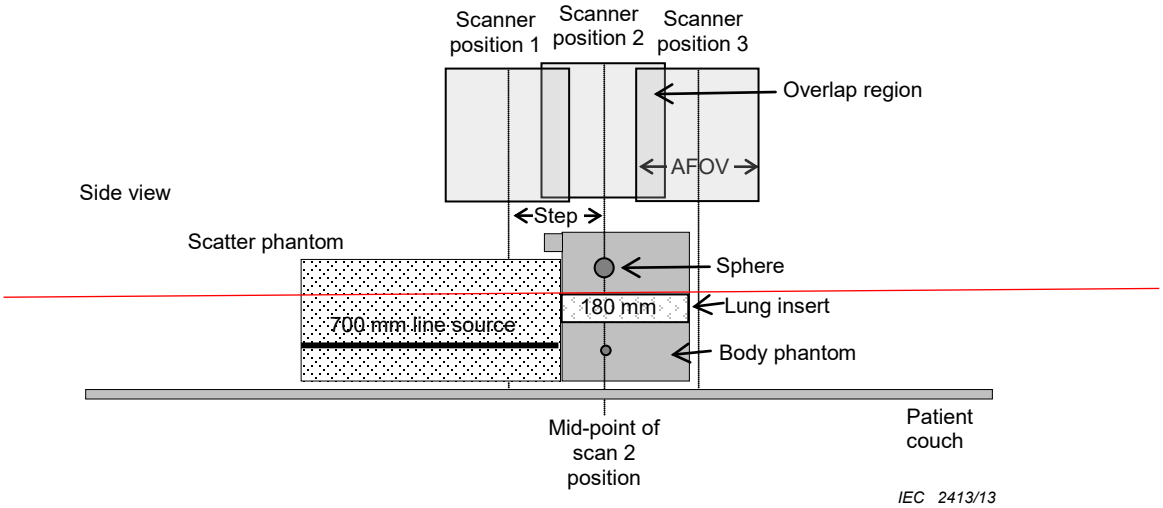


Documents
Document Sharing Hub
Full document details: IEC 61675-1 2022 RLV

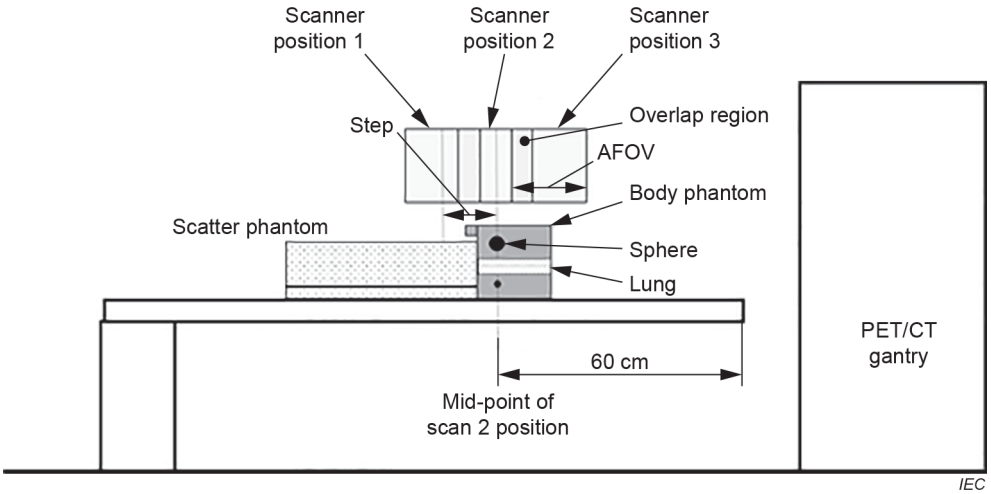


**a) – Without masses**

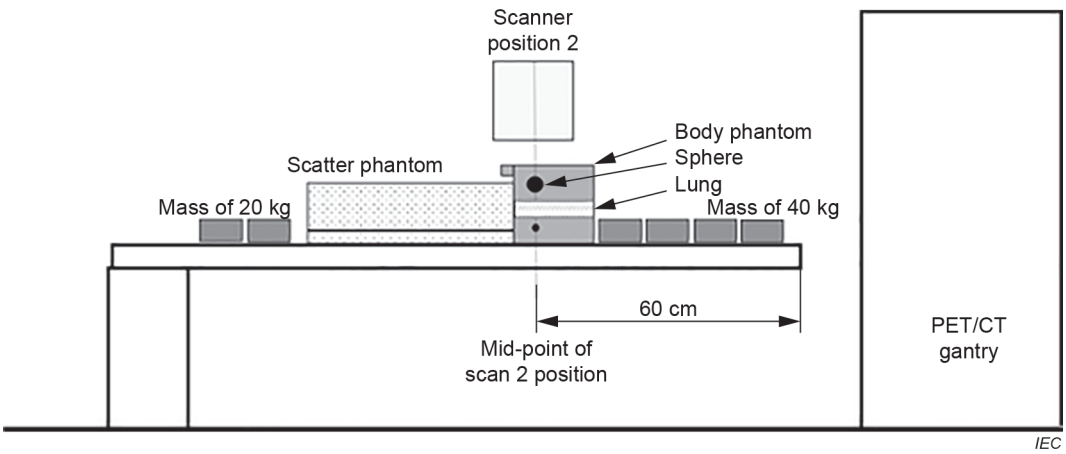


**b) – With masses**

**Figure 8 – Image quality phantom and scatter phantom position for whole body scan acquisition**

A whole-body acquisition covering the length of the whole-body phantom shall be obtained.

The algorithms used for image reconstruction, scatter and ATTENUATION correction shall be those corresponding to the routine whole-body clinical image protocol. PIXEL values in units of kBq/ml shall be produced. Prior to this, a scanner CALIBRATION ~~is required~~ shall be conducted. Results for additional image reconstructions with enhancements may ~~be~~ reported separately.

Following the acquisitions and image reconstruction, ROIs ~~are~~ shall be drawn on selected image slices over the hot spheres, cold cylinder insert, and image quality phantom background. The average ROI ACTIVITY concentrations ~~are~~ shall be used for analysis.

#### 4.7.3.2 RADIONUCLIDE

The RADIONUCLIDE for the measurement shall be $^{18}$F.

#### 4.7.3.3 Source distribution

The ACTIVITY concentration in the whole-body phantom background shall be (5 ± 0,3) kBq/ml. The spheres shall be filled with an ACTIVITY concentration that is between 3,8 and 4,2 times the ACTIVITY concentration in the background. The LINE SOURCE in the scatter phantom shall be filled

AVA Documents Document Sharing Hub
Full document details: IEC 61675-1 2022 RLV

with an ACTIVITY of (110 ± 5) MBq. All ACTIVITY concentrations ~~are~~ shall be specified for the time at the start of acquisition. The RADIONUCLIDE in all phantoms shall be well mixed.

NOTE These concentrations correspond to a typical clinical dosage of 350 MBq in a 70 kg PATIENT for whole body imaging.

The test is critically dependent upon the accurate assays of ACTIVITY to be used. The dose calibrator, where it is difficult to maintain an absolute CALIBRATION to accuracies finer than 10 %, may be used to assay starting ACTIVITY levels. Absolute reference standards using positron emitters ~~should~~ may be considered if higher degrees of accuracy are required.

If the MANUFACTURER recommends a lower dosage for this test, the ACTIVITY concentration in all phantoms may be lowered proportionately. The report shall include the MANUFACTURER recommended dosage.

#### 4.7.3.4 Data collection

The whole-body phantom ~~is~~ shall be placed on the patient bed of the tomograph and ~~is~~ shall be centred within the TRANSVERSE FIELD OF VIEW. The plane passing through the centre of the spheres in the whole-body phantom shall be aligned to the centre of the AXIAL FIELD OF VIEW. The line-source scatter phantom, set directly on the patient bed, ~~abuts~~ shall abut to the head-end of the image quality phantom – see Figure 8 a). The distance of the centre of the spheres to the end of the bed shall be 60 cm.

A whole-body acquisition over the length of the whole-body phantom shall be performed. It is assumed that whole-body acquisition scan consists of multiple stationary scans with the standard overlap between scan positions. The "step size" is the axial distance the bed translates between positions and may be less than the AXIAL FIELD OF VIEW. At least three scan positions are required. Start position 1 ~~is~~ shall be determined by scan position 2 which ~~shall be~~ is axially centred over the transverse plane of the spheres. Position 1 ~~is~~ shall be located towards the scatter phantom at a distance equal to the "step size" used in clinical whole body scans. The end scan at position 3 ~~is~~ shall be where the scanner is moved a "step size" distance toward the opposite end of the image quality phantom so that the centre of the AXIAL FIELD OF VIEW is located beyond the end of the phantom. Additional scan positions in either direction shall be necessary if the AXIAL FIELD OF VIEW of the scanner is insufficient to cover the required length in three steps.

The acquisition time $T_p$ for a single position shall be computed as follows:

$$T_p = (d_{ax}/100\ \text{cm}) \cdot 30\ \text{min} \tag{10}$$

where

$d_{ax}$ is the axial distance in centimetres the bed translates between positions (step size).

Additional measurements ~~can~~ may be taken for different values of scan time and axial coverage. If additional measurements are taken, those values shall be included in the final report.

Prior to the start of the emission acquisition, a CT scan over the entire whole-body scan length ~~is~~ shall be obtained with X-ray technique factors as prescribed per whole-body clinical protocol. If the scanner does not have a CT component, then the prescribed method of transmission imaging ~~must~~ shall be applied and reported.

For the emission scan, ~~use~~ an acquisition matrix, field of view size, slice thickness, acquisition mode as 2D or 3D, and multiple scan overlap as prescribed for routine clinical whole-body scans shall be used.

Documents
Document Sharing Hub
Full document details: IEC 61675-1 2022 RLV

Corrections for RANDOM COINCIDENCES shall be performed and the method used ~~must~~ shall be clearly reported. Enhancements such as time-of-flight information, depth-of-interaction may also be enabled, and the enhancement method ~~must~~ shall be reported. The start-time of the emission scans ~~is~~ shall be used as the reference time for computation of phantom ACTIVITY concentrations and reporting.

Masses shall be added to the table as indicated in Figure 8 b). The PET and the CT acquisition shall be repeated for bed position 2 only. The acquisition time $T_{2p}$ shall be two times of $T_p$.

#### 4.7.3.5 Data processing

Transverse slices shall be reconstructed over the length of the image quality phantom. The standard reconstruction protocol for whole-body imaging shall be applied. The reconstruction algorithm, methods used for ATTENUATION, scatter, and COUNT LOSS corrections, and post reconstruction image filter and all associated parameters shall be reported. ~~If the PET system provides reconstruction software with enhancements such as time-of-flight and resolution recovery these results may be reported separately.~~ Results from alternate reconstruction protocols may be reported separately.

### 4.7.4 Data analysis

#### 4.7.4.1 Data analysis for image quality and quantification accuracy of source ACTIVITY concentrations

##### 4.7.4.1.1 General

The following analysis for the measurements without weights present shall be performed.

##### 4.7.4.1.2 Regions-of-interest

###### 4.7.4.1.2.1 General

For image quality and quantitative accuracy analyses, 2D circular ROIs ~~are~~ shall be drawn over the spheres and whole-body phantom background on selected slices.

###### 4.7.4.1.2.2 Hot sphere ROIs

The transverse slice coinciding with the central plane of the hot spheres shall be identified (this slice will be referred to as the "S-slice"). Circular regions-of-interest (ROIs) shall be drawn over the six spheres in the S-slice. The ROI diameter ~~should~~ shall be made as close as possible to the sphere inner diameter, ~~but shall not exceed~~ without exceeding the inner diameter. The average PIXEL value $P_j$ for each sphere shall be computed.

###### 4.7.4.1.2.3 Background ROIs

The transverse slices as close as possible to ±1 cm and ±2 cm from the S-slice shall be identified. On these four slices and the S-slice, twelve 37 mm diameter ROIs shall be drawn throughout the background at a distance of at least 15 mm from the edge of the phantom (see Figure 9 for an example of background ROI placement on the S-slice). ROIs corresponding to the five smaller diameter spheres shall be drawn concentric within each of the 37 mm diameter ROIs, producing a total of 60 background ROIs for each sphere diameter (12 ROIs on each of the five slices).

Documents
Document Sharing Hub
Full document details: IEC 61675-1 2022 RLV

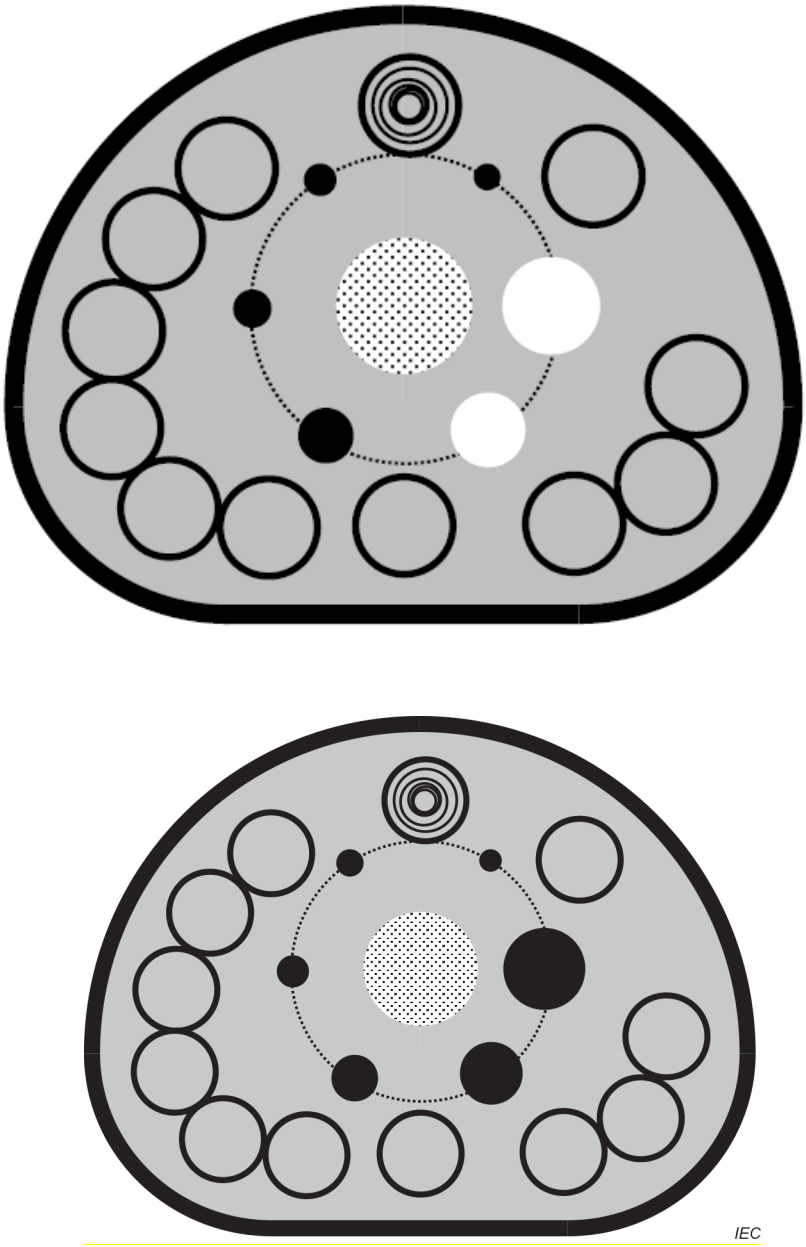


Twelve locations are specified. At each location, six ROIs, identical in size to the sphere ROIs, ~~are~~ shall be placed concentrically.

SOURCE: [1][1], used with permission.

**Figure 9 – Placement of ROIs in the phantom background**

For each sphere diameter, ~~compute~~ the average PIXEL value for each of the 60 ROIs shall be computed, then ~~compute~~ the mean and standard deviation of those 60 ROI values shall be computed.

#### 4.7.4.1.2.4 Whole-body scan lung and background ROIs

~~Draw~~ A 37 mm diameter ROI shall be drawn inside the lung insert on every transverse slice over the entire length of the image quality phantom. Likewise, ~~draw~~ a 37 mm diameter ROI shall be drawn in the phantom background positioned 15 mm from the left edge of the phantom edge.

[1] Numbers in square brackets refer to the Bibliography.

Documents
Document Sharing Hub
Full document details: IEC 61675-1 2022 RLV