IEC 61726

Edition 3.0 2015-09

INTERNATIONAL STANDARD

NORME INTERNATIONALE

Cable assemblies, cables, connectors and passive microwave components – Screening attenuation measurement by the reverberation chamber method

Câbles, cordons, connecteurs et composants hyperfréquence passifs – Mesure de l'affaiblissement d'écran par la méthode de la chambre réverbérante

IEC 61726:2015-09(en-fr)

Documents
Document Sharing Hub

Full document details: IEC 61726 2015

THIS PUBLICATION IS COPYRIGHT PROTECTED

Copyright © 2015 IEC, Geneva, Switzerland

All rights reserved. Unless otherwise specified, no part of this publication may be reproduced or utilized in any form or by any means, electronic or mechanical, including photocopying and microfilm, without permission in writing from either IEC or IEC's member National Committee in the country of the requester. If you have any questions about IEC copyright or have an enquiry about obtaining additional rights to this publication, please contact the address below or your local IEC member National Committee for further information.

Droits de reproduction réservés. Sauf indication contraire, aucune partie de cette publication ne peut être reproduite ni utilisée sous quelque forme que ce soit et par aucun procédé, électronique ou mécanique, y compris la photocopie et les microfilms, sans l'accord écrit de l'IEC ou du Comité national de l'IEC du pays du demandeur. Si vous avez des questions sur le copyright de l'IEC ou si vous désirez obtenir des droits supplémentaires sur cette publication, utilisez les coordonnées ci-après ou contactez le Comité national de l'IEC de votre pays de résidence.

IEC Central Office
3, rue de Varembé
CH-1211 Geneva 20
Switzerland

Tel.: +41 22 919 02 11
Fax: +41 22 919 03 00
info@iec.ch
www.iec.ch

About the IEC
The International Electrotechnical Commission (IEC) is the leading global organization that prepares and publishes International Standards for all electrical, electronic and related technologies.

About IEC publications
The technical content of IEC publications is kept under constant review by the IEC. Please make sure that you have the latest edition, a corrigenda or an amendment might have been published.

IEC Catalogue - webstore.iec.ch/catalogue
The stand-alone application for consulting the entire bibliographical information on IEC International Standards, Technical Specifications, Technical Reports and other documents. Available for PC, Mac OS, Android Tablets and iPad.

IEC publications search - www.iec.ch/searchpub
The advanced search enables to find IEC publications by a variety of criteria (reference number, text, technical committee,…). It also gives information on projects, replaced and withdrawn publications.

IEC Just Published - webstore.iec.ch/justpublished
Stay up to date on all new IEC publications. Just Published details all new publications released. Available online and also once a month by email.

Electropedia - www.electropedia.org
The world's leading online dictionary of electronic and electrical terms containing 20 000 terms and definitions in English and French, with equivalent terms in 16 additional languages. Also known as the International Electrotechnical Vocabulary (IEV) online.

IEC Glossary - std.iec.ch/glossary
65 000 electrotechnical terminology entries in English and French extracted from the Terms and Definitions clause of IEC publications issued since 2002. Some entries have been collected from earlier publications of IEC TC 37, 77, 86 and CISPR.

IEC Customer Service Centre - webstore.iec.ch/csc
If you wish to give us your feedback on this publication or need further assistance, please contact the Customer Service Centre: csc@iec.ch.

A propos de l'IEC
La Commission Electrotechnique Internationale (IEC) est la première organisation mondiale qui élabore et publie des Normes internationales pour tout ce qui a trait à l'électricité, à l'électronique et aux technologies apparentées.

A propos des publications IEC
Le contenu technique des publications IEC est constamment revu. Veuillez vous assurer que vous possédez l'édition la plus récente, un corrigendum ou amendement peut avoir été publié.

Catalogue IEC - webstore.iec.ch/catalogue
Application autonome pour consulter tous les renseignements bibliographiques sur les Normes internationales, Spécifications techniques, Rapports techniques et autres documents de l'IEC. Disponible pour PC, Mac OS, tablettes Android et iPad.

Recherche de publications IEC - www.iec.ch/searchpub

La recherche avancée permet de trouver des publications IEC en utilisant différents critères (numéro de référence, texte, comité d'études,…). Elle donne aussi des informations sur les projets et les publications remplacées ou retirées.

IEC Just Published - webstore.iec.ch/justpublished

Restez informé sur les nouvelles publications IEC. Just Published détaille les nouvelles publications parues. Disponible en ligne et aussi une fois par mois par email.

Electropedia - www.electropedia.org

Le premier dictionnaire en ligne de termes électroniques et électriques. Il contient 20 000 termes et définitions en anglais et en français, ainsi que les termes équivalents dans 16 langues additionnelles. Egalement appelé Vocabulaire Electrotechnique International (IEV) en ligne.

Glossaire IEC - std.iec.ch/glossary
65 000 entrées terminologiques électrotechniques, en anglais et en français, extraites des articles Termes et Définitions des publications IEC parues depuis 2002. Plus certaines entrées antérieures extraites des publications des CE 37, 77, 86 et CISPR de l'IEC.

Service Clients - webstore.iec.ch/csc

Si vous désirez nous donner des commentaires sur cette publication ou si vous avez des questions contactez-nous: csc@iec.ch.

Documents
Document Sharing Hub

Full document details: IEC 61726 2015

IEC 61726

Edition 3.0 2015-09

INTERNATIONAL STANDARD

NORME INTERNATIONALE

Cable assemblies, cables, connectors and passive microwave components – Screening attenuation measurement by the reverberation chamber method

Câbles, cordons, connecteurs et composants hyperfréquence passifs – Mesure de l'affaiblissement d'écran par la méthode de la chambre réverbérante

INTERNATIONAL
ELECTROTECHNICAL
COMMISSION

COMMISSION
ELECTROTECHNIQUE
INTERNATIONALE

ICS 33.120.10; 33.120.30

ISBN 978-2-8322-4922-2

Warning! Make sure that you obtained this publication from an authorized distributor.
Attention! Veuillez vous assurer que vous avez obtenu cette publication via un distributeur agréé.

® Registered trademark of the International Electrotechnical Commission
Marque déposée de la Commission Electrotechnique Internationale

Documents
Document Sharing Hub

Full document details: IEC 61726 2015

CONTENTS

FOREWORD 3
1 Scope 5
2 Normative references 5
3 Terms and definitions 5
4 Basic description of the reverberation chamber method 5
5 Measurement of the screening attenuation of the device under test (DUT) 6
6 Description of the test set-up 6
6.1 Reverberation chamber 6
6.2 Mode stirrer 7
6.3 Antennas 7
6.4 Test equipment 7
6.5 Device under test (DUT) 7
6.6 Linking devices 8
7 Measurement procedure 8
7.1 General 8
7.2 Measurement of the DUT 9
7.2.1 General 9
7.2.2 Standard measurement 9
7.2.3 Fast measurement 9
7.3 Measurement of the insertion loss of the cavity 10
7.4 Control of the test set-up 10
7.4.1 Dynamic range 10
7.4.2 Insertion loss of the chamber 11
7.4.3 Measurement of a calibrator 11
7.4.4 Measurement of lossy DUT 11
7.5 Revolution speed of the mode stirrer 11
7.6 Test frequencies 11
7.7 Voltage standing wave ratio (VSWR) 12
8 Evaluation of the test results 12
Annex A (informative) Relationship between transfer impedance and screening attenuation 13
Annex B (informative) Example of a calibrator 14
Bibliography 16

Figure 1 – Example of a test set-up 7
Figure B.1 – Basic construction details 14

Documents
Document Sharing Hub
Full document details: IEC 61726 2015

INTERNATIONAL ELECTROTECHNICAL COMMISSION

CABLE ASSEMBLIES, CABLES, CONNECTORS AND PASSIVE MICROWAVE COMPONENTS – SCREENING ATTENUATION MEASUREMENT BY THE REVERBERATION CHAMBER METHOD

FOREWORD

1) The International Electrotechnical Commission (IEC) is a worldwide organization for standardization comprising all national electrotechnical committees (IEC National Committees). The object of IEC is to promote international co-operation on all questions concerning standardization in the electrical and electronic fields. To this end and in addition to other activities, IEC publishes International Standards, Technical Specifications, Technical Reports, Publicly Available Specifications (PAS) and Guides (hereafter referred to as "IEC Publication(s)"). Their preparation is entrusted to technical committees; any IEC National Committee interested in the subject dealt with may participate in this preparatory work. International, governmental and non-governmental organizations liaising with the IEC also participate in this preparation. IEC collaborates closely with the International Organization for Standardization (ISO) in accordance with conditions determined by agreement between the two organizations.
2) The formal decisions or agreements of IEC on technical matters express, as nearly as possible, an international consensus of opinion on the relevant subjects since each technical committee has representation from all interested IEC National Committees.
3) IEC Publications have the form of recommendations for international use and are accepted by IEC National Committees in that sense. While all reasonable efforts are made to ensure that the technical content of IEC Publications is accurate, IEC cannot be held responsible for the way in which they are used or for any misinterpretation by any end user.
4) In order to promote international uniformity, IEC National Committees undertake to apply IEC Publications transparently to the maximum extent possible in their national and regional publications. Any divergence between any IEC Publication and the corresponding national or regional publication shall be clearly indicated in the latter.
5) IEC itself does not provide any attestation of conformity. Independent certification bodies provide conformity assessment services and, in some areas, access to IEC marks of conformity. IEC is not responsible for any services carried out by independent certification bodies.
6) All users should ensure that they have the latest edition of this publication.
7) No liability shall attach to IEC or its directors, employees, servants or agents including individual experts and members of its technical committees and IEC National Committees for any personal injury, property damage or other damage of any nature whatsoever, whether direct or indirect, or for costs (including legal fees) and expenses arising out of the publication, use of, or reliance upon, this IEC Publication or any other IEC Publications.
8) Attention is drawn to the Normative references cited in this publication. Use of the referenced publications is indispensable for the correct application of this publication.
9) Attention is drawn to the possibility that some of the elements of this IEC Publication may be the subject of patent rights. IEC shall not be held responsible for identifying any or all such patent rights.

International Standard IEC 61726 has been prepared by IEC technical committee 46: Cables, wires, waveguides, R.F. connectors, R.F. and microwave passive components and accessories.

This bilingual version (2017-10) corresponds to the monolingual English version, published in 2015-09.

This third edition cancels and replaces the second edition, published in 1999. This edition constitutes a technical revision.

It takes into account the latest developments in the design of reverberation chambers as described in IEC 61000-4-21, which is also referencing this standard as a possible test method. Furthermore, an alternative measurement procedure is added which is able to reduce the measurement time needed.

Documents
Document Sharing Hub

Full document details: IEC 61726 2015

The text of this standard is based on the following documents:

FDIS	Report on voting
46/551/FDIS	46/569/RVD

Full information on the voting for the approval of this standard can be found in the report on voting indicated in the above table.

The French version of this standard has not been voted upon.

This publication has been drafted in accordance with the ISO/IEC Directives, Part 2.

The committee has decided that the contents of this publication will remain unchanged until the stability date indicated on the IEC web site under "http://webstore.iec.ch" in the data related to the specific publication. At this date, the publication will be

- reconfirmed,
- withdrawn,
- replaced by a revised edition, or
- amended.

Documents
Document Sharing Hub

Full document details: IEC 61726 2015

CABLE ASSEMBLIES, CABLES, CONNECTORS AND PASSIVE MICROWAVE COMPONENTS – SCREENING ATTENUATION MEASUREMENT BY THE REVERBERATION CHAMBER METHOD

1 Scope

The requirements of modern electronic equipment have indicated a demand for a method for testing screening attenuation of microwave components over their whole frequency range. Convenient test methods exist for low frequencies and components of regular shape. These test methods are described in the relevant IEC product specifications (e.g. IEC 62153-4-3). For higher frequencies and for components of irregular shape, a new test method has become necessary and such a test method is described in this International Standard.

This International Standard describes the measurement of screening attenuation by the reverberation chamber test method, sometimes named mode stirred chamber, suitable for virtually any type of microwave component and having no theoretical upper frequency limit. It is only limited toward low frequencies due to the size of the test equipment, which is frequency-dependent and is only one of several methods of measuring screening attenuation.

For the purpose of this standard, examples of microwave components are waveguides, phase shifters, diplexers/multiplexers, power dividers/combiners etc.

2 Normative references

The following documents, in whole or in part, are normatively referenced in this document and are indispensable for its application. For dated references, only the edition cited applies. For undated references, the latest edition of the referenced document (including any amendments) applies.

IEC 61196-1, *Coaxial communication cables – Part 1: Generic specification – General, definitions and requirements*

IEC TS 62153-4-1, *Metallic communication cable test methods – Part 4-1: Electromagnetic compatibility (EMC) – Introduction to electromagnetic screening measurements*

IEC 61000-4-21, *Electromagnetic compatibility (EMC) – Part 4-21: Testing and measurement techniques – Reverberation chamber test methods*

3 Terms and definitions

For the purposes of this document, the terms and definitions given in IEC 61196-1 and IEC 61000-4-21 apply.

4 Basic description of the reverberation chamber method

The reverberation chamber method for measurement of the screening attenuation of microwave components consists of exposing the device under test (DUT) to an almost homogeneous and isotropic electromagnetic field and then measuring the signal level induced into the device.

Documents
Document Sharing Hub

Full document details: IEC 61726 2015

These conditions are achieved by the use of a shielded enclosure, which acts as an oversized cavity (in terms of wavelength), with a high quality factor. Its boundary conditions are continuously agitated by a rotating reflective surface (mode stirrer), mounted within the chamber, which enables the field to approach homogeneous and isotropic conditions during one revolution.

Electromagnetic power is fed to the chamber by means of an input or transmitting antenna. The strength of the field inside the chamber is measured through a reference antenna. The ratio of the injected power (input antenna) to the received power (reference antenna) is the insertion loss of the cavity. The insertion loss is strongly frequency dependent and is also dependent on the quality factor of the cavity. More detailed explanation on the measurement facility can be found in IEC 61000-4-21.

It has been shown that, due to the isotropic field, any antenna placed inside the cavity behaves as if its gain was unity [2][1], therefore no directional effect is to be expected. If the device under test is electrically short, its screening attenuation will be directly related to usual transfer parameters (Z_t and Z_f). If the device under test is not electrically short, the screening attenuation may still be related to Z_t and Z_f in some simple cases (evenly distributed leakage, periodically distributed leakage) using summing functions derived from antenna network theory.

5 Measurement of the screening attenuation of the device under test (DUT)

The measurement of screening attenuation is based on the comparison of the electromagnetic field power outside the DUT to the electromagnetic field power induced into the DUT. The screening attenuation is then defined as:

$$a_s = -10 \log_{10} \left(\frac{P_{DUT}}{P_{REF}} \right) \tag{1}$$

or

$$a_s = -10 \log_{10} \left(\frac{P_{DUT}}{P_{INJ}} \right) - \Delta_{ins} \tag{2}$$

where

P_{DUT} is the power coupled to the device under test (W);

P_{REF} is the power coupled to the reference antenna (W);

P_{INJ} is the power injected into the chamber (W);

Δ_{ins} is the insertion loss of the chamber in decibels (dB).

6 Description of the test set-up

6.1 Reverberation chamber

The used reverberation chamber shall be compliant to IEC 61000-4-21.

In general, a reverberation chamber is a shielded enclosure having any shape. A perfect cubic shape should be avoided for optimum performance at lower frequencies. It shall be made of conductive materials (copper, aluminium or steel) and shall not contain lossy materials. The size of the cavity depends on the lowest test frequency. For a sufficient test facility, a number of at least 100 modes need to be present at this frequency. The upper frequency limit depends

[1] Figures in square brackets refer to the Bibliography.

Documents
Document Sharing Hub
Full document details: IEC 61726 2015

on the quality of the shielding enclosure and cables. Furthermore, the sensitivity of the used measurement instruments limits the maximum useable frequency.

6.2 Mode stirrer

The mode stirrer shall be large with respect to wavelength and be bent at angles to the walls of the chamber. The mode stirrer shall be at least two wavelengths from tip to tip at the lowest test frequency.

6.3 Antennas

The reverberation chamber is equipped with input and reference antennas. Both antennas shall present limited resonances in the frequency range and shall not introduce losses; their return loss shall be better than 6 dB.

For convenience, the same antenna should be kept for the whole frequency range. However, strongly polarised and directional antennas may disturb measurements due to lack of isotropic field state. This is checked during the calibration of the reverberation chamber according to IEC 61000-4-21.

6.4 Test equipment

The essential test equipment and components required for an automated screening attenuation measurement are shown in Figure 1. Preamplifiers, amplifiers and other control equipment may also be included in order to improve performance. The generator and the spectrum analyser shall have a common, highly stable frequency reference.

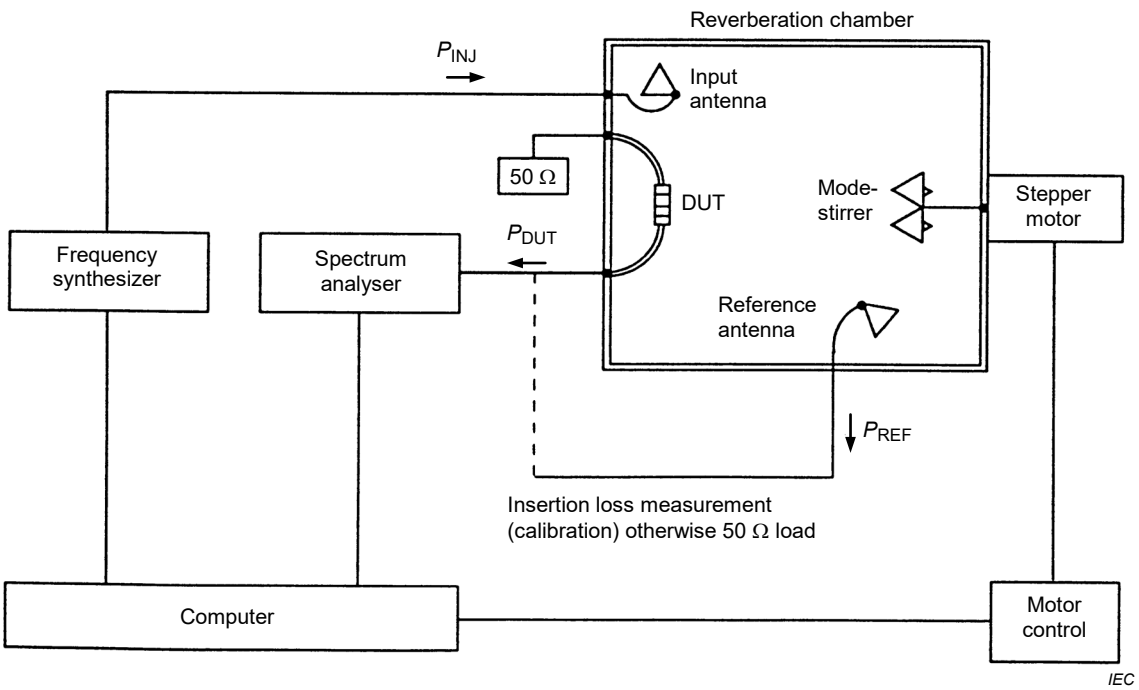

Figure 1 – Example of a test set-up

6.5 Device under test (DUT)

To avoid resonances, the DUT is inserted into a loop (made of semi-rigid coaxial cable) having a length of more than four wavelengths at minimum frequency. The other ports of the DUT should be terminated with matched loads having a screening attenuation at least 10 dB better than the DUT. The assembly is then placed inside the chamber in any orientation and location, the coupling zone being inside the area of homogeneous field according to IEC 61000-4-21.

AVA Documents Document Sharing Hub

Full document details: IEC 61726 2015

This is usually the case if a minimum distance from the chamber panels of one wavelength at the lowest frequency is kept. If the DUT is a cable, it shall be ensured that the connectors used are those recommended for the particular type of cable, in order to minimize interface losses. If the cable is to be used in a bent form, than it shall be tested within the limitations imposed by a relevant standard or the manufacturer.

Both ends of the loop are connected to the outputs from the chamber. One end is terminated with a matched load and the other end is connected to the spectrum analyzer. It is also acceptable to terminate the DUT inside the chamber, in which case the second leg of the loop shall be replaced by a single wire, one end being electrically linked to the DUT, the other end to a panel of the chamber.

For the purpose of this method of measurement, waveguides and waveguide accessories (WUT) are not coaxial devices. Therefore, they require to be connected to the appropriate waveguide to coaxial transition(s) in order to be tested in the reverberation chamber.

The measurement of the dynamic range, insertion loss and coaxial calibrator shall be carried out with the waveguide to coaxial transition assembled in the test circuit in the same manner as for the testing of the WUT.

The design of the waveguide to coaxial transitions shall be such that their input and output return loss shall be better than 15 dB. Their design shall ensure that when they are assembled into the test circuit, with a highly screened waveguide in place of the WUT, the total screening effectiveness (dynamic range) shall be at least 10 dB better than the specification for the WUT.

6.6 Linking devices

Linking devices are normally 50 Ω coaxial lines having a screening attenuation at least 10 dB better than the DUT. Depending on practical considerations, semi-rigid or semi-flexible cables may be used.

All linking lines shall be characterized for attenuation at all test frequencies prior to starting the test (attenuators, cable assemblies, etc.).

Equation (2) shall be corrected, taking into account the insertion losses of linking devices:

$$a_s = -10\log_{10}\left(\frac{P_{DUT}}{P_{INJ}}\right) - \Delta_{ins} - X_L \qquad (3)$$

where X_L is the insertion loss of all linking devices inside or outside the chamber and is expressed in decibels (dB).

These corrections may be included as part of the test programme for an automated test system. They shall be checked periodically and, at least, during calibration of the test system.

7 Measurement procedure

7.1 General

Different approaches are acceptable depending on the performance of the equipment:

– discrete tuning (step positioning of the mode stirrer);
– continuous tuning (constant rotation of the stirrer);
– peak power acquisition on one revolution of the mode stirrer;
– averaged power calculation on one rotation of the mode stirrer.

Documents
Document Sharing Hub
Full document details: IEC 61726 2015

When deciding on a measurement procedure, it shall be recognized that:

– discrete tuning is slow and requires a large number of sample measurements to be taken per revolution of the mode stirrer (200 is a usual value up to 20 GHz). This does, however, result in the acquisition of more accurate measurements;
– averaged power calculation during one revolution of the mode stirrer dramatically decreases the dynamic range of the method. In this case, acquisitions shall be recorded in watts (W) and not in dBm.

The measurement procedure described here is very economical in time, but requires a modern and stable spectrum analyser.

7.2 Measurement of the DUT

7.2.1 General

Depending on the available measurement instruments and the need on dynamic range, there are two possibilities on measurement.

7.2.2 Standard measurement

The standard measurement offers a high dynamic range, especially if power controlled amplifiers are used at the output of the generator.

The synthesized generator is connected to the input antenna and set to deliver a constant power at a fixed frequency. The mode stirrer is set to rotate at a constant speed (for example, 1 revolution every 5 s).

The spectrum analyser is connected to the output of the device under test. Its resolution filter is centred on the emitting frequency of the synthesizer and is fixed (SPAN 0: demodulator mode).

The spot scans the screen during a period which is equal to the time of one revolution of the mode stirrer.

The resulting trace which appears on the screen shows the evolution of the power as a function of the angular position of the mode stirrer.

After one complete revolution of the mode stirrer, the maximum value of the power is recorded.

Screening attenuation is then calculated, taking into account the attenuation of links and insertion loss of the cavity (equation (3)).

The same procedure is repeated for all the required test frequencies.

7.2.3 Fast measurement

For a faster measurement, a spectrum analyser with synchronized tracking generator is used [5]. The resolution bandwidth is set according to the requirements on dynamic range. Furthermore, the maximum hold function has to be used.

To calibrate the chamber set up and to determine the insertion loss, a first measurement is performed in which the spectrum analyser input is connected to the reference antenna and the tracking generator output is connected to the input antenna. The mode stirrer is turning continuously with e.g. 1 revolution every 5 s. The analyser needs to be set into a continuous sweep mode with max hold function. To ensure that a sufficient amount of independent samples have been recorded, the sweep time of the spectrum analyser and the revolution time of the stirred must not be equivalent or integer multiple of each other. If no changes in the max

Documents
Document Sharing Hub
Full document details: IEC 61726 2015

hold values can be recognized, the insertion loss of the chamber has been determined. Therefore, at least 20 sweeps are necessary.

For the determination of the screening attenuation, the tracking generator output has to be connected to the DUT instead of the input antenna and the measurement sequence from the first step is repeated. Then the screening attenuation simply can be calculated by subtracting the result from the first step from the one of the second step. This can either be done in a post processing step as well as by using the thru-calibration of modern spectrum analysers with build in tracking generators (therefore the first step is used to calibrate the system).

To check the maximum dynamic range, the DUT needs to be replaced by a shielded match load and the second measurement has to be performed with this configuration. If the result is not fulfilling the needs on dynamic range, the resolution bandwidth hast to be reduced. It has to be kept in mind that this might enlarge the measurement time a lot because a reduced measurement bandwidth is coming along with an enlarged sweep time.

7.3 Measurement of the insertion loss of the cavity

The synthesized generator is connected to the input antenna and set to deliver a constant power at a fixed frequency. The mode stirrer is also set to rotate at a constant speed. All parameters, i.e. rotation speed and spectrum analyzer set-up (except for input attenuator and reference level) shall be the same as those used during DUT measurement.

The spectrum analyser is connected to the output of the reference antenna. After a complete revolution of the mode stirrer, the maximum value of the power is recorded.

The insertion loss, Δ_{ins}, of the chamber is then calculated:

$$\Delta_{ins} = -10\log_{10}\left(\frac{P_{REF}}{P_{INJ}}\right) + X_L \tag{4}$$

where

P_{INJ} is the input power (W);

P_{REF} is the output power (W);

X_L is the insertion loss of linking devices (dB).

NOTE The insertion loss Δ_{ins} of the chamber is a function of frequency and is a characteristic of each reverberation chamber. It depends on construction parameters such as conductivity of panels, geometry, lossy materials inside the cavity, coupling through apertures, and measurement parameters such as rotation velocity of the mode stirrer and bandwidth of the spectrum filter. It may be measured either before each DUT measurement or made part of the test programme for an automated test system.

7.4 Control of the test set-up

7.4.1 Dynamic range

Prior to taking a set of measurements, the dynamic range of the test set-up shall be checked using the same linking devices (cables, connectors) and terminations as for the DUT, except that the DUT shall be replaced by a highly screened device. The dynamic range shall be at least 10 dB better than the specification of the DUT.

Documents
Document Sharing Hub

Full document details: IEC 61726 2015