IEC 61747-5-3

Edition 1.0 2009-04

INTERNATIONAL STANDARD

NORME INTERNATIONALE

Liquid crystal display devices – Part 5-3: Environmental, endurance and mechanical test methods – Glass strength and reliability

Dispositifs d'affichage à cristaux liquides – Partie 5-3: Méthodes d'essais d'environnement, d'endurance et mécaniques – Résistance et fiabilité du verre

IEC 61747-5-3:2009

Documents
Document Sharing Hub

Full document details: IEC 61747-5-3 2009

THIS PUBLICATION IS COPYRIGHT PROTECTED

Copyright © 2009 IEC, Geneva, Switzerland

All rights reserved. Unless otherwise specified, no part of this publication may be reproduced or utilized in any form or by any means, electronic or mechanical, including photocopying and microfilm, without permission in writing from either IEC or IEC's member National Committee in the country of the requester.
If you have any questions about IEC copyright or have an enquiry about obtaining additional rights to this publication, please contact the address below or your local IEC member National Committee for further information.

Droits de reproduction réservés. Sauf indication contraire, aucune partie de cette publication ne peut être reproduite ni utilisée sous quelque forme que ce soit et par aucun procédé, électronique ou mécanique, y compris la photocopie et les microfilms, sans l'accord écrit de la CEI ou du Comité national de la CEI du pays du demandeur.
Si vous avez des questions sur le copyright de la CEI ou si vous désirez obtenir des droits supplémentaires sur cette publication, utilisez les coordonnées ci-après ou contactez le Comité national de la CEI de votre pays de résidence.

IEC Central Office
3, rue de Varembé
CH-1211 Geneva 20
Switzerland
Email: inmail@iec.ch
Web: www.iec.ch

About the IEC

The International Electrotechnical Commission (IEC) is the leading global organization that prepares and publishes International Standards for all electrical, electronic and related technologies.

About IEC publications

The technical content of IEC publications is kept under constant review by the IEC. Please make sure that you have the latest edition, a corrigenda or an amendment might have been published.

- Catalogue of IEC publications: www.iec.ch/searchpub
The IEC on-line Catalogue enables you to search by a variety of criteria (reference number, text, technical committee,…). It also gives information on projects, withdrawn and replaced publications.
- IEC Just Published: www.iec.ch/online_news/justpub
Stay up to date on all new IEC publications. Just Published details twice a month all new publications released. Available on-line and also by email.
- Electropedia: www.electropedia.org
The world's leading online dictionary of electronic and electrical terms containing more than 20 000 terms and definitions in English and French, with equivalent terms in additional languages. Also known as the International Electrotechnical Vocabulary online.
- Customer Service Centre: www.iec.ch/webstore/custserv
If you wish to give us your feedback on this publication or need further assistance, please visit the Customer Service Centre FAQ or contact us:
Email: csc@iec.ch
Tel.: +41 22 919 02 11
Fax: +41 22 919 03 00

A propos de la CEI

La Commission Electrotechnique Internationale (CEI) est la première organisation mondiale qui élabore et publie des normes internationales pour tout ce qui a trait à l'électricité, à l'électronique et aux technologies apparentées.

A propos des publications CEI

Le contenu technique des publications de la CEI est constamment revu. Veuillez vous assurer que vous possédez l'édition la plus récente, un corrigendum ou amendement peut avoir été publié.

- Catalogue des publications de la CEI: www.iec.ch/searchpub/cur_fut-f.htm
Le Catalogue en-ligne de la CEI vous permet d'effectuer des recherches en utilisant différents critères (numéro de référence, texte, comité d'études,…). Il donne aussi des informations sur les projets et les publications retirées ou remplacées.
- Just Published CEI: www.iec.ch/online_news/justpub
Restez informé sur les nouvelles publications de la CEI. Just Published détaille deux fois par mois les nouvelles publications parues. Disponible en-ligne et aussi par email.
- Electropedia: www.electropedia.org
Le premier dictionnaire en ligne au monde de termes électroniques et électriques. Il contient plus de 20 000 termes et définitions en anglais et en français, ainsi que les termes équivalents dans les langues additionnelles. Egalement appelé Vocabulaire Electrotechnique International en ligne.
- Service Clients: www.iec.ch/webstore/custserv/custserv_entry-f.htm
Si vous désirez nous donner des commentaires sur cette publication ou si vous avez des questions, visitez le FAQ du Service clients ou contactez-nous:
Email: csc@iec.ch
Tél.: +41 22 919 02 11
Fax: +41 22 919 03 00

Documents
Document Sharing Hub

Full document details: IEC 61747-5-3 2009

IEC 61747-5-3

Edition 1.0 2009-04

INTERNATIONAL STANDARD

NORME INTERNATIONALE

Liquid crystal display devices – Part 5-3: Environmental, endurance and mechanical test methods – Glass strength and reliability

Dispositifs d'affichage à cristaux liquides – Partie 5-3: Méthodes d'essais d'environnement, d'endurance et mécaniques – Résistance et fiabilité du verre

INTERNATIONAL
ELECTROTECHNICAL
COMMISSION

COMMISSION
ELECTROTECHNIQUE
INTERNATIONALE

PRICE CODE
CODE PRIX

R

ICS 31.120

ISBN 978-2-88910-554-0

® Registered trademark of the International Electrotechnical Commission
Marque déposée de la Commission Electrotechnique Internationale

Documents
Document Sharing Hub

Full document details: IEC 61747-5-3 2009

CONTENTS

FOREWORD ... 3
INTRODUCTION ... 5
1 Scope ... 6
2 Normative references ... 6
3 Terms and definitions ... 6
4 Abbreviated terms ... 7
5 Apparatus ... 7
5.1 General ... 7
5.2 Method A: Quasistatic biaxial strength ... 8
5.3 Method B: Quasistatic edge strength (parent glass) ... 8
5.4 Method C: Quasistatic strength (module) ... 9
5.5 Method D: Fatigue constant ... 10
6 Test sample ... 10
6.1 General ... 10
6.2 Parent glass ... 11
6.3 Full size module ... 11
7 Procedure: Quasistatic loading ... 11
8 Stress calculations ... 11
8.1 General ... 11
8.2 Quasistatic biaxial failure stress (parent glass) ... 11
8.3 Quasistatic edge failure stress (parent glass) ... 12
8.4 Quasistatic failure load (LCD module) ... 12
9 Fatigue and reliability calculations ... 12
9.1 General ... 12
9.2 Dynamic fatigue calculation ... 13
9.3 Weibull parameter calculation from dynamic failure stress data ... 13
9.4 Extrapolated static fatigue and Weibull distribution calculation ... 13
10 Reporting requirements ... 14

Annex A (informative) Worked test example ... 15

Bibliography ... 18

Figure 1 – Schematic of ROR test fixture for measuring biaxial strength of parent glass ... 8
Figure 2 – Vertical bend test fixture for measuring the edge strength of parent glass ... 9
Figure 3 – Photograph and schematic of strength measurement for full-size LCD module ... 10
Figure A.1 – Weibull plot of biaxial strength of abraded glass with different thicknesses ... 15
Figure A.2 – Fracture surface of parent glass with 0,089 mm mirror radius ... 16
Figure A.3 – Plot of calculated strength versus 1/square root of mirror radius ... 16
Figure A.4 – Weibull distribution of the strength of 17” module ... 17

Table A.1 – Example of strength data before and after abrasion ... 15
Table A.2 – Example of strength data for all modules and low strength modules ... 17

AVA Documents
Document Sharing Hub

Full document details: IEC 61747-5-3 2009

INTERNATIONAL ELECTROTECHNICAL COMMISSION

LIQUID CRYSTAL DISPLAY DEVICES –

Part 5-3: Environmental, endurance and mechanical test methods – Glass strength and reliability

FOREWORD

1) The International Electrotechnical Commission (IEC) is a worldwide organization for standardization comprising all national electrotechnical committees (IEC National Committees). The object of IEC is to promote international co-operation on all questions concerning standardization in the electrical and electronic fields. To this end and in addition to other activities, IEC publishes International Standards, Technical Specifications, Technical Reports, Publicly Available Specifications (PAS) and Guides (hereafter referred to as "IEC Publication(s)"). Their preparation is entrusted to technical committees; any IEC National Committee interested in the subject dealt with may participate in this preparatory work. International, governmental and non-governmental organizations liaising with the IEC also participate in this preparation. IEC collaborates closely with the International Organization for Standardization (ISO) in accordance with conditions determined by agreement between the two organizations.
2) The formal decisions or agreements of IEC on technical matters express, as nearly as possible, an international consensus of opinion on the relevant subjects since each technical committee has representation from all interested IEC National Committees.
3) IEC Publications have the form of recommendations for international use and are accepted by IEC National Committees in that sense. While all reasonable efforts are made to ensure that the technical content of IEC Publications is accurate, IEC cannot be held responsible for the way in which they are used or for any misinterpretation by any end user.
4) In order to promote international uniformity, IEC National Committees undertake to apply IEC Publications transparently to the maximum extent possible in their national and regional publications. Any divergence between any IEC Publication and the corresponding national or regional publication shall be clearly indicated in the latter.
5) IEC itself does not provide any attestation of conformity. Independent certification bodies provide conformity assessment services and, in some areas, access to IEC marks of conformity. IEC is not responsible for any services carried out by independent certification bodies.
6) All users should ensure that they have the latest edition of this publication.
7) No liability shall attach to IEC or its directors, employees, servants or agents including individual experts and members of its technical committees and IEC National Committees for any personal injury, property damage or other damage of any nature whatsoever, whether direct or indirect, or for costs (including legal fees) and expenses arising out of the publication, use of, or reliance upon, this IEC Publication or any other IEC Publications.
8) Attention is drawn to the Normative references cited in this publication. Use of the referenced publications is indispensable for the correct application of this publication.
9) Attention is drawn to the possibility that some of the elements of this IEC Publication may be the subject of patent rights. IEC shall not be held responsible for identifying any or all such patent rights.

International Standard IEC 61747-5-3 has been prepared by IEC technical committee 110: Flat panel display devices.

This International Standard replaces the IEC/PAS 61747-5-3, published in 2007.

There have been no significant revisions since the publication of the PAS version.

This part of IEC 61747 is a sectional specification for liquid crystal display cells. It is to be read in conjunction with the IEC 61747-1 to which it refers.

Documents
Document Sharing Hub

Full document details: IEC 61747-5-3 2009

The text of this standard is based on the following documents:

FDIS	Report on voting
110/169/FDIS	110/177/RVD

Full information on the voting for the approval of this standard can be found in the report on voting indicated in the above table.

This publication has been drafted in accordance with the ISO/IEC Directives, Part 2.

Future standards in this series will carry the new general title as cited above. Titles of existing standards in this series will be updated at the time of the next edition.

A list of all parts of the IEC 61747 series, under the general title *Liquid crystal display devices*, can be found on the IEC website.

The committee has decided that the contents of this publication will remain unchanged until the maintenance result date indicated on the IEC web site under "http://webstore.iec.ch" in the data related to the specific publication. At this date, the publication will be

- reconfirmed;
- withdrawn;
- replaced by a revised edition, or
- amended.

The contents of the corrigendum of November 2011 have been included in this copy.

Documents
Document Sharing Hub

Full document details: IEC 61747-5-3 2009

INTRODUCTION

IEC 61747-5-3 facilitates the characterization of mechanical strength properties of LCD modules and their component glass. Analysis and testing are performed on LCD Module component glass as well as finished LCD modules. Statistics of mechanical strength of the modules are determined allowing a prediction of module failure probability at a given stress level or for a given probability of failure, the maximum recommended safe loading stress for the module.

Documents
Document Sharing Hub

Full document details: IEC 61747-5-3 2009

LIQUID CRYSTAL DISPLAY DEVICES –

Part 5-3: Environmental, endurance and mechanical test methods – Glass strength and reliability

1 Scope

This part of IEC 61747 applies to commercially available liquid crystal displays (LCDs). This standard applies to all LCD types, including transmissive, reflective or transflective liquid crystal display (LCD) modules using either segment, passive or active matrix and achromatic or colour type LCDs that are equipped with their own integrated source of illumination or without their own source of illumination.

The objective of this standard is to establish uniform requirements for accurate and reliable measurements of the following LCD parameters:

a) quasistatic strength,

b) quasistatic fatigue.

The methods described in this standard apply to all sizes, small and large, liquid crystal displays.

NOTE Methods for measuring the fatigue constant are described in this standard and are taken from the referenced literature, see [13][1] to [20]. The primary results are formulae for estimated allowable stress for the specified lifetime or estimated failure rate for the specified stress level. As an example, limited data for strength and fatigue behaviour of LCD glass are included in an informative Annex A. Similarly, limited data for static strength of LCD modules are also included and compared with that of parent glass.

2 Normative references

The following referenced documents are indispensable for the application of this document. For dated references, only the edition cited applies. For undated references, the latest edition of the referenced document (including any amendments) applies.

IEC 61747-1, *Liquid crystal and solid-state display devices – Part 1: Generic specification*

IEC 61747-5:1998, *Liquid crystal and solid-state display devices – Part 5: Environmental, endurance and mechanical test methods*

3 Terms and definitions

For the purposes of this document, the following terms and definitions apply.

3.1
strength
stress at which a sample fails for a given loading condition

3.2
LCD surface strength
biaxial strength wherein surface flaws with different orientations are subjected to uniform tension during measurement

[1] Figures in square brackets refer to the bibliography.

Documents
Document Sharing Hub

Full document details: IEC 61747-5-3 2009

NOTE Refer to [1] to [4] in the bibliography for further information.

3.3
LCD edge strength
uniaxial strength wherein edge flaws are subjected to tension during measurement

NOTE Refer to [5] to [8] in the bibliography for further information.

3.4
LCD (mechanical) reliability
either an estimated allowable stress which the LCDs can sustain for a specified period of time or as an estimated failure rate at a specified stress level

NOTE 1 Both approaches for quantifying the reliability of LCDs use the power law for slow crack growth and require the knowledge of fatigue constant for the parent glass employed in the LCD displays.

NOTE 2 Refer to [9] to [12] in the bibliography for further information.

3.5
parent glass
sheet glass used as raw material for manufacturing of LCD panels and modules

4 Abbreviated terms

For the purposes of this document, the following abbreviations apply.

FC	filled cell
FEA	finite element analysis
FPD	flat panel display
LCD	liquid crystal display
MC	mirror constant
MR	mirror radius
ROR	ring on ring
SCSC	stress corrosion susceptibility constant
VBT	vertical bend test

5 Apparatus

5.1 General

The parameters in the following figures are used in the stress formulas of Clause 8. The dimensions are:

load (force), in newtons (N),

dimensions, in millimetres (mm),

stress, in megapascals (MPa).

The standard atmospheric conditions in IEC 61747-5, 1.4.3, shall apply, except that the relative humidity shall be in excess of 95 % (vapour) unless otherwise specifically agreed between the customer and the supplier.

NOTE In general, humidity can affect the measured strength, with higher humidity leading to decreased strength values. For this reason, as well as to ensure consistency and reproducibility, the humidity level is stated at the highest practical level.

Documents
Document Sharing Hub

Full document details: IEC 61747-5-3 2009

5.2 Method A: Quasistatic biaxial strength

The quasistatic biaxial strength of parent glass is measured in the ring on ring (ROR) fixture as shown in Figure 1. The dimensions of load and support rings are selected so as to minimize large deflection and the associated membrane stress, especially for ultra-thin glass, although the effect of such non-linearities on strength can be quantified using finite element analysis (FEA), see the bibliographical references [21] to [24]. All ring surfaces in contact with the test specimens should be rounded, with radii of 2 to 3 times the thickness of the glass specimen. In general, certain trade-offs are necessary in designing the test specimen and ROR fixture because the key objective is to measure quasistatic strength of as large a test area as possible without introducing large nonlinearities. Alternatively a large sample quantity is required to obtain the strength distribution representative of full size module. Since the strength of glass surface is primarily dictated by the quality of that surface, i.e., surface defects, it is imperative to measure the biaxial strength of those surfaces that have been exposed to handling and processing damage during the fabrication of LCD devices. Such data are then a good representation of LCD module strength.

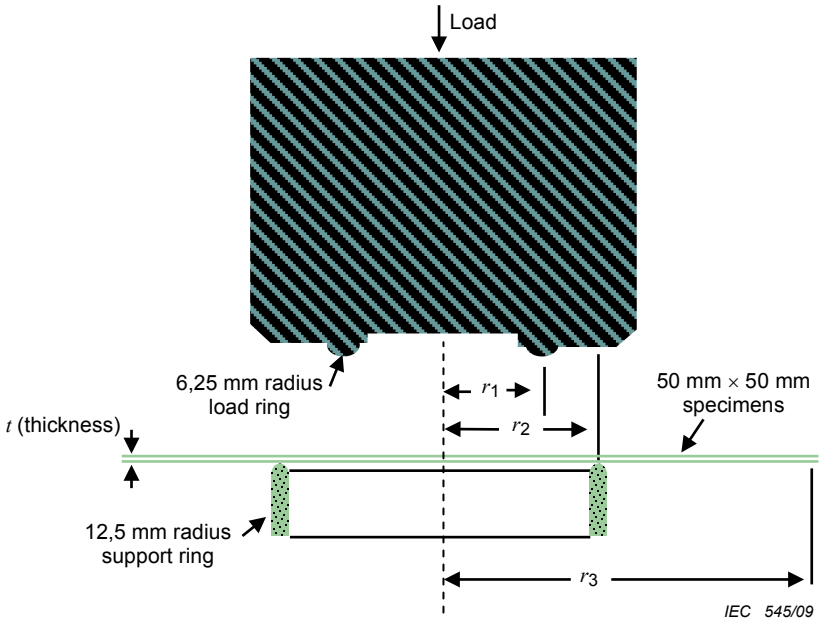

Figure 1 – Schematic of ROR test fixture for measuring biaxial strength of parent glass

For square specimens, the specimen radius, r_3, is the average of the inscribed and circumscribed circles.

5.3 Method B: Quasistatic edge strength (parent glass)

Quasistatic strength of the edges of parent glass is measured in the VBT fixture shown in Figure 2. The dimensions of glass specimen and test fixture are so chosen as to minimize buckling of the top edge which is in compression during the test because the load is applied from the top. As in the case of surface strength it is equally imperative that the edges of glass specimens should have been exposed to handling and processing damage during the fabrication of LCD devices. In addition the glass specimen should be large enough to represent the full-size module.

Documents
Document Sharing Hub
Full document details: IEC 61747-5-3 2009

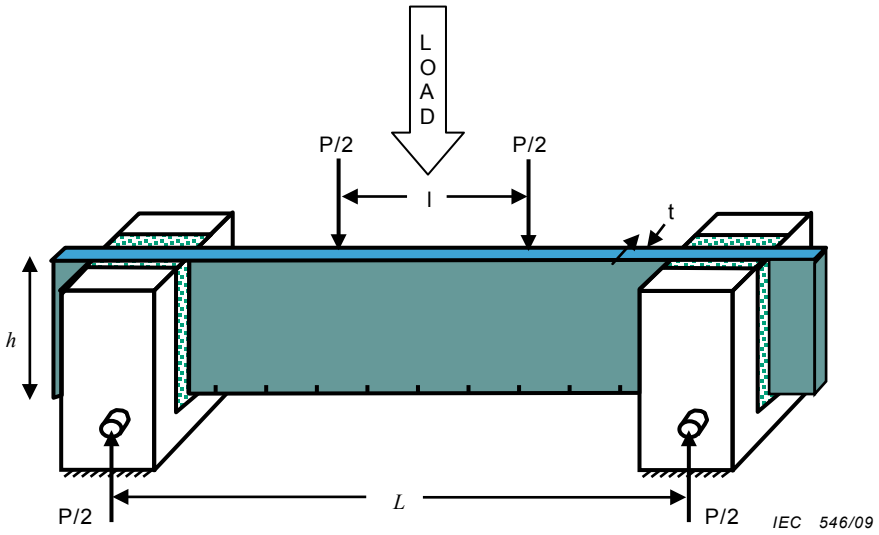

Figure 2 – Vertical bend test fixture for measuring the edge strength of parent glass

5.4 Method C: Quasistatic strength (module)

The quasistatic strength of full size module is measured by supporting it on the mounting points and loading it at the centre as shown in Figure 3. The loading point of the test fixture is rounded and may be padded to avoid inducing additional flaws on the glass surface. Several modules are tested in this manner to obtain a statistically significant strength distribution representative of surface damage induced by handling, processing and fabrication of LCD module. These data are also useful for estimating the module strength at orders of magnitude lower failure probabilities. The same apparatus may also be used for loading the LCD module off-centre and obtaining its strength at different locations.

Documents
Document Sharing Hub
Full document details: IEC 61747-5-3 2009

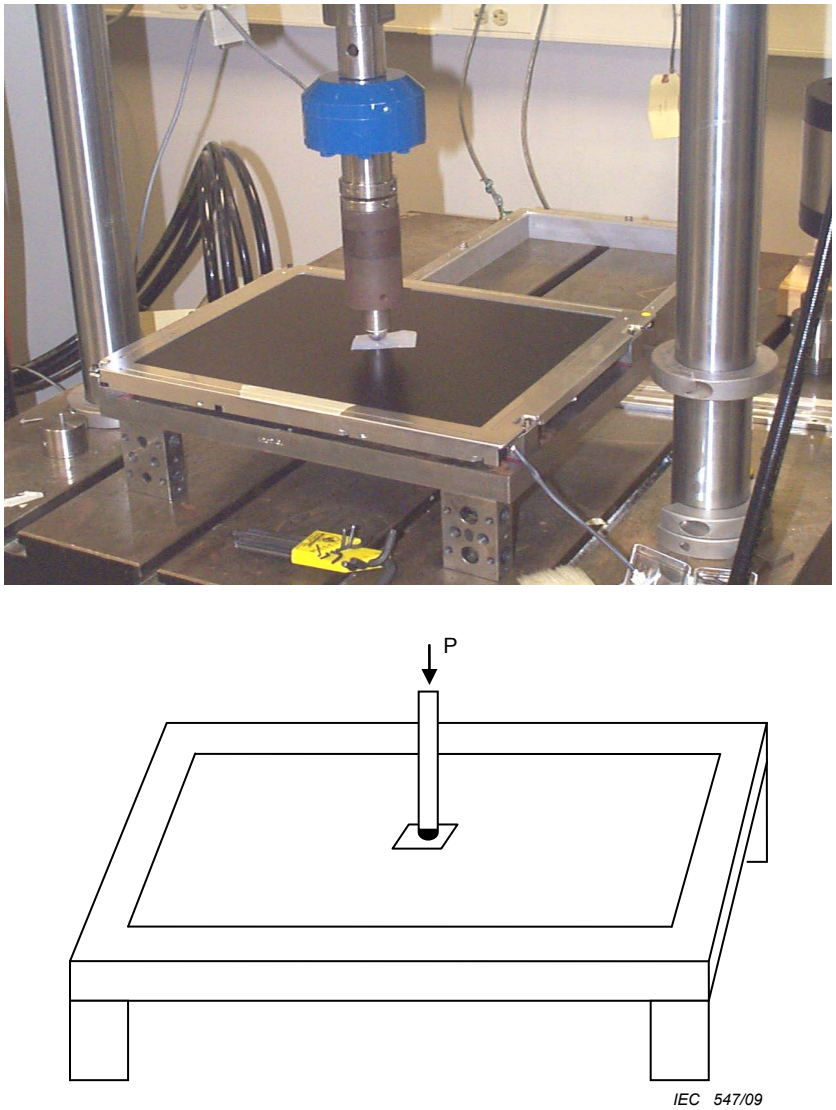

Figure 3 – Photograph and schematic of strength measurement for full-size LCD module

5.5 Method D: Fatigue constant

The fatigue constant of parent glass is obtained by measuring its biaxial strength at four, or more, different stress rates, each successive rate being one order of magnitude lower, using the ROR fixture shown in Figure 1. A sample quantity of at least 25 specimens shall be used at each of the stress rates to obtain a reliable value of fatigue constant. The specimens used for this measurement should also have been exposed to handling and processing damage representative of manufacturing of FC and LCD modules.

6 Test sample

6.1 General

Samples shall be representative of normal processes. The sample sizes indicated below are minimal. Larger sample sizes will yield more accurate lifetime estimates.

Documents
Document Sharing Hub
Full document details: IEC 61747-5-3 2009

6.2 Parent glass

A sample size of at least 50 specimens, each 50 mm × 50 mm, shall be used for measuring quasistatic biaxial strength (see 5.2) of parent glass. A similar sample size shall be used for characterizing abraded glass which simulates handling and processing damage.

The fatigue measurements are also carried out on 50 mm × 50 mm specimens prepared from abraded glass. A sample size of at least 25 specimens shall be used at each of the stress rates to obtain a fatigue constant value from regression analysis of strength versus stress rate data.

6.3 Full size module

Full size modules and filled cells can range small to very large diagonal dimensions. In all cases a minimum sample quantity of at least 25 filled cells or modules shall be used for measuring biaxial strength under static loading (see 5.4). Such data then help determine module strength at orders of magnitude lower failure probabilities.

Similarly, a sample quantity of at least 25 filled cells shall be used for measuring the edge strength via the apparatus shown in Figure 2

7 Procedure: Quasistatic loading

The loading rate or crosshead speed for measuring the strength of either parent glass or filled cell or full size module is so chosen as to complete the measurement in 30 s to 45 s. The loading rate or crosshead speed shall be kept constant during this measurement.

8 Stress calculations

8.1 General

Stress calculations are used to normalize the load at failure to common stress units. This normalization takes into account differences in glass material, dimensions, and some design characteristics. For specimens of a common design and dimension, the failure load and pressure rate can be substituted for failure stress and stress rate formulas of Clause 9. Poisson's ratio, ν, is a material property that is normally available from the material supplier, but may be verified with material tests.

8.2 Quasistatic biaxial failure stress (parent glass)

The strength of 50 mm × 50 mm specimens of parent glass tested in ROR fixture is calculated from Equation (1).

$$\sigma_{max} = [3P/4\pi t^2]\times[2(1+\nu)\ln(r_2/r_1) + (1-\nu)(r_2/r_3)^2(1-r_1^2/r_2^2)] \quad (1)$$

where

σ_{max} is the stress at failure,

P is the failure load,

t is the glass thickness,

ν is the Poisson's ratio,

r_2 is the radius of support ring,

r_1 is the radius of the load ring, and

r_3 is the radius of the specimen.

Documents
Document Sharing Hub
Full document details: IEC 61747-5-3 2009