IEC 61753-071-02

Edition 1.1 2024-02
CONSOLIDATED VERSION

INTERNATIONAL STANDARD

NORME INTERNATIONALE

colour inside

Fibre optic interconnecting devices and passive components – Performance standard –
Part 071-02: Non-connectorized single-mode fibre optic 1 × 2 and 2 × 2 spatial switches for category C – Controlled environments

Dispositifs d'interconnexion et composants passifs fibroniques – Norme de performance –
Partie 071-02: Commutateurs spatiaux optiques unimodaux 1 x 2 et 2 x 2 non connectorisés pour la catégorie C – Environnements contrôlés

IEC 61753-071-02:2020-02+AMD1:2024-02 CSV(en-fr)

Documents
Document Sharing Hub

Full document details: IEC 61753-071-02-2024

THIS PUBLICATION IS COPYRIGHT PROTECTED
Copyright © 2024 IEC, Geneva, Switzerland

All rights reserved. Unless otherwise specified, no part of this publication may be reproduced or utilized in any form or by any means, electronic or mechanical, including photocopying and microfilm, without permission in writing from either IEC or IEC's member National Committee in the country of the requester. If you have any questions about IEC copyright or have an enquiry about obtaining additional rights to this publication, please contact the address below or your local IEC member National Committee for further information.

Droits de reproduction réservés. Sauf indication contraire, aucune partie de cette publication ne peut être reproduite ni utilisée sous quelque forme que ce soit et par aucun procédé, électronique ou mécanique, y compris la photocopie et les microfilms, sans l'accord écrit de l'IEC ou du Comité national de l'IEC du pays du demandeur. Si vous avez des questions sur le copyright de l'IEC ou si vous désirez obtenir des droits supplémentaires sur cette publication, utilisez les coordonnées ci-après ou contactez le Comité national de l'IEC de votre pays de résidence.

IEC Secretariat
3, rue de Varembé
CH-1211 Geneva 20
Switzerland

Tel.: +41 22 919 02 11
info@iec.ch
www.iec.ch

About the IEC
The International Electrotechnical Commission (IEC) is the leading global organization that prepares and publishes International Standards for all electrical, electronic and related technologies.

About IEC publications
The technical content of IEC publications is kept under constant review by the IEC. Please make sure that you have the latest edition, a corrigendum or an amendment might have been published.

IEC publications search - webstore.iec.ch/advsearchform
The advanced search enables to find IEC publications by a variety of criteria (reference number, text, technical committee, …). It also gives information on projects, replaced and withdrawn publications.

IEC Just Published - webstore.iec.ch/justpublished
Stay up to date on all new IEC publications. Just Published details all new publications released. Available online and once a month by email.

IEC Customer Service Centre - webstore.iec.ch/csc
If you wish to give us your feedback on this publication or need further assistance, please contact the Customer Service Centre: sales@iec.ch.

IEC Products & Services Portal - products.iec.ch
Discover our powerful search engine and read freely all the publications previews, graphical symbols and the glossary. With a subscription you will always have access to up to date content tailored to your needs.

Electropedia - www.electropedia.org
The world's leading online dictionary on electrotechnology, containing more than 22 500 terminological entries in English and French, with equivalent terms in 25 additional languages. Also known as the International Electrotechnical Vocabulary (IEV) online.

A propos de l'IEC
La Commission Electrotechnique Internationale (IEC) est la première organisation mondiale qui élabore et publie des Normes internationales pour tout ce qui a trait à l'électricité, à l'électronique et aux technologies apparentées.

A propos des publications IEC
Le contenu technique des publications IEC est constamment revu. Veuillez vous assurer que vous possédez l'édition la plus récente, un corrigendum ou amendement peut avoir été publié.

Recherche de publications IEC - webstore.iec.ch/advsearchform
La recherche avancée permet de trouver des publications IEC en utilisant différents critères (numéro de référence, texte, comité d'études, …). Elle donne aussi des informations sur les projets et les publications remplacées ou retirées.

IEC Just Published - webstore.iec.ch/justpublished
Restez informé sur les nouvelles publications IEC. Just Published détaille les nouvelles publications parues. Disponible en ligne et une fois par mois par email.

Service Clients - webstore.iec.ch/csc
Si vous désirez nous donner des commentaires sur cette publication ou si vous avez des questions contactez-nous: sales@iec.ch.

IEC Products & Services Portal - products.iec.ch
Découvrez notre puissant moteur de recherche et consultez gratuitement tous les aperçus des publications, symboles graphiques et le glossaire. Avec un abonnement, vous aurez toujours accès à un contenu à jour adapté à vos besoins.

Electropedia - www.electropedia.org
Le premier dictionnaire d'électrotechnologie en ligne au monde, avec plus de 22 500 articles terminologiques en anglais et en français, ainsi que les termes équivalents dans 25 langues additionnelles. Egalement appelé Vocabulaire Electrotechnique International (IEV) en ligne.

AVA Documents
Document Sharing Hub

Full document details: IEC 61753-071-02-2024

IEC 61753-071-02

Edition 1.1 2024-02
CONSOLIDATED VERSION

INTERNATIONAL STANDARD

NORME INTERNATIONALE

colour inside

Fibre optic interconnecting devices and passive components – Performance standard –
Part 071-02: Non-connectorized single-mode fibre optic 1 × 2 and 2 × 2 spatial switches for category C – Controlled environments

Dispositifs d'interconnexion et composants passifs fibroniques – Norme de performance –
Partie 071-02: Commutateurs spatiaux optiques unimodaux 1 x 2 et 2 x 2 non connectorisés pour la catégorie C – Environnements contrôlés

INTERNATIONAL
ELECTROTECHNICAL
COMMISSION

COMMISSION
ELECTROTECHNIQUE
INTERNATIONALE

ICS 33.180.20

ISBN 978-2-8322-8372-1

Warning! Make sure that you obtained this publication from an authorized distributor.
Attention! Veuillez vous assurer que vous avez obtenu cette publication via un distributeur agréé.

AVA Documents
Document Sharing Hub

® Registered trademark of the International Electrotechnical Commission
Marque déposée de la Commission Electrotechnique Internationale

Full document details: IEC 61753-071-02-2024

Documents
Document Sharing Hub

Full document details: IEC 61753-071-02-2024

IEC 61753-071-02

Edition 1.1 2024-02
CONSOLIDATED VERSION

REDLINE VERSION

VERSION REDLINE

colour inside

Fibre optic interconnecting devices and passive components – Performance standard –
Part 071-02: Non-connectorized single-mode fibre optic 1 × 2 and 2 × 2 spatial switches for category C – Controlled environments

Dispositifs d'interconnexion et composants passifs fibroniques – Norme de performance –
Partie 071-02: Commutateurs spatiaux optiques unimodaux 1 x 2 et 2 x 2 non connectorisés pour la catégorie C – Environnements contrôlés

IEC 61753-071-02:2020-02+AMD1:2024-02 CSV(en-fr)

Documents
Document Sharing Hub

Full document details: IEC 61753-071-02-2024

CONTENTS

FOREWORD 3
1 Scope 5
2 Normative references 5
3 Terms and definitions 6
4 Test conditions 8
5 Test report 9
6 Performance requirements 9
6.1 Dimensions 9
6.2 Sample size 9
6.3 Test details and requirements 9
Annex A (normative) Sample size 13
Bibliography 14

Figure 1 – Configuration of 1 × 2 spatial switch 7
Figure 2 – Configuration of 2 × 2 spatial switch, non-crossover type 7
Figure 3 – Configuration of 2 × 2 spatial switch, crossover type 8

Table 1 – Single-mode spectral bands 8
Table 2 – Test details and requirements for category C 9
Table A.1 – Number of samples for each test 13

Documents
Document Sharing Hub
Full document details: IEC 61753-071-02-2024

INTERNATIONAL ELECTROTECHNICAL COMMISSION

FIBRE OPTIC INTERCONNECTING DEVICES AND PASSIVE COMPONENTS – PERFORMANCE STANDARD –

Part 071-02: Non-connectorized single-mode fibre optic 1 × 2 and 2 × 2 spatial switches for category C – Controlled environments

FOREWORD

1) The International Electrotechnical Commission (IEC) is a worldwide organization for standardization comprising all national electrotechnical committees (IEC National Committees). The object of IEC is to promote international co-operation on all questions concerning standardization in the electrical and electronic fields. To this end and in addition to other activities, IEC publishes International Standards, Technical Specifications, Technical Reports, Publicly Available Specifications (PAS) and Guides (hereafter referred to as "IEC Publication(s)"). Their preparation is entrusted to technical committees; any IEC National Committee interested in the subject dealt with may participate in this preparatory work. International, governmental and non-governmental organizations liaising with the IEC also participate in this preparation. IEC collaborates closely with the International Organization for Standardization (ISO) in accordance with conditions determined by agreement between the two organizations.
2) The formal decisions or agreements of IEC on technical matters express, as nearly as possible, an international consensus of opinion on the relevant subjects since each technical committee has representation from all interested IEC National Committees.
3) IEC Publications have the form of recommendations for international use and are accepted by IEC National Committees in that sense. While all reasonable efforts are made to ensure that the technical content of IEC Publications is accurate, IEC cannot be held responsible for the way in which they are used or for any misinterpretation by any end user.
4) In order to promote international uniformity, IEC National Committees undertake to apply IEC Publications transparently to the maximum extent possible in their national and regional publications. Any divergence between any IEC Publication and the corresponding national or regional publication shall be clearly indicated in the latter.
5) IEC itself does not provide any attestation of conformity. Independent certification bodies provide conformity assessment services and, in some areas, access to IEC marks of conformity. IEC is not responsible for any services carried out by independent certification bodies.
6) All users should ensure that they have the latest edition of this publication.
7) No liability shall attach to IEC or its directors, employees, servants or agents including individual experts and members of its technical committees and IEC National Committees for any personal injury, property damage or other damage of any nature whatsoever, whether direct or indirect, or for costs (including legal fees) and expenses arising out of the publication, use of, or reliance upon, this IEC Publication or any other IEC Publications.
8) Attention is drawn to the Normative references cited in this publication. Use of the referenced publications is indispensable for the correct application of this publication.
9) Attention is drawn to the possibility that some of the elements of this IEC Publication may be the subject of patent rights. IEC shall not be held responsible for identifying any or all such patent rights.

This consolidated version of the official IEC Standard and its amendment has been prepared for user convenience.

IEC 61753-071-02 edition 1.1 contains the first edition (2020-02) [documents 86B/4324/FDIS and 86B/4334/RVD] and its amendment 1 (2024-02) [documents 86B/4780/CDV and 86B/4830/RVC].

In this Redline version, a vertical line in the margin shows where the technical content is modified by amendment 1. Additions are in green text, deletions are in strikethrough red text. A separate Final version with all changes accepted is available in this publication.

Documents
Document Sharing Hub

Full document details: IEC 61753-071-02-2024

International Standard IEC 61753-071-02 has been prepared by subcommittee SC 86B: Fibre optic interconnecting devices and passive components, of IEC technical committee TC 86: Fibre optics.

This first edition constitutes a technical revision.

This edition includes the following significant technical changes with respect to IEC 61753-071-2:2014.

a) addition of performance requirements of repeatability and switching durability;
b) deleting of performance requirements of directivity;
c) deleting of test of operational shock;
d) change of performance requirements of switching time;
e) change of test condition of high optical power;
f) harmonization of the test conditions with IEC 61753-1:2018.

This document has been drafted in accordance with the ISO/IEC Directives, Part 2.

A list of all parts in the IEC 61753 series, published under the general title *Fibre optic interconnecting devices and passive components – Performance standard,* can be found on the IEC website.

The committee has decided that the contents of this document and its amendment will remain unchanged until the stability date indicated on the IEC website under webstore.iec.ch in the data related to the specific document. At this date, the document will be

- reconfirmed,
- withdrawn, or
- revised.

IMPORTANT – The *'colour inside'* logo on the cover page of this publication indicates that it contains colours which are considered to be useful for the correct understanding of its contents. Users should therefore print this document using a colour printer.

Documents
Document Sharing Hub

Full document details: IEC 61753-071-02-2024

FIBRE OPTIC INTERCONNECTING DEVICES AND PASSIVE COMPONENTS – PERFORMANCE STANDARD –

Part 071-02: Non-connectorized single-mode fibre optic 1 × 2 and 2 × 2 spatial switches for category C – Controlled environments

1 Scope

This part of IEC 61753 contains the minimum initial test and measurement requirements and severities which non-connectorized single-mode fibre optic 1 × 2 and 2 × 2 spatial switches need to satisfy in order to be categorized as meeting the requirements of category C – controlled environments, as defined in Annex A of IEC 61753-1:2018.

2 Normative references

The following documents are referred to in the text in such a way that some or all of their content constitutes requirements of this document. For dated references, only the edition cited applies. For undated references, the latest edition of the referenced document (including any amendments) applies.

IEC 60068-2-27:2008, *Environmental testing – Part 2-27: Tests – Test Ea and guidance: Shock*

IEC 60793-2-50, *Optical fibres – Part 2-50: Product specifications – Sectional specification for class B single-mode fibres*

IEC 60794-2-50, *Optical fibre cables – Part 2-50: Indoor fibre cables – Family specification for simplex and duplex cables for use in terminated cable assemblies*

IEC 60876-1, *Fibre optic interconnecting devices and passive components – Fibre optic spatial switches – Part 1: Generic specification*

IEC 61300 (all parts), *Fibre optic interconnecting devices and passive components – Basic test and measurement procedures*

IEC 61300-2-1, *Fibre optic interconnecting devices and passive components – Basic test and measurement procedures – Part 2-1: Tests – Vibration (sinusoidal)*

IEC 61300-2-4, *Fibre optic interconnecting devices and passive components – Basic test and measurement procedures – Part 2-4: Tests – Fibre or cable retention*

IEC 61300-2-5, *Fibre optic interconnecting devices and passive components – Basic test and measurement procedures – Part 2-5: Tests – Torsion*

IEC 61300-2-9, *Fibre optic interconnecting devices and passive components – Basic test and measurement procedures – Part 2-9: Tests – Shock*

IEC 61300-2-14, *Fibre optic interconnecting devices and passive components – Basic test and measurement procedures – Part 2-14: Tests – High optical power*

IEC 61300-2-17, *Fibre optic interconnecting devices and passive components – Basic test and measurement procedures – Part 2-17: Tests – Cold*

AVA Documents
Document Sharing Hub

Full document details: IEC 61753-071-02-2024

IEC 61300-2-18, *Fibre optic interconnecting devices and passive components – Basic test and measurement procedures – Part 2-18: Tests – Dry heat – High temperature endurance*

IEC 61300-2-19, *Fibre optic interconnecting devices and passive components – Basic test and measurement procedures – Part 2-19: Tests – Damp heat (steady state)*

IEC 61300-2-22, *Fibre optic interconnecting devices and passive components – Basic test and measurement procedures – Part 2-22: Tests – Change of temperature*

IEC 61300-2-42, *Fibre optic interconnecting devices and passive components – Basic test and measurement procedures – Part 2-42: Tests – Static side load for strain relief*

IEC 61300-2-44, *Fibre optic interconnecting devices and passive components – Basic test and measurement procedures – Part 2-44: Tests – Flexing of the strain relief of fibre optic devices*

IEC 61300-3-2, *Fibre optic interconnecting devices and passive components – Basic test and measurement procedures – Part 3-2: Examination and measurements – Polarization dependent loss in a single-mode fibre optic device*

IEC 61300-3-6, *Fibre optic interconnecting devices and passive components – Basic test and measurement procedures – Part 3-6: Examinations and measurements – Return loss*

IEC 61300-3-7, *Fibre optic interconnecting devices and passive components – Basic test and measurement procedures – Part 3-7: Examinations and measurements – Wavelength dependence of attenuation and return loss of single mode components*

IEC 61300-3-21, *Fibre optic interconnecting devices and passive components – Basic test and measurement procedures – Part 3-21: Examinations and measurements – Switching time*

IEC 61300-3-28, *Fibre optic interconnecting devices and passive components – Basic test and measurement procedures – Part 3-28: Examinations and measurements – Transient loss*

IEC 61300-3-50, *Fibre optic interconnecting devices and passive components – Basic test and measurement procedures – Part 3-50: Examinations and measurements – Crosstalk for optical spatial switches*

IEC TS 62627-09, *Fibre optic interconnecting devices and passive components – Vocabulary for passive optical devices*

3 Terms and definitions

For the purposes of this document, terms and definitions given in IEC 60876-1, IEC TS 62627-09 and the following apply.

ISO and IEC maintain terminological databases for use in standardization at the following addresses:

- IEC Electropedia: available at http://www.electropedia.org/
- ISO Online browsing platform: available at http://www.iso.org/obp

3.1
single-mode fibre-pigtailed 1 × 2 spatial switch
single-mode fibre-pigtailed spatial switch which has one input port and two output ports, and vice versa

Note 1 to entry: 1 × 2 spatial optical switch is bidirectional (reciprocal).

Documents
Document Sharing Hub

Full document details: IEC 61753-071-02-2024

Note 2 to entry: Figure 1 shows the basic configuration of 1 × 2 spatial switch.

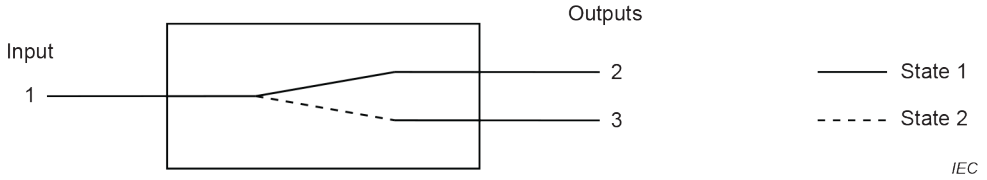

Key

1, 2, 3 port numbers

Figure 1 – Configuration of 1 × 2 spatial switch

3.2
single-mode fibre-pigtailed 2 × 2 spatial switch
single-mode fibre-pigtailed spatial switch which has two input ports and two output ports

Note 1 to entry: There are two types of these switches: non-crossover type and crossover type.

3.3
single-mode fibre-pigtailed 2 × 2 non-crossover type spatial switch
single-mode fibre-pigtailed 2 × 2 spatial switch which has four switching states and two pairs of two ports switch independently

Note 1 to entry: ~~See Figure 2.~~ Figure 2 shows possible switching states of the 2 x 2 spatial switch. Switching can be done arbitrarily between the states shown in Figure 2.

Note 2 to entry: The state 1 and state 4, and state 3 and state 4 can be switched spontaneously.

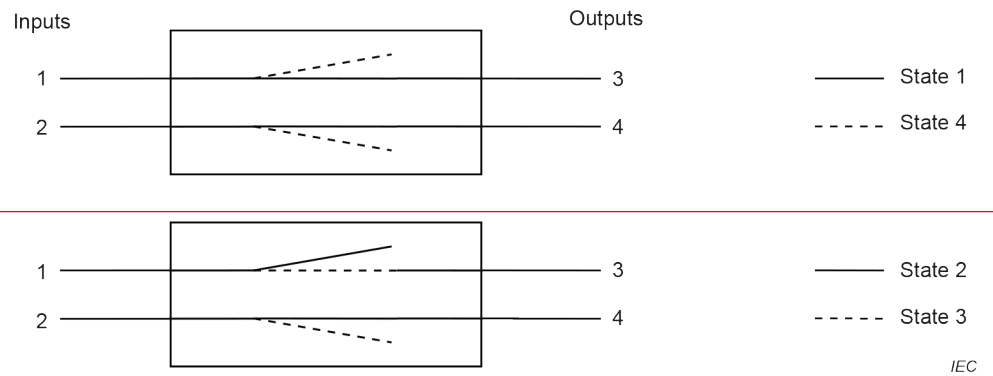

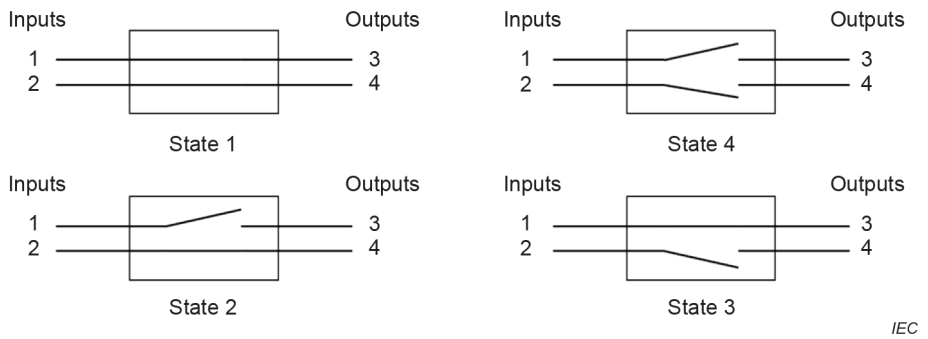

Key

1, 2, 3, 4 port numbers

Figure 2 – Configuration of 2 × 2 spatial switch, non-crossover type

AVA Documents
Document Sharing Hub
Full document details: IEC 61753-071-02-2024

3.4
single-mode fibre-pigtailed 2 × 2 crossover type spatial switch
single-mode fibre-pigtailed 2 × 2 spatial switch which has two switching states of bar state and cross state

Note 1 to entry: See Figure 3.

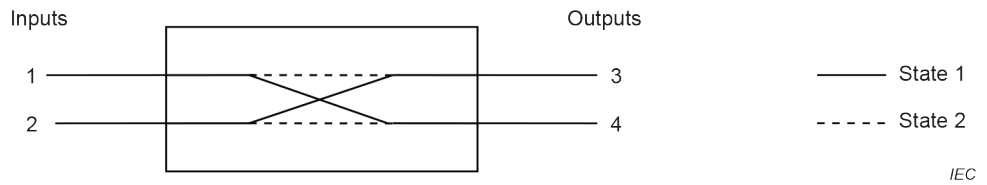

Key

1, 2, 3, 4 port numbers

Figure 3 – Configuration of 2 × 2 spatial switch, crossover type

3.5
operating vibration
vibration test whose relevant parameters should be monitored during the test

4 Test conditions

Unless otherwise specified, all test methods shall be in accordance with IEC 61300 (all parts). 1 × 2 and 2 × 2 spatial switches used for each test are intended to be previously unstressed new samples but may also be selected from previously used samples if desired. All measurements shall be carried out under standard atmospheric conditions, unless otherwise stated. If the device is provided with an active temperature control, this shall be set at the set-point specified by the manufacturer.

The requirements apply to every combination of input and output port.

The samples shall be terminated onto single-mode fibres as per IEC 60793-2-50 category B-652.B, B-652.D or B-657 in either coated fibres (primary and secondary) or reinforced cable format as per IEC 60794-2-50.

Table 1 is intended to provide guidance on the wavelength ranges of the various spectral bands. It is not intended to serve as a specification. Values of operating wavelength used in performance verification shall be specified between the customer and supplier or shall be as defined in the manufacturer's specification.

Table 1 – Single-mode spectral bands

Band	Descriptor	Range nm
O-band	Original	1 260 to 1 360
E-band	Extended	1 360 to 1 460
S-band	Short wavelength	1 460 to 1 530
C-band	Conventional	1 530 to 1 565
L-band	Long wavelength	1 565 to 1 625
U-band	Ultralong wavelength	1 625 to 1 675
NOTE See ITU-T G. Supplement 39.		

Documents
Document Sharing Hub
Full document details: IEC 61753-071-02-2024

5 Test report

Fully documented test reports and supporting evidence shall be prepared and be available for inspection as evidence that the tests have been carried out and complied with.

6 Performance requirements

6.1 Dimensions

Dimensions shall comply with those given in appropriate manufacturers' drawings.

6.2 Sample size

Sample sizes for the tests are defined in Table A.1 of Annex A.

6.3 Test details and requirements

The requirements are given only for pigtailed 1 × 2 and 2 × 2 spatial switches. The test details and requirements for category C are shown in Table 2.

Table 2 – Test details and requirements for category C

No	Tests	Requirements	Details	
1	Insertion loss (attenuation) IEC 61300-3-7	≤ 1,0 dB	Launch fibre length Light source type Measurement uncertainty	≥ 2,0 m Unpolarized light ≤ 0,1 dB
2	Crosstalk IEC 61300-3-50	≤ –50 dB	Launch fibre length	≥ 2,0 m
			Light source type	Unpolarized light
			Measurement uncertainty	≤ 1 dB
3	Return loss IEC 61300-3-7	≥ 50 dB	Launch fibre length Light source type Measurement uncertainty	≥ 2,0 m Unpolarized light ≤ 2 dB
4	Switching time IEC 61300-3-21	≤ 20 ms	Launch fibre length Switching states Port configurations Measurement uncertainty	≥ 2,0 m Both for from conducting state to isolated state and from isolated state to conducting state shall be measured. All port configurations shall be measured. ≤ 1 ms
			For crossover type, the switching time shall be the maximum switching time of two ports.	
5	Polarization dependent loss (PDL) IEC 61300-3-2	≤ 0,1 dB	Launch fibre length Port configurations Measurement uncertainty	≥ 2,0 m All port configurations shall be measured. ≤ 0,02 dB

Documents
Document Sharing Hub
Full document details: IEC 61753-071-02-2024

No	Tests	Requirements	Details	
6	Insertion loss (attenuation) repeatability Method under consideration	≤ 0,1 dB	Launch fibre length Port configurations Number of switching Calculation Measurement uncertainty	≥ 2,0 m All port configurations shall be measured. Minimum 10 Differences of the maximum insertion loss and the minimum loss, or 6 times of standard deviation. ≤ 0,05 dB
7	Return loss repeatability IEC 61300-3-6	≥ 50 dB	Launch fibre length Port configurations Number of switching Calculation Measurement uncertainty	≥ 2,0 m All port configurations shall be measured. Minimum 10 The minimum return loss. ≤ 1 dB
8	Crosstalk repeatability IEC 61300-3-50	≤ –50 dB	Launch fibre length Port configurations Number of switching Calculation Measurement uncertainty	≥ 2,0 m All port configurations shall be measured. Minimum 10 The maximum crosstalk ≤ 1 dB
9	Switching durability Method under consideration	Under consideration.	Number of switching Test condition	Under consideration Under consideration
10	High optical power IEC 61300-2-14	Before and after the test, the limits of insertion loss, cross talk and return loss of test no. 1, 2 and 3 shall be met. During the test, the insertion loss change is monitored. During and after the test, the insertion loss change shall be within ±0,3 dB of the initial value. During the test, the crosstalk change is monitored. The sum of the initial value and the change of the crosstalk shall be within the value defined at test no. 2. During the test, the return loss change is monitored. The sum of the initial value and the change of the return loss shall be within the value defined at test no. 3.	Optical power Wavelength Duration of the optical power exposure Temperature Relative humidity	300 mW Nominal wavelength (see Table 1) 30 min 60 °C ± 2 °C 93 % $^{+2}_{-3}$ % RH
11	Cold IEC 61300-2-17	Before and after the test, the limits of insertion loss, crosstalk and return loss of test no.1, 2 and 3 shall be met. The insertion loss change during the test shall be within ±0,3 dB of the initial value.	Temperature Duration of exposure	–10 °C ± 2 °C 96 h

Documents
Document Sharing Hub
Full document details: IEC 61753-071-02-2024

No	Tests	Requirements	Details	
12	High temperature endurance IEC 61300-2-18	Before and after the test, the limits of insertion loss, crosstalk and return loss of test no.1, 2 and 3 shall be met. The insertion loss change during the test shall be within ±0,3 dB of the initial value.	Temperature: Duration of exposure	+ 60 °C ± 2 °C 96 h
13	Damp heat (steady state) IEC 61300-2-19	Before and after the test, the limits of insertion loss, crosstalk and return loss of test no.1, 2 and 3 shall be met. The insertion loss change during the test shall be within ±0,3 dB of the initial value.	Temperature Relative humidity Duration of exposure	+ 40 °C ± 2 °C 93 $^{+2}_{-3}$ % RH 96 h
14	Change of temperature IEC 61300-2-22	Before and after the test, the limits of insertion loss, crosstalk and return loss of test no.1, 2 and 3 shall be met. During the test, the insertion loss change shall be within ±0,3 dB of the initial value. During the test, the crosstalk change is monitored. The sum of the initial value and the change of the crosstalk shall be within the value defined at test no.2.	High temperature Low temperature Number of cycles Duration at extreme temperature Rate of change	+60 °C ± 2 °C –10 °C ± 2 °C 5 60 min 1 °C/min
15	Vibration IEC 61300-2-1	Before and after the test, the limits of insertion loss, crosstalk and return loss of test no.1, 2 and 3 shall be met. The insertion loss change during the test shall be within ±0,3 dB of the initial value.	Frequency range Number of axes Number of sweeps Sweep rate Amplitude	10 Hz to 55 Hz 3 orthogonal axes 15 /axis 1 sweep: 10 Hz to 55 Hz to 10 Hz 1 octave/min 0,75 mm
16	Optical fibre cable flexing IEC 61300-2-44	Before and after the test, the limits of insertion loss, crosstalk and return loss of test no.1, 2 and 3 shall be met. The insertion loss change during the test shall be within ±0,3 dB of the initial value.	Tensile force Angle Number of cycles	2 N for reinforced cable ±90° 50 cycles
17	Fibre or cable retention IEC 61300-2-4	Before and after the test, the limits of insertion loss, crosstalk and return loss of test no.1, 2 and 3 shall be met. The insertion loss change during the test shall be within ±0,3 dB of the initial value.	Magnitude and rate of application Duration of the test	10 N ± 1 N at 5 N/s for reinforced cables 5,0 N ± 0,5 N at 0,5 N/s for secondary coated fibres 2,0 N ± 0,2 N at 0,5 N/s for primary coated fibres 60 s
18	Torsion IEC 61300-2-5	Before and after the test, the limits of insertion loss, crosstalk and return loss of test no.1, 2 and 3 shall be met. The insertion loss change duringr the test shall be within ±0,3 dB of the initial value.	Load Angle Number of cycles Fibre/cable clamping distance	5 N ± 0,5 N at 5 N/s for reinforced cables 2,0 N ± 0,2 N at 0,5 N/s for secondary coated fibres ±180° 10 25 cm ± 5 cm

Documents
Document Sharing Hub
Full document details: IEC 61753-071-02-2024

No	Tests	Requirements	Details	
19	Static side load IEC 61300-2-42	Before and after the test, the limits of insertion loss, crosstalk and return loss of test no.1, 2 and 3 shall be met. The insertion loss change during the test shall be within ±0,3 dB of the initial value.	Magnitude and duration of the tensile load Direction of application	1 N for 1 h for reinforced cable 0,2 N for 5 min for secondary coated fibres Two mutually perpendicular directions
20	Shock IEC 61300-2-9	Before and after the test, the limits of insertion loss, crosstalk and return loss of test no.1, 2 and 3 shall be met.	Acceleration Duration Number of axis Number of shocks	Components: 5 000 m/s^2 Modules: 0,125 kg < module mass ≤ 0,225 kg: 2 000 m/s^2 0,225 kg < module mass ≤ 1 kg: 500 m/s^2 Refer IEC 60068-2-27:2008, Table 1. 3 axes in 2 directions 2 shocks per axis, 12 shocks in total
21	Operating vibration IEC 61300-2-1	During the test the insertion loss shall be within ±0,3 dB of initial value under ambient environmental conditions. The insertion loss shall be measured by IEC 61300-3-28.	Frequency range Acceleration Sweeps Note	5 Hz to 50 Hz 9,8 m/s^2 2 sweeps/direction The test condition is based on IEC 62343-1.

Documents
Document Sharing Hub
Full document details: IEC 61753-071-02-2024

Annex A
(normative)

Sample size

The number of samples to be evaluated for each test is defined in the sample size column in Table A.1 for category C.

Table A.1 – Number of samples for each test

No	Test	Sample size
1	Insertion loss	12
2	Crosstalk	12
3	Return loss	12
4	Switching time	12
5	Polarization dependent loss (PDL)	12
6	Insertion repeatability	12
7	Return loss repeatability	12
8	Crosstalk repeatability	12
9	Switching durability	6
10	High optical power	6
11	Cold	6
12	High temperature endurance	6
13	Damp heat (steady state)	6
14	Change of temperature	6
15	Vibration (sinusoidal)	6
16	Optical fibre cable flexing	6
17	Fibre or cable retention	6
18	Torsion	6
19	Static side load	6
20	Shock	6
21	Operating vibration	3

Documents
Document Sharing Hub
Full document details: IEC 61753-071-02-2024

Bibliography

IEC 61300-3-3, *Fibre optic interconnecting devices and passive components – Basic test and measurement procedures – Part 3-3: Examinations and measurements – Active monitoring of changes in attenuation and return loss*

IEC 61300-3-4, *Fibre optic interconnecting devices and passive components – Basic test and measurement procedures – Part 3-4: Examinations and measurements – Attenuation*

IEC 61753-071-2:2014, *Fibre optic interconnecting devices and passive components – Performance standard – Part 071-2: Non-connectorized single-mode fibre optic 1 × 2 and 2 × 2 spatial switches for category C – Controlled environments*

IEC 61753-1:2018, *Fibre optic interconnecting devices and passive components – Performance standard – Part 1: General and guidance*

IEC 62343-1, *Dynamic modules – Part 1: Performance standards – General conditions*

ITU-T G-series Recommendations, Supplement 39, *Transmission systems and media, digital systems and networks – Optical system design and engineering considerations*

Documents
Document Sharing Hub

Full document details: IEC 61753-071-02-2024

Documents
Document Sharing Hub

Full document details: IEC 61753-071-02-2024

SOMMAIRE

AVANT-PROPOS 17
1 Domaine d'application 19
2 Références normatives 19
3 Termes et définitions 20
4 Conditions d'essai 22
5 Rapport d'essai 23
6 Exigences de performances 23
6.1 Dimensions 23
6.2 Nombre d'échantillons 23
6.3 Exigences et détails d'essai 23
Annexe A (normative) Nombre d'échantillons 28
Bibliographie 29

Figure 1 – Configuration d'un commutateur spatial 1 × 2 21
Figure 2 – Configuration d'un commutateur spatial 2 × 2, sans croisement 22
Figure 3 – Configuration d'un commutateur spatial 2 × 2, avec croisement 22

Tableau 1 – Bandes spectrales en unimodal 23
Tableau 2 – Détails des essais et exigences pour la catégorie C 23
Tableau A.1 – Nombre d'échantillons pour chaque essai 28

Documents
Document Sharing Hub
Full document details: IEC 61753-071-02-2024