IEC 61753-381-2

Edition 1.0 2016-01

INTERNATIONAL STANDARD

NORME INTERNATIONALE

Fibre optic interconnecting devices and passive components – Performance standard –
Part 381-2: Cyclic arrayed waveguide grating – Category C (controlled environment)

Dispositifs d'interconnexion et composants passifs à fibres optiques – Norme de performance –
Partie 381-2: Réseau sélectif planaire cyclique – Catégorie C (environnement contrôlé)

IEC 61753-381-2:2016-01(en-fr)

Documents
Document Sharing Hub

Full document details: IEC 61753-381-2 2016

THIS PUBLICATION IS COPYRIGHT PROTECTED

Copyright © 2016 IEC, Geneva, Switzerland

All rights reserved. Unless otherwise specified, no part of this publication may be reproduced or utilized in any form or by any means, electronic or mechanical, including photocopying and microfilm, without permission in writing from either IEC or IEC's member National Committee in the country of the requester. If you have any questions about IEC copyright or have an enquiry about obtaining additional rights to this publication, please contact the address below or your local IEC member National Committee for further information.

Droits de reproduction réservés. Sauf indication contraire, aucune partie de cette publication ne peut être reproduite ni utilisée sous quelque forme que ce soit et par aucun procédé, électronique ou mécanique, y compris la photocopie et les microfilms, sans l'accord écrit de l'IEC ou du Comité national de l'IEC du pays du demandeur. Si vous avez des questions sur le copyright de l'IEC ou si vous désirez obtenir des droits supplémentaires sur cette publication, utilisez les coordonnées ci-après ou contactez le Comité national de l'IEC de votre pays de résidence.

IEC Central Office
3, rue de Varembé
CH-1211 Geneva 20
Switzerland

Tel.: +41 22 919 02 11
Fax: +41 22 919 03 00
info@iec.ch
www.iec.ch

About the IEC
The International Electrotechnical Commission (IEC) is the leading global organization that prepares and publishes International Standards for all electrical, electronic and related technologies.

About IEC publications
The technical content of IEC publications is kept under constant review by the IEC. Please make sure that you have the latest edition, a corrigenda or an amendment might have been published.

IEC Catalogue - webstore.iec.ch/catalogue
The stand-alone application for consulting the entire bibliographical information on IEC International Standards, Technical Specifications, Technical Reports and other documents. Available for PC, Mac OS, Android Tablets and iPad.

IEC publications search - www.iec.ch/searchpub
The advanced search enables to find IEC publications by a variety of criteria (reference number, text, technical committee,…). It also gives information on projects, replaced and withdrawn publications.

IEC Just Published - webstore.iec.ch/justpublished
Stay up to date on all new IEC publications. Just Published details all new publications released. Available online and also once a month by email.

Electropedia - www.electropedia.org
The world's leading online dictionary of electronic and electrical terms containing 20 000 terms and definitions in English and French, with equivalent terms in 15 additional languages. Also known as the International Electrotechnical Vocabulary (IEV) online.

IEC Glossary - std.iec.ch/glossary
65 000 electrotechnical terminology entries in English and French extracted from the Terms and Definitions clause of IEC publications issued since 2002. Some entries have been collected from earlier publications of IEC TC 37, 77, 86 and CISPR.

IEC Customer Service Centre - webstore.iec.ch/csc
If you wish to give us your feedback on this publication or need further assistance, please contact the Customer Service Centre: csc@iec.ch.

A propos de l'IEC
La Commission Electrotechnique Internationale (IEC) est la première organisation mondiale qui élabore et publie des Normes internationales pour tout ce qui a trait à l'électricité, à l'électronique et aux technologies apparentées.

A propos des publications IEC
Le contenu technique des publications IEC est constamment revu. Veuillez vous assurer que vous possédez l'édition la plus récente, un corrigendum ou amendement peut avoir été publié.

Catalogue IEC - webstore.iec.ch/catalogue
Application autonome pour consulter tous les renseignements bibliographiques sur les Normes internationales, Spécifications techniques, Rapports techniques et autres documents de l'IEC. Disponible pour PC, Mac OS, tablettes Android et iPad.

Recherche de publications IEC - www.iec.ch/searchpub

La recherche avancée permet de trouver des publications IEC en utilisant différents critères (numéro de référence, texte, comité d'études,…). Elle donne aussi des informations sur les projets et les publications remplacées ou retirées.

IEC Just Published - webstore.iec.ch/justpublished

Restez informé sur les nouvelles publications IEC. Just Published détaille les nouvelles publications parues. Disponible en ligne et aussi une fois par mois par email.

Electropedia - www.electropedia.org

Le premier dictionnaire en ligne de termes électroniques et électriques. Il contient 20 000 termes et définitions en anglais et en français, ainsi que les termes équivalents dans 15 langues additionnelles. Egalement appelé Vocabulaire Electrotechnique International (IEV) en ligne.

Glossaire IEC - std.iec.ch/glossary
65 000 entrées terminologiques électrotechniques, en anglais et en français, extraites des articles Termes et Définitions des publications IEC parues depuis 2002. Plus certaines entrées antérieures extraites des publications des CE 37, 77, 86 et CISPR de l'IEC.

Service Clients - webstore.iec.ch/csc

Si vous désirez nous donner des commentaires sur cette publication ou si vous avez des questions contactez-nous: csc@iec.ch.

Documents
Document Sharing Hub

Full document details: IEC 61753-381-2 2016

IEC 61753-381-2

Edition 1.0 2016-01

INTERNATIONAL STANDARD

NORME INTERNATIONALE

Fibre optic interconnecting devices and passive components – Performance standard –
Part 381-2: Cyclic arrayed waveguide grating – Category C (controlled environment)

Dispositifs d'interconnexion et composants passifs à fibres optiques – Norme de performance –
Partie 381-2: Réseau sélectif planaire cyclique – Catégorie C (environnement contrôlé)

INTERNATIONAL
ELECTROTECHNICAL
COMMISSION

COMMISSION
ELECTROTECHNIQUE
INTERNATIONALE

ICS 33.180.20

ISBN 978-2-8322-3096-1

Warning! Make sure that you obtained this publication from an authorized distributor.
Attention! Veuillez vous assurer que vous avez obtenu cette publication via un distributeur agréé.

® Registered trademark of the International Electrotechnical Commission
Marque déposée de la Commission Electrotechnique Internationale

Documents
Document Sharing Hub

Full document details: IEC 61753-381-2 2016

CONTENTS

FOREWORD 3
1 Scope 5
2 Normative references 5
3 Terms and definitions 6
4 Test conditions 7
5 Test report 7
6 Reference components 8
7 Performance requirements 8
7.1 Dimensions 8
7.2 Test details and requirements 8
Annex A (normative) Sample size 14
Annex B (informative) General information on cyclic AWGs 15
Annex C (informative) Channel frequency range and free spectral range 17
Annex D (informative) Summary of differences between IEC 61753-081-2 and IEC 61753-381-2 18
Bibliography 19

Figure 1 – Illustration of cyclic AWGs 7
Figure B.1 – Single bidirectional transmission with cyclic AWGs 15
Figure B.2 – Reference diagram of ITU-T G.698.3 16
Figure C.1 – Description of channel frequency range and free spectral range 17

Table 1 – Tests and requirements of optical performance parameters 9
Table 2 – Environmental tests & mechanical tests 12
Table A.1 – Sample size 14
Table D.1 – Summary of differences between IEC 61753-081-2 and IEC 61753-381-2 18

Documents
Document Sharing Hub

Full document details: IEC 61753-381-2 2016

INTERNATIONAL ELECTROTECHNICAL COMMISSION

FIBRE OPTIC INTERCONNECTING DEVICES AND PASSIVE COMPONENTS – PERFORMANCE STANDARD –

Part 381-2: Cyclic arrayed waveguide grating – Category C (controlled environment)

FOREWORD

1) The International Electrotechnical Commission (IEC) is a worldwide organization for standardization comprising all national electrotechnical committees (IEC National Committees). The object of IEC is to promote international co-operation on all questions concerning standardization in the electrical and electronic fields. To this end and in addition to other activities, IEC publishes International Standards, Technical Specifications, Technical Reports, Publicly Available Specifications (PAS) and Guides (hereafter referred to as "IEC Publication(s)"). Their preparation is entrusted to technical committees; any IEC National Committee interested in the subject dealt with may participate in this preparatory work. International, governmental and non-governmental organizations liaising with the IEC also participate in this preparation. IEC collaborates closely with the International Organization for Standardization (ISO) in accordance with conditions determined by agreement between the two organizations.
2) The formal decisions or agreements of IEC on technical matters express, as nearly as possible, an international consensus of opinion on the relevant subjects since each technical committee has representation from all interested IEC National Committees.
3) IEC Publications have the form of recommendations for international use and are accepted by IEC National Committees in that sense. While all reasonable efforts are made to ensure that the technical content of IEC Publications is accurate, IEC cannot be held responsible for the way in which they are used or for any misinterpretation by any end user.
4) In order to promote international uniformity, IEC National Committees undertake to apply IEC Publications transparently to the maximum extent possible in their national and regional publications. Any divergence between any IEC Publication and the corresponding national or regional publication shall be clearly indicated in the latter.
5) IEC itself does not provide any attestation of conformity. Independent certification bodies provide conformity assessment services and, in some areas, access to IEC marks of conformity. IEC is not responsible for any services carried out by independent certification bodies.
6) All users should ensure that they have the latest edition of this publication.
7) No liability shall attach to IEC or its directors, employees, servants or agents including individual experts and members of its technical committees and IEC National Committees for any personal injury, property damage or other damage of any nature whatsoever, whether direct or indirect, or for costs (including legal fees) and expenses arising out of the publication, use of, or reliance upon, this IEC Publication or any other IEC Publications.
8) Attention is drawn to the Normative references cited in this publication. Use of the referenced publications is indispensable for the correct application of this publication.
9) Attention is drawn to the possibility that some of the elements of this IEC Publication may be the subject of patent rights. IEC shall not be held responsible for identifying any or all such patent rights.

International Standard IEC 61753-381-2 has been prepared by subcommittee 86B: Fibre optic interconnecting devices and passive components, of IEC technical committee 86: Fibre optics.

The text of this standard is based on the following documents:

FDIS	Report on voting
86B/3954/FDIS	86B/3969/RVD

Full information on the voting for the approval of this standard can be found in the report on voting indicated in the above table.

This publication has been drafted in accordance with the ISO/IEC Directives, Part 2.

AVA Documents
Document Sharing Hub

Full document details: IEC 61753-381-2 2016

A list of all parts in the IEC 61753 series, published under the general title *Fibre optic interconnecting devices and passive components – Performance standard*, can be found on the IEC website.

Future standards in this series will carry the new general title as cited above. Titles of existing standards in this series will be updated at the time of the next edition.

The committee has decided that the contents of this publication will remain unchanged until the stability date indicated on the IEC website under "http://webstore.iec.ch" in the data related to the specific publication. At this date, the publication will be

- reconfirmed,
- withdrawn,
- replaced by a revised edition, or
- amended.

Documents
Document Sharing Hub

Full document details: IEC 61753-381-2 2016

FIBRE OPTIC INTERCONNECTING DEVICES AND PASSIVE COMPONENTS – PERFORMANCE STANDARD –

Part 381-2: Cyclic arrayed waveguide grating – Category C (controlled environment)

1 Scope

This part of IEC 61753 contains the minimum initial test and measurement requirements and severities which a Gaussian-passband-profile cyclic arrayed waveguide grating (AWG) for single-mode and bidirectional transmission systems satisfies in order to be categorised as meeting the requirements of IEC 61753-1 for category C (controlled environment). This standard pertains to wavelength division multiplexing (WDM) network with multiple spectral-band usage. This standard covers the requirements of cyclic AWG devices with free spectral range (FSR) characteristics to ensure multiple spectral bands transmission performance, with single-mode non-connectorised pigtails and no electric circuit board.

2 Normative references

The following documents, in whole or in part, are normatively referenced in this document and are indispensable for its application. For dated references, only the edition cited applies. For undated references, the latest edition of the referenced document (including any amendments) applies.

IEC 61300-2-1, *Fibre optic interconnecting devices and passive components – Basic test and measurement procedures – Part 2-1: Tests – Vibration (sinusoidal)*

IEC 61300-2-4, *Fibre optic interconnecting devices and passive components – Basic test and measurement procedures – Part 2-4: Tests – Fibre/cable retention*

IEC 61300-2-9, *Fibre optic interconnecting devices and passive components – Basic test and measurement procedures – Part 2-9: Tests – Shock*

IEC 61300-2-14, *Fibre optic interconnecting devices and passive components – Basic test and measurement procedures – Part 2-14: Tests – High optical power*

IEC 61300-2-17, *Fibre optic interconnecting devices and passive components – Basic test and measurement procedures – Part 2-17: Tests – Cold*

IEC 61300-2-18, *Fibre optic interconnecting devices and passive components – Basic test and measurement procedures – Part 2-18: Tests – Dry heat – High temperature endurance*

IEC 61300-2-19, *Fibre optic interconnecting devices and passive components – Basic test and measurement procedures – Part 2-19: Tests – Damp heat (steady state)*

IEC 61300-2-22, *Fibre optic interconnecting devices and passive components – Basic test and measurement procedures – Part 2-22: Tests – Change of temperature*

IEC 61300-2-42, *Fibre optic interconnecting devices and passive components – Basic test and measurement procedures – Part 2-42: Tests – Static side load for strain relief*

Documents
Document Sharing Hub

Full document details: IEC 61753-381-2 2016

IEC 61300-2-44, *Fibre optic interconnecting devices and passive components – Basic test and measurement procedures – Part 2-44: Tests – Flexing of the strain relief of fibre optic devices*

IEC 61300-3-2, *Fibre optic interconnecting devices and passive components – Basic test and measurement procedures – Part 3-2: Examination and measurements – Polarization dependent loss in a single-mode fibre optic device*

IEC 61300-3-6, *Fibre optic interconnecting devices and passive components – Basic test and measurement procedures – Part 3-6: Examinations and measurements – Return loss*

IEC 61300-3-20, *Fibre optic interconnecting devices and passive components – Basic test and measurement procedures – Part 3-20: Examinations and measurements – Directivity of fibre optic branching devices*

IEC 61300-3-29, *Fibre optic interconnecting devices and passive components – Basic test and measurement procedures – Part 3-29: Examinations and measurements – Spectral transfer characteristics of DWDM devices*

IEC 61300-3-32, *Fibre optic interconnecting devices and passive components – Basic test and measurement procedures – Part 3-32: Examinations and measurements – Polarization mode dispersion measurement for passive optical components*

IEC 61300-3-38, *Fibre optic interconnecting devices and passive components – Basic test and measurement procedures – Part 3-38: Examinations and measurements – Group delay, chromatic dispersion and phase ripple*

IEC 61753-021-2, *Fibre optic interconnecting devices and passive components performance standard – Part 021-2: Grade C/3 single-mode fibre optic connectors for category C – Controlled environment*

IEC 62074-1, *Fibre optic interconnecting devices and passive components – Fibre optic WDM devices – Part 1: Generic specification*

ITU-T Recommendation G.692, *Optical interfaces for multichannel systems with optical amplifiers.*

ITU-T Recommendation G.694.1, *Spectral grids for WDM applications: DWDM frequency grid*

ITU-T Recommendation G.698.3, *Multichannel seeded DWDM applications with single-channel optical interfaces*

3 Terms and definitions

For the purposes of this document, the terms and definitions given in IEC 62074-1, as well as the following apply.

3.1
cyclic arrayed waveguide grating
cyclic AWG
multi wavelength-selective branching device which can perform the function of a wavelength multiplexer and/or demultiplexer with DWDM channel spacing

Note 1 to entry: The device has free spectral range (FSR) characteristics for operating in multiple spectral bands. In the cyclic AWG, the wavelength emerging at the particular output port is spaced by an integer of the FSR as illustrated in Figure 1. General information on cyclic AWGs is described in Annex B.

Documents
Document Sharing Hub

Full document details: IEC 61753-381-2 2016

Note 2 to entry: This note applies to the French language only.

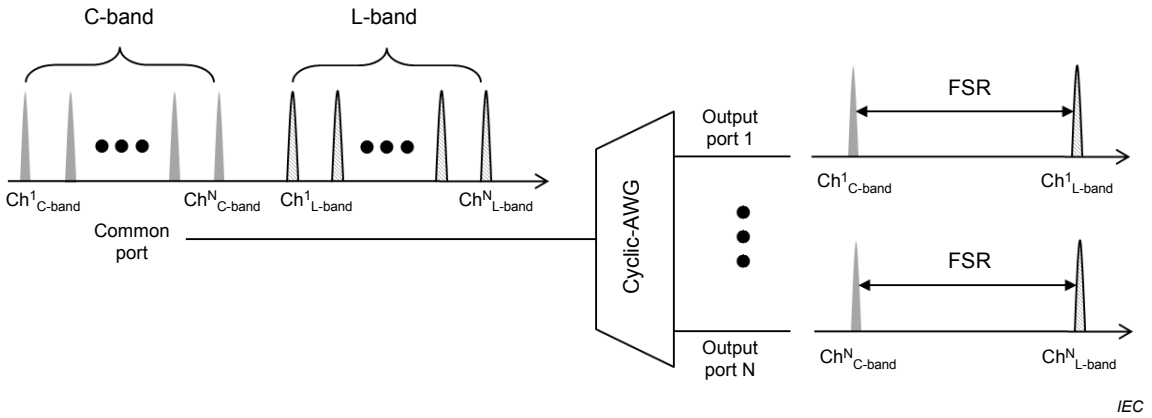

Figure 1 – Illustration of cyclic AWGs

3.2
free spectral range
FSR
difference between two adjacent operating wavelengths for a given input output path

Note 1 to entry: This note applies to the French language only.

3.3
wavelength division multiplexing
WDM
multiplexing in which several independent signals are allotted separate wavelengths for transmission over a common optical transmission medium

Note 1 to entry: This note applies to the French language only.

3.4
dense WDM
DWDM
WDM device intended to operate for channel spacing equal to or less than 1 000 GHz

Note 1 to entry: This note applies to the French language only.

4 Test conditions

All test methods are in accordance with the IEC 61300 series. Each test defines the number of samples to be evaluated. DWDM devices used for each test are intended to be previously unstressed new samples but may also be selected from previously used samples if desired.

All measurements shall be carried out at normal room conditions, unless otherwise stated. If the device is provided with an active temperature control, this shall be set at the set-point specified by the manufacturer.

All tests are to be carried out to validate performance over the required operating wavelength range. As a result, single or multiple spectral bands may be chosen for the qualification and differing target specifications may be assigned to each spectral band.

5 Test report

Fully documented test reports and supporting evidence shall be prepared and shall be available for inspection as evidence that the tests have been carried out and complied with.

AVA Documents
Document Sharing Hub
Full document details: IEC 61753-381-2 2016

6 Reference components

The testing for DWDM devices does not require the use of reference components.

7 Performance requirements

7.1 Dimensions

Dimensions shall be in accordance with those given in appropriate manufacturers' drawings.

7.2 Test details and requirements

Table 1 specifies the optical perfomance and related test methods for Gaussian passband profile.

Table 2 defines the environmental and mechanical performance requirements and test methods.

The operating wavelengths, unless otherwise specified, shall be in accordance with ITU Recommendation G.692, G.694.1 and G.698.3 (Frequency Spacing). Where devices with wavelength spaced channels have to be considered the conversion should refer to vacuum wavelength.

The value of "c" (speed of light in vacuum) that should be used for converting between frequency and wavelength is 2,997 924 58 $\times$ 10^8 m/s.

Conformance to this standard requires demonstration of the ability to meet both the relevant optical and the environmental parameters.

For connectorized components, the connector performances shall be in accordance with IEC 61753-021-2.

Documents
Document Sharing Hub

Full document details: IEC 61753-381-2 2016

Table 1 – Tests and requirements of optical performance parameters

No	Tests	Requirements	Details	
1	Number of channels: n	$16 \leq n \leq 48$	Operating wavelength:	ITU-T grid or custom design NOTE Design information (not test item)
2	Channel frequency range	Channel central frequency $\pm$ 0,125 $\times$ Δf where Δf is the channel spacing	Channel central frequency:	ITU-T grid or custom design 1) L-band Minimum channel spacing: 97,15 GHz Minimum channel frequency: 186,143 THz Maximum channel frequency: 190,709 05 THz 2) C-band Minimum channel spacing: 100 GHz Minimum channel frequency: 191,5 THz Maximum channel frequency: 196,2 THz NOTE Design information (not test item)
3	Free spectral range	5 425,4 GHz	Free spectral range	NOTE Design information (not test item)
4	Insertion loss IEC 61300-3-29	$\leq$ 4,8 dB Maximum allowable insertion loss over the channel frequency range	Launch fibre length: Measurement uncertainty	$\geq$ 2,0 m $\pm$0,05 dB The insertion loss should be determined as the worst case over all states of polarisation.
5	Channel non-uniformity IEC 61300-3-29	$\leq$ 1,0 dB ($n \leq 24$) $\leq$ 1,5 dB ($n > 24$) Maximum allowable channel non-uniformity of insertion losses	Launch fibre length: Measurement uncertainty	$\geq$ 2,0 m $\pm$0,05 dB The channel non-uniformity should be determined as the worst case over all states of polarisation.
6	1 dB band width IEC 61300-3-29	$\geq$ 0,25 $\times$ Δf where Δf is the channel spacing Minimum allowable 1 dB band width (centred at the channel frequency)	Launch fibre length: Measurement uncertainty:	$\geq$ 2,0 m $\pm$ 0,01 $\times$ Δf The 1 dB band width should be determined as the worst case over all states of polarisation.
7	3 dB band width IEC 61300-3-29	$\geq$ 0,5 $\times$ Δf where Δf is the channel spacing Minimum allowable 3 dB bandwidth (centred at the channel frequency)	Launch fibre length: Measurement uncertainty:	$\geq$ 2,0 m $\pm$ 0,01 $\times$ Δf The 3 dB bandwidth should be determined as the worst case over all states of polarisation.

Documents
Document Sharing Hub
Full document details: IEC 61753-381-2 2016

No	Tests	Requirements	Details	
8	Passband ripple IEC 61300-3-29	≤ 1,5 dB Maximum insertion loss variation within the channel frequency range	Launch fibre length: Measurement uncertainty:	≥ 2,0 m ±0,05 dB The passband ripple should be determined as the worst case over all states of polarisation.
9	Adjacent channel crosstalk IEC 61300-3-29	≤ -25 dB Minimum allowable adjacent channel crosstalk over the channel frequency range	Launch fibre length: Measurement uncertainty:	≥ 2,0 m ±0,1 dB The adjacent channel crosstalk is specified only for demultiplexer. The adjacent channel crosstalk should be determined as the worst case over all states of polarisation.
10	Non-adjacent channel crosstalk IEC 61300-3-29	≤ -30 dB Minimum allowable non-adjacent channel crosstalk over the channel frequency range	Launch fibre length: Measurement uncertainty:	≥ 2,0 m ±0,1 dB The non-adjacent channel crosstalk is specified only for demultiplexer. The non-adjacent channel crosstalk should be determined as the worst case over all states of polarisation.
11	Total channel crosstalk IEC 61300-3-29	≤ -22 dB ($n \leq 48$) ≤ -20 dB ($n > 48$) Minimum allowable total channel crosstalk value	Launch fibre length: Measurement uncertainty:	≥ 2,0 m ±0,1 dB The total adjacent channel crosstalk is specified only for demultiplexer. The total adjacent channel crosstalk should be determined as the worst case over all states of polarisation.
12	Polarisation dependent loss (PDL) IEC 61300-3-2	≤ 0,4 dB Maximum allowable PDL over the channel frequency range	Launch fibre length: Measurement uncertainty:	≥ 2,0 m ±0,05 dB The allowable PDL combination applies to all combination of input and output ports
13	Polarisation mode dispersion (PMD) IEC 61300-3-32	≤ 0,5 ps Maximum allowable PMD over the channel frequency range	Launch fibre length: Measurement uncertainty:	≥ 2,0 m ±0,1 ps The allowable PMD combination applies to all combination of input and output ports

AVA Documents
Document Sharing Hub

Full document details: IEC 61753-381-2 2016

No	Tests	Requirements	Details	
14	Chromatic dispersion (CD) IEC 61300-3-38	≤ 20 ps/nm for 97,15 GHz minimum channel spacing ≤ 20 ps/nm for 100 GHz minimum channel spacing Maximum allowable CD over the channel frequency range (absolute value)	Launch fibre length: Measurement uncertainty:	≥ 2,0 m ±1 ps/nm NOTE The allowable CD combination applies to all combination of input and output ports
15	Return loss IEC 61300-3-6	≥ 40 dB Minimum allowable return loss	Launch fibre length: Measurement uncertainty:	≥ 2,0 m ±1 dB All ports not under test should be terminated to avoid unwanted reflections contributing to the measurement
16	Directivity IEC 61300-3-20	≥ 40 dB Maximum allowable directivity	Launch fibre length: Measurement uncertainty:	≥ 2,0 m ±1 dB All ports not under test should be terminated to avoid unwanted reflections contributing to the measurement The directivity shall be measured between any pair of input or output ports
17	High optical power IEC 61300-2-14	Before and after the test, the limits of insertion loss and return loss of tests no. 4 and 15 shall be met. During the test, the insertion loss change is monitored. During and after the test, the insertion loss change shall be within ±0,3 dB of the initial value. During the test, the return loss change is monitored. The sum of the initial value and the change of the return loss shall be within the value defined at test no. 5.	Optical power Wavelength Duration of the optical power exposure Temperature: Relative humidity: Input port	300 mW 1 550 nm 30 min +60 °C ± 2 °C 93^{+2}_{-3} % RH Common port

Documents
Document Sharing Hub

Full document details: IEC 61753-381-2 2016