IEC 61754-13

Edition 3.0 2024-05

INTERNATIONAL STANDARD

NORME INTERNATIONALE

Fibre optic interconnecting devices and passive components – Fibre optic connector interfaces –
Part 13: Type FC-PC connector family

Dispositifs d'interconnexion et composants passifs fibroniques – Interfaces de connecteurs fibroniques –
Partie 13: Famille de connecteurs de type FC-PC

IEC 61754-13:2024-05(en-fr)

Documents
Document Sharing Hub
Full document details: IEC 61754-13-2024

THIS PUBLICATION IS COPYRIGHT PROTECTED
Copyright © 2024 IEC, Geneva, Switzerland

All rights reserved. Unless otherwise specified, no part of this publication may be reproduced or utilized in any form or by any means, electronic or mechanical, including photocopying and microfilm, without permission in writing from either IEC or IEC's member National Committee in the country of the requester. If you have any questions about IEC copyright or have an enquiry about obtaining additional rights to this publication, please contact the address below or your local IEC member National Committee for further information.

Droits de reproduction réservés. Sauf indication contraire, aucune partie de cette publication ne peut être reproduite ni utilisée sous quelque forme que ce soit et par aucun procédé, électronique ou mécanique, y compris la photocopie et les microfilms, sans l'accord écrit de l'IEC ou du Comité national de l'IEC du pays du demandeur. Si vous avez des questions sur le copyright de l'IEC ou si vous désirez obtenir des droits supplémentaires sur cette publication, utilisez les coordonnées ci-après ou contactez le Comité national de l'IEC de votre pays de résidence.

IEC Secretariat
3, rue de Varembé
CH-1211 Geneva 20
Switzerland

Tel.: +41 22 919 02 11
info@iec.ch
www.iec.ch

About the IEC
The International Electrotechnical Commission (IEC) is the leading global organization that prepares and publishes International Standards for all electrical, electronic and related technologies.

About IEC publications
The technical content of IEC publications is kept under constant review by the IEC. Please make sure that you have the latest edition, a corrigendum or an amendment might have been published.

IEC publications search - webstore.iec.ch/advsearchform
The advanced search enables to find IEC publications by a variety of criteria (reference number, text, technical committee, …). It also gives information on projects, replaced and withdrawn publications.

IEC Just Published - webstore.iec.ch/justpublished
Stay up to date on all new IEC publications. Just Published details all new publications released. Available online and once a month by email.

IEC Customer Service Centre - webstore.iec.ch/csc
If you wish to give us your feedback on this publication or need further assistance, please contact the Customer Service Centre: sales@iec.ch.

IEC Products & Services Portal - products.iec.ch
Discover our powerful search engine and read freely all the publications previews, graphical symbols and the glossary. With a subscription you will always have access to up to date content tailored to your needs.

Electropedia - www.electropedia.org
The world's leading online dictionary on electrotechnology, containing more than 22 500 terminological entries in English and French, with equivalent terms in 25 additional languages. Also known as the International Electrotechnical Vocabulary (IEV) online.

A propos de l'IEC
La Commission Electrotechnique Internationale (IEC) est la première organisation mondiale qui élabore et publie des Normes internationales pour tout ce qui a trait à l'électricité, à l'électronique et aux technologies apparentées.

A propos des publications IEC
Le contenu technique des publications IEC est constamment revu. Veuillez vous assurer que vous possédez l'édition la plus récente, un corrigendum ou amendement peut avoir été publié.

Recherche de publications IEC - webstore.iec.ch/advsearchform
La recherche avancée permet de trouver des publications IEC en utilisant différents critères (numéro de référence, texte, comité d'études, …). Elle donne aussi des informations sur les projets et les publications remplacées ou retirées.

IEC Just Published - webstore.iec.ch/justpublished
Restez informé sur les nouvelles publications IEC. Just Published détaille les nouvelles publications parues. Disponible en ligne et une fois par mois par email.

Service Clients - webstore.iec.ch/csc
Si vous désirez nous donner des commentaires sur cette publication ou si vous avez des questions contactez-nous: sales@iec.ch.

IEC Products & Services Portal - products.iec.ch
Découvrez notre puissant moteur de recherche et consultez gratuitement tous les aperçus des publications, symboles graphiques et le glossaire. Avec un abonnement, vous aurez toujours accès à un contenu à jour adapté à vos besoins.

Electropedia - www.electropedia.org
Le premier dictionnaire d'électrotechnologie en ligne au monde, avec plus de 22 500 articles terminologiques en anglais et en français, ainsi que les termes équivalents dans 25 langues additionnelles. Egalement appelé Vocabulaire Electrotechnique International (IEV) en ligne.

Documents
Document Sharing Hub

Full document details: IEC 61754-13-2024

IEC 61754-13

Edition 3.0 2024-05

INTERNATIONAL STANDARD

NORME INTERNATIONALE

Fibre optic interconnecting devices and passive components – Fibre optic connector interfaces – Part 13: Type FC-PC connector family

Dispositifs d'interconnexion et composants passifs fibroniques – Interfaces de connecteurs fibroniques – Partie 13: Famille de connecteurs de type FC-PC

INTERNATIONAL
ELECTROTECHNICAL
COMMISSION

COMMISSION
ELECTROTECHNIQUE
INTERNATIONALE

ICS 33.180.20

ISBN 978-2-8322-8830-6

Warning! Make sure that you obtained this publication from an authorized distributor.
Attention! Veuillez vous assurer que vous avez obtenu cette publication via un distributeur agréé.

® Registered trademark of the International Electrotechnical Commission
Marque déposée de la Commission Electrotechnique Internationale

Documents
Document Sharing Hub

Full document details: IEC 61754-13-2024

CONTENTS

FOREWORD 3
1 Scope 5
2 Normative references 5
3 Terms and definitions 5
4 Description 5
5 Interfaces 6
5.1 General 6
5.2 Intermateability 6
5.3 Interfaces and dimensions 6
Bibliography 15

Figure 1 – Plug connector interface 7
Figure 2 – Adaptor connector interface 10
Figure 3 – Pin gauge for adaptor 11
Figure 4 – Active device receptacle interface 12
Figure 5 – Pin gauge for active device receptacle 14

Table 1 – Intermateability of interfaces 6
Table 2 – Dimensions of the plug connector interface 8
Table 3 – Grade characteristics for plug connector 9
Table 4 – Dimensions of the adaptor connector interface 11
Table 5 – Pin gauge dimensions 11
Table 6 – Dimensions of the active device receptacle interface 13
Table 7 – Alignment feature grade of the active device receptacle interface 13
Table 8 – Pin gauge dimensions 14

Documents
Document Sharing Hub
Full document details: IEC 61754-13-2024

INTERNATIONAL ELECTROTECHNICAL COMMISSION

FIBRE OPTIC INTERCONNECTING DEVICES AND PASSIVE COMPONENTS – FIBRE OPTIC CONNECTOR INTERFACES –

Part 13: Type FC-PC connector family

FOREWORD

1) The International Electrotechnical Commission (IEC) is a worldwide organization for standardization comprising all national electrotechnical committees (IEC National Committees). The object of IEC is to promote international co-operation on all questions concerning standardization in the electrical and electronic fields. To this end and in addition to other activities, IEC publishes International Standards, Technical Specifications, Technical Reports, Publicly Available Specifications (PAS) and Guides (hereafter referred to as "IEC Publication(s)"). Their preparation is entrusted to technical committees; any IEC National Committee interested in the subject dealt with may participate in this preparatory work. International, governmental and non-governmental organizations liaising with the IEC also participate in this preparation. IEC collaborates closely with the International Organization for Standardization (ISO) in accordance with conditions determined by agreement between the two organizations.
2) The formal decisions or agreements of IEC on technical matters express, as nearly as possible, an international consensus of opinion on the relevant subjects since each technical committee has representation from all interested IEC National Committees.
3) IEC Publications have the form of recommendations for international use and are accepted by IEC National Committees in that sense. While all reasonable efforts are made to ensure that the technical content of IEC Publications is accurate, IEC cannot be held responsible for the way in which they are used or for any misinterpretation by any end user.
4) In order to promote international uniformity, IEC National Committees undertake to apply IEC Publications transparently to the maximum extent possible in their national and regional publications. Any divergence between any IEC Publication and the corresponding national or regional publication shall be clearly indicated in the latter.
5) IEC itself does not provide any attestation of conformity. Independent certification bodies provide conformity assessment services and, in some areas, access to IEC marks of conformity. IEC is not responsible for any services carried out by independent certification bodies.
6) All users should ensure that they have the latest edition of this publication.
7) No liability shall attach to IEC or its directors, employees, servants or agents including individual experts and members of its technical committees and IEC National Committees for any personal injury, property damage or other damage of any nature whatsoever, whether direct or indirect, or for costs (including legal fees) and expenses arising out of the publication, use of, or reliance upon, this IEC Publication or any other IEC Publications.
8) Attention is drawn to the Normative references cited in this publication. Use of the referenced publications is indispensable for the correct application of this publication.
9) IEC draws attention to the possibility that the implementation of this document may involve the use of (a) patent(s). IEC takes no position concerning the evidence, validity or applicability of any claimed patent rights in respect thereof. As of the date of publication of this document, IEC had not received notice of (a) patent(s), which may be required to implement this document. However, implementers are cautioned that this may not represent the latest information, which may be obtained from the patent database available at https://patents.iec.ch. IEC shall not be held responsible for identifying any or all such patent rights.

IEC 61754-13 has been prepared by subcommittee 86B: Fibre optic interconnecting devices and passive components, of IEC technical committee 86: Fibre optics. It is an International Standard.

This third edition cancels and replaces the second edition published in 2006. This edition constitutes a technical revision.

This edition includes the following significant technical changes with respect to the previous edition:

a) Revising normative reference reflecting the latest documents;

b) Addition of intermateability in 5.2;

Documents
Document Sharing Hub

Full document details: IEC 61754-13-2024

c) Changes of dimensions of the plug connector interface in Table 2 and Table 3;

d) Addition of Grade A_m, B_m and C_m in Table 3.

The text of this International Standard is based on the following documents:

Draft	Report on voting
86B/4874/FDIS	86B/4911/RVD

Full information on the voting for its approval can be found in the report on voting indicated in the above table.

The language used for the development of this International Standard is English.

A list of all parts in the IEC 61754 series, published under the general title *Fibre optic interconnecting devices and passive components – Fibre optic connector interfaces*, can be found on the IEC website.

This document was drafted in accordance with ISO/IEC Directives, Part 2, and developed in accordance with ISO/IEC Directives, Part 1 and ISO/IEC Directives, IEC Supplement, available at www.iec.ch/members_experts/refdocs. The main document types developed by IEC are described in greater detail at www.iec.ch/publications.

The committee has decided that the contents of this document will remain unchanged until the stability date indicated on the IEC website under webstore.iec.ch in the data related to the specific document. At this date, the document will be

- reconfirmed,
- withdrawn, or
- revised.

Documents
Document Sharing Hub

Full document details: IEC 61754-13-2024

FIBRE OPTIC INTERCONNECTING DEVICES AND PASSIVE COMPONENTS – FIBRE OPTIC CONNECTOR INTERFACES –

Part 13: Type FC-PC connector family

1 Scope

This part of IEC 61754 defines the standard interface dimensions for the type FC-PC family of connectors.

2 Normative references

The following documents are referred to in the text in such a way that some or all of their content constitutes requirements of this document. For dated references, only the edition cited applies. For undated references, the latest edition of the referenced document (including any amendments) applies.

IEC 61754-1, *Fibre optic interconnecting devices and passive components – Fibre optic connector interfaces – Part 1: General and guidance*

IEC 61755-3-1, *Fibre optic connector optical interfaces – Part 3-1: Optical interface, 2,5 mm and 1,25 mm diameter cylindrical full zirconia PC ferrule, single mode fibre*

3 Terms and definitions

For the purposes of this document, the terms and definitions given in 61754-1 and the following apply.

ISO and IEC maintain terminology databases for use in standardization at the following addresses:

- IEC Electropedia: available at https://www.electropedia.org/
- ISO Online browsing platform: available at https://www.iso.org/obp

3.1
screw coupling mechanism
coupling mechanism in which a plug connector is inserted into an adaptor connector or an active device receptacle, and a female screw formed on a coupling nut of the plug connector is tightened with a male screw formed on the adaptor connector or the active device receptacle

4 Description

The parent connector for type FC connector family is a single position plug connector set of plug and adaptor configuration which is characterized by a 2,5 mm nominal ferrule diameter. It includes a screw coupling mechanism, which is spring loaded relative to the ferrule in the direction of the optical axis. The coupling can be released by loosening the screw, and the plug connector can be detached from the optical adapter, the adaptor connector, or the active device receptacle. The plug has a single male key which may be used to orient and limit the relative position between the connector and the component to which it is mated. The optical alignment mechanism of the connectors is of a rigid bore sleeve or a resilient sleeve style.

AVA Documents
Document Sharing Hub

Full document details: IEC 61754-13-2024

5 Interfaces

5.1 General

The following pages define the standard interfaces for the type FC connector family. This document contains the following standard interfaces:

- interface IEC 61754-13-1: Plug connector interface (see Figure 1)
- interface IEC 61754-13-2: Adaptor connector interface (see Figure 2 and Figure 3)
- interface IEC 61754-13-3: Active device receptacle interface (see Figure 4 and Figure 5)

The plug of interface IEC 61754-13-1 has a ferrule with a spherically polished ferrule endface, and realizes physical contact (PC).

NOTE The standard interface number is a number for distinguishing the standard interfaces, not the standard number.

5.2 Intermateability

Table 1 shows the intermateability of interfaces.

Table 1 – Intermateability of interfaces

Plugs	Adaptors	Active device receptacles
	IEC 61754-13-2	IEC 61754-13-3
IEC 61754-13-1	Mate	Mate

5.3 Interfaces and dimensions

Figure 1 is an example of a plug connector interface. Table 2 gives dimensions of the plug connector interface and Table 3 gives the grade characteristics for the plug connector interface.

Documents
Document Sharing Hub
Full document details: IEC 61754-13-2024

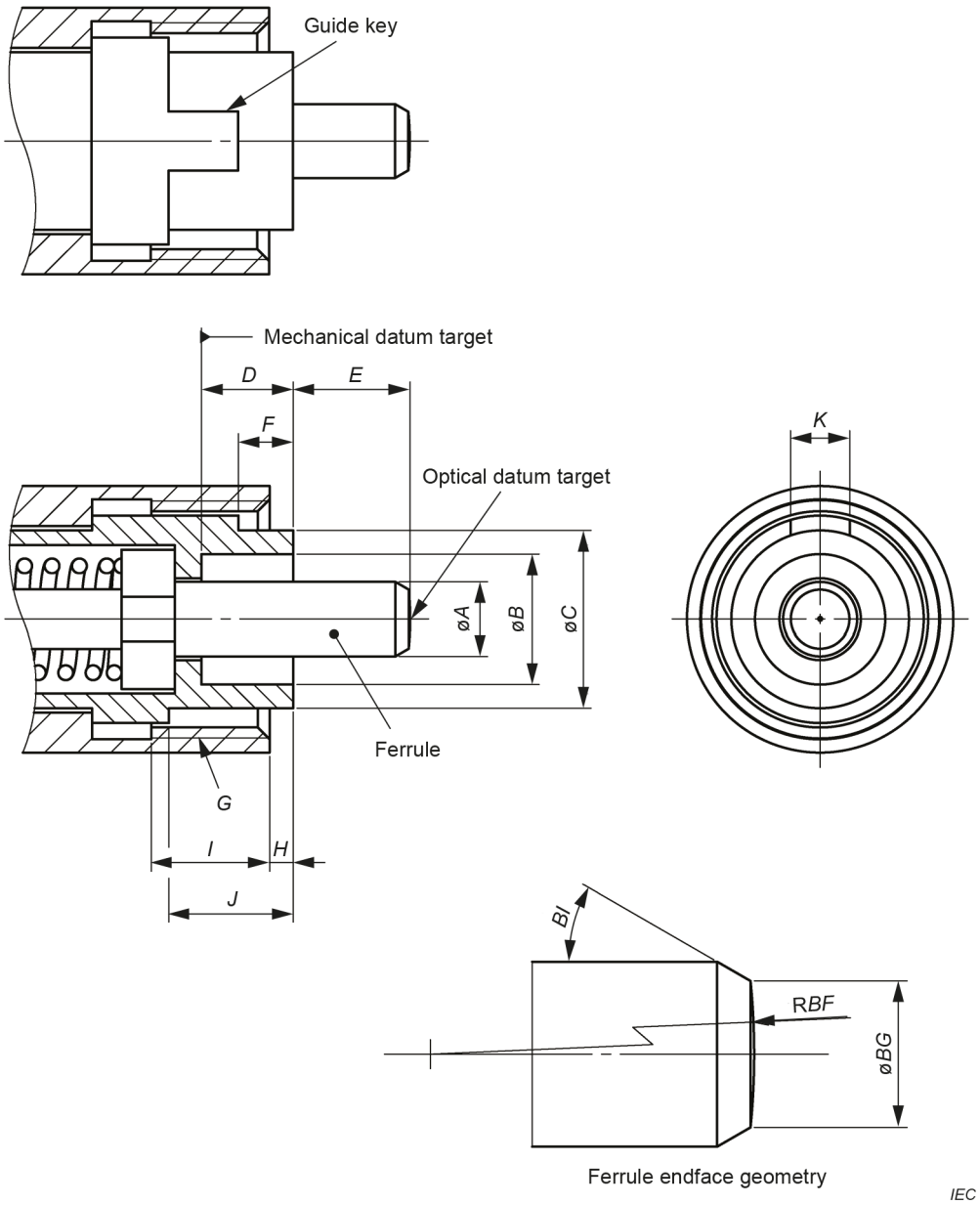

Figure 1 – Plug connector interface

Documents
Document Sharing Hub
Full document details: IEC 61754-13-2024

Table 2 – Dimensions of the plug connector interface

Dimensions in millimetres

Reference	Dimensions		Remarks
	Minimum	Maximum	
A			Diameter, see Table 3, ferrule grade [a)]
B	4,4	4,6	Diameter
C	5,8	6,0	Diameter
D	2,92	–	
E	3,75	4,10	[b)]
F	1,77	2,77	
G	M8 × 0,75-6 H		[c)]
H	–	1,1	[d)]
I	3,5	–	
J	3,95	–	
K	1,86	2,14	
BF	See IEC 61755-3-1		Radius [e)]
BG	See IEC 61755-3-1		Diameter [a)]
BI(°)	25	35	Degree [a)]

a) The outside diameter of the ferrule may be less than 2,498 mm in the range of 1,8 mm from the tip rearwards.

b) Dimension *E* is given for a plug endface when not mated. It is movable by a certain axial compression force, with direct contacting endfaces, and therefore dimension *E* is variable with a minimum length of 3,6 mm.

Ferrule compression force shall be 7,8 N to 11,8 N when dimension *E* is from 3,6 mm to 3,7 mm. Forces shall be validated for connectors with no fibre, primary coated fibre, or buffered fibre only.

c) M8 × 0,75 indicates a metric screw thread with a nominal diameter of 8 mm and a pitch of 0,75 mm. 6H represents the class of fit. It requires a way of escape from the thread rearwards.

d) The coupling sleeve shall be movable towards right and left directions. This dimension is given when the coupling sleeve is moved furthermost to the right.

e) Dome eccentricity of the spherically polished endface shall be less than 0,05 mm.

Documents
Document Sharing Hub
Full document details: IEC 61754-13-2024

Table 3 – Grade characteristics for plug connector

Dimensions in millimetres

Grade	Dimensions	
	A	
	Minimum	Maximum
A [a)]	Refer to IEC 61755-3-1	
B [a)]	Refer to IEC 61755-3-1	
C [a)]	Refer to IEC 61755-3-1	
D [a)]	Refer to IEC 61755-3-1	
A_m [a, b)]	Grade not specified at this time	
B_m [a, b)]	2,497	2,500
C_m [a, b)]	2,494	2,500

[a)] Add grade number to the interface reference number from 5.1.

[b)] See IEC 63267-2-1 for guidance.

Figure 2 is an example of an adaptor connector interface. Table 4 gives dimensions of the adaptor connector interface.

Documents
Document Sharing Hub

Full document details: IEC 61754-13-2024