IEC 61754-27

Edition 1.0 2013-05

INTERNATIONAL STANDARD

NORME INTERNATIONALE

Fibre optic interconnecting devices and passive components – Fibre optic connector interfaces – Part 27: Type M12-FO connector family

Dispositifs d'interconnexion et composants passifs à fibres optiques – Interfaces de connecteurs pour fibres optiques – Partie 27: Famille de connecteurs de type M12-FO

IEC 61754-27:2013

Documents
Document Sharing Hub

Full document details: IEC 61754-27 2013

THIS PUBLICATION IS COPYRIGHT PROTECTED

Copyright © 2013 IEC, Geneva, Switzerland

All rights reserved. Unless otherwise specified, no part of this publication may be reproduced or utilized in any form or by any means, electronic or mechanical, including photocopying and microfilm, without permission in writing from either IEC or IEC's member National Committee in the country of the requester.
If you have any questions about IEC copyright or have an enquiry about obtaining additional rights to this publication, please contact the address below or your local IEC member National Committee for further information.

Droits de reproduction réservés. Sauf indication contraire, aucune partie de cette publication ne peut être reproduite ni utilisée sous quelque forme que ce soit et par aucun procédé, électronique ou mécanique, y compris la photocopie et les microfilms, sans l'accord écrit de la CEI ou du Comité national de la CEI du pays du demandeur.
Si vous avez des questions sur le copyright de la CEI ou si vous désirez obtenir des droits supplémentaires sur cette publication, utilisez les coordonnées ci-après ou contactez le Comité national de la CEI de votre pays de résidence.

IEC Central Office
3, rue de Varembé
CH-1211 Geneva 20
Switzerland

Tel.: +41 22 919 02 11
Fax: +41 22 919 03 00
info@iec.ch
www.iec.ch

About the IEC

The International Electrotechnical Commission (IEC) is the leading global organization that prepares and publishes International Standards for all electrical, electronic and related technologies.

About IEC publications

The technical content of IEC publications is kept under constant review by the IEC. Please make sure that you have the latest edition, a corrigenda or an amendment might have been published.

Useful links:

IEC publications search - www.iec.ch/searchpub

The advanced search enables you to find IEC publications by a variety of criteria (reference number, text, technical committee,…).
It also gives information on projects, replaced and withdrawn publications.

IEC Just Published - webstore.iec.ch/justpublished

Stay up to date on all new IEC publications. Just Published details all new publications released. Available on-line and also once a month by email.

Electropedia - www.electropedia.org

The world's leading online dictionary of electronic and electrical terms containing more than 30 000 terms and definitions in English and French, with equivalent terms in additional languages. Also known as the International Electrotechnical Vocabulary (IEV) on-line.

Customer Service Centre - webstore.iec.ch/csc

If you wish to give us your feedback on this publication or need further assistance, please contact the Customer Service Centre: csc@iec.ch.

A propos de la CEI

La Commission Electrotechnique Internationale (CEI) est la première organisation mondiale qui élabore et publie des Normes internationales pour tout ce qui a trait à l'électricité, à l'électronique et aux technologies apparentées.

A propos des publications CEI

Le contenu technique des publications de la CEI est constamment revu. Veuillez vous assurer que vous possédez l'édition la plus récente, un corrigendum ou amendement peut avoir été publié.

Liens utiles:

Recherche de publications CEI - www.iec.ch/searchpub

La recherche avancée vous permet de trouver des publications CEI en utilisant différents critères (numéro de référence, texte, comité d'études,…).
Elle donne aussi des informations sur les projets et les publications remplacées ou retirées.

Just Published CEI - webstore.iec.ch/justpublished

Restez informé sur les nouvelles publications de la CEI. Just Published détaille les nouvelles publications parues. Disponible en ligne et aussi une fois par mois par email.

Electropedia - www.electropedia.org

Le premier dictionnaire en ligne au monde de termes électroniques et électriques. Il contient plus de 30 000 termes et définitions en anglais et en français, ainsi que les termes équivalents dans les langues additionnelles. Egalement appelé Vocabulaire Electrotechnique International (VEI) en ligne.

Service Clients - webstore.iec.ch/csc

Si vous désirez nous donner des commentaires sur cette publication ou si vous avez des questions contactez-nous: csc@iec.ch.

Documents
Document Sharing Hub

Full document details: IEC 61754-27 2013

IEC 61754-27

Edition 1.0 2013-05

INTERNATIONAL STANDARD

NORME INTERNATIONALE

Fibre optic interconnecting devices and passive components – Fibre optic connector interfaces – Part 27: Type M12-FO connector family

Dispositifs d'interconnexion et composants passifs à fibres optiques – Interfaces de connecteurs pour fibres optiques – Partie 27: Famille de connecteurs de type M12-FO

INTERNATIONAL
ELECTROTECHNICAL
COMMISSION

COMMISSION
ELECTROTECHNIQUE
INTERNATIONALE

PRICE CODE
CODE PRIX **N**

ICS 33.180.20

ISBN 978-2-83220-809-0

Warning! Make sure that you obtained this publication from an authorized distributor.
Attention! Veuillez vous assurer que vous avez obtenu cette publication via un distributeur agréé.

AVA Documents
Document Sharing Hub

® Registered trademark of the International Electrotechnical Commission
Marque déposée de la Commission Electrotechnique Internationale

Full document details: IEC 61754-27 2013

CONTENTS

FOREWORD 3
1 Scope 5
2 Normative references 5
3 Description 5
4 Interfaces 6
4.1 General 6
4.2 Part 27-1 plug connector interface for category B1.1 or B1.3 fibres 6
4.3 Part 27-2 plug connector interface for category A3c or A3d fibres 8
4.4 Part 27-3 plug connector interface for category A4a or A4d fibres 10
4.5 Part 27-4 adaptor connector interface 12
4.6 Part 27-5 active device interface 13
Bibliography 15

Figure 1 – Plug connector interface PC 7
Figure 2 – Detail of spherically polished ferrule PC endface 8
Figure 3 – Plug connector interface for category A3c or A3d fibres 9
Figure 4 – Detail of polished ferrule endface for category A3c or A3d fibres 10
Figure 5 – Plug connector interface for category A4a or A4d fibres 11
Figure 6 – Detail of polished ferrule endface for category A4a or A4d fibres 12
Figure 7 – Adaptor connector interface 13
Figure 8 – Active device interface 14

Table 1 – Interfaces 6
Table 2 – Intermatability 6
Table 3 – Dimensions for the details in Figure 1 7
Table 4 – Dimensions for the details in Figure 2 8
Table 5 – Ferrule grades 8
Table 6 – Dimensions of plug connector interface for category A3c or A3d fibres 9
Table 7 – Dimensions for the details in Figure 4 10
Table 8 – Ferrule grades 10
Table 9 – Dimensions of plug connector interface for category A4a or A4d fibres 11
Table 10 – Dimensions for the details in Figure 6 12
Table 11 – Ferrule grades 12
Table 12 – Dimensions of adaptor connector interface 13
Table 13 – Dimensions of active device interface 14

Documents
Document Sharing Hub

Full document details: IEC 61754-27 2013

INTERNATIONAL ELECTROTECHNICAL COMMISSION

FIBRE OPTIC INTERCONNECTING DEVICES AND PASSIVE COMPONENTS – FIBRE OPTIC CONNECTOR INTERFACES –

Part 27: Type M12-FO connector family

FOREWORD

1) The International Electrotechnical Commission (IEC) is a worldwide organization for standardization comprising all national electrotechnical committees (IEC National Committees). The object of IEC is to promote international co-operation on all questions concerning standardization in the electrical and electronic fields. To this end and in addition to other activities, IEC publishes International Standards, Technical Specifications, Technical Reports, Publicly Available Specifications (PAS) and Guides (hereafter referred to as "IEC Publication(s)"). Their preparation is entrusted to technical committees; any IEC National Committee interested in the subject dealt with may participate in this preparatory work. International, governmental and non-governmental organizations liaising with the IEC also participate in this preparation. IEC collaborates closely with the International Organization for Standardization (ISO) in accordance with conditions determined by agreement between the two organizations.
2) The formal decisions or agreements of IEC on technical matters express, as nearly as possible, an international consensus of opinion on the relevant subjects since each technical committee has representation from all interested IEC National Committees.
3) IEC Publications have the form of recommendations for international use and are accepted by IEC National Committees in that sense. While all reasonable efforts are made to ensure that the technical content of IEC Publications is accurate, IEC cannot be held responsible for the way in which they are used or for any misinterpretation by any end user.
4) In order to promote international uniformity, IEC National Committees undertake to apply IEC Publications transparently to the maximum extent possible in their national and regional publications. Any divergence between any IEC Publication and the corresponding national or regional publication shall be clearly indicated in the latter.
5) IEC itself does not provide any attestation of conformity. Independent certification bodies provide conformity assessment services and, in some areas, access to IEC marks of conformity. IEC is not responsible for any services carried out by independent certification bodies.
6) All users should ensure that they have the latest edition of this publication.
7) No liability shall attach to IEC or its directors, employees, servants or agents including individual experts and members of its technical committees and IEC National Committees for any personal injury, property damage or other damage of any nature whatsoever, whether direct or indirect, or for costs (including legal fees) and expenses arising out of the publication, use of, or reliance upon, this IEC Publication or any other IEC Publications.
8) Attention is drawn to the Normative references cited in this publication. Use of the referenced publications is indispensable for the correct application of this publication.
9) Attention is drawn to the possibility that some of the elements of this IEC Publication may be the subject of patent rights. IEC shall not be held responsible for identifying any or all such patent rights.

International Standard IEC 61754-27 has been prepared by subcommittee 86B: Fibre optic interconnecting devices and passive components, of IEC technical committee 86: Fibre optics.

The text of this standard is based on the following documents:

FDIS	Report on voting
86B/3597/FDIS	86B/3626/RVD

Full information on the voting for the approval of this standard can be found in the report on voting indicated in the above table.

This publication has been drafted in accordance with the ISO/IEC Directives, Part 2.

AVA Documents
Document Sharing Hub

Full document details: IEC 61754-27 2013

A list of all parts of the IEC 61754 series, published under the general title, *Fibre optic interconnecting and passive components – Fibre optic connector interfaces*, can be found on the IEC website.

Future standards in this series will carry the new general title as cited above. Titles of existing standards in this series will be updated at the time of the next edition.

The committee has decided that the contents of this publication will remain unchanged until the stability date indicated on the IEC web site under "http://webstore.iec.ch" in the data related to the specific publication. At this date, the publication will be

- reconfirmed,
- withdrawn,
- replaced by a revised edition, or
- amended.

Documents
Document Sharing Hub

Full document details: IEC 61754-27 2013

FIBRE OPTIC INTERCONNECTING DEVICES AND PASSIVE COMPONENTS – FIBRE OPTIC CONNECTOR INTERFACES –

Part 27: Type M12-FO connector family

1 Scope

This part of IEC 61754 defines the standard interface dimensions for the type M12-FO family of connectors.

This connector is of duplex plug/adaptor/plug configuration and designed for industrial environment as described in ISO/IEC TR 29106, severity class M_3 and I_3. Multiple designs for machines and equipment require solutions with different fibre types.

2 Normative references

The following documents, in whole or in part, are normatively referenced in this document and are indispensable for its application. For dated references, only the edition cited applies. For undated references, the latest edition of the referenced document (including any amendments) applies.

IEC 60529, *Degrees of protection provided by enclosures (IP Code)*

IEC 60793-2-30, *Optical fibres – Part 2-30: Product specifications – Sectional specification for category A3 multimode fibres*

IEC 60793-2-40, *Optical fibres – Part 2-40: Product specifications – Sectional specification for category A4 multimode fibres*

IEC 60793-2-50, *Optical fibres – Part 2-50: Product specifications – Sectional specification for class B single-mode fibres*

IEC 61076-2-101, *Connectors for electronic equipment – Product requirements – Part 2-101: Circular connectors – Detail specification for M12 connectors with screw-locking*

IEC 61755-3 (all parts 3), *Fibre optic connector optical interfaces – Part 3: Optical interface*

ISO/IEC TR 29106, *Information technology – Generic cabling – Introduction to the MICE environmental classification*

3 Description

The M12-FO connector family is a duplex plug connector set of plug/adaptor configuration which is characterized by a 2,5 mm nominal ferrule diameter and can be used for fibres as described in Table 1.

This circular connector includes a housing with a M12-thread screw locking mechanism and a protection according to IEC 60529, IP 65 and IP 67. Electrical M12-connectors are typically used for industrial process, measurement and control. They are described and dimensioned in IEC 61076-2-101 and additional information for the optical connector is given in this standard.

AVA Documents
Document Sharing Hub

Full document details: IEC 61754-27 2013

The coupling mechanism is spring loaded relative to the ferrules in the direction of the optical axes. The ferrules stand back from the front face in the unmated condition due to a shroud to shelter them from mechanical impact during handling and the mating process.

The plug and adaptor are equipped with four keys to define the mating orientation of the duplex connector. The optical alignment mechanism of the adaptor is from a resilient sleeve style. The alignment mechanism for the active device interface can be a rigid bore or a resilient sleeve.

4 Interfaces

4.1 General

This standard contains the interfaces for the type M12-FO connector family as described in Table 1. The interfaces are intermatable according to Table 2.

Table 1 – Interfaces

Interface	Title
27-1	Plug connector interface with spherical polished endface (PC) for IEC 60793-2-50 category B1.1 or B1.3 fibres.
27-2	Plug connector interface for IEC 60793-2-30 category A3c or A3d fibres.
27-3	Plug connector interface for IEC 60793-2-40 category A4a or A4d fibres.
27-4	Adaptor connector interface
27-5	Active device interface
NOTE A plug connector interface with angled polished endface (APC) 8° is not described.	

Table 2 – Intermatability

M12-FO connector family	IEC 61754-27 interface	Adaptor 27-4	Active device 27-5
Plug	27-1	Mate	Mate
	27-2	Mate	Mate
	27-3	Mate	Mate

4.2 Part 27-1 plug connector interface for category B1.1 or B1.3 fibres

The M12-FO plug connector interface with spherical polished endface (PC 0°, SM fibre) is described in Figures 1 and 2 and Tables 3 to 5. All dimensions are under mated conditions.

Documents
Document Sharing Hub
Full document details: IEC 61754-27 2013

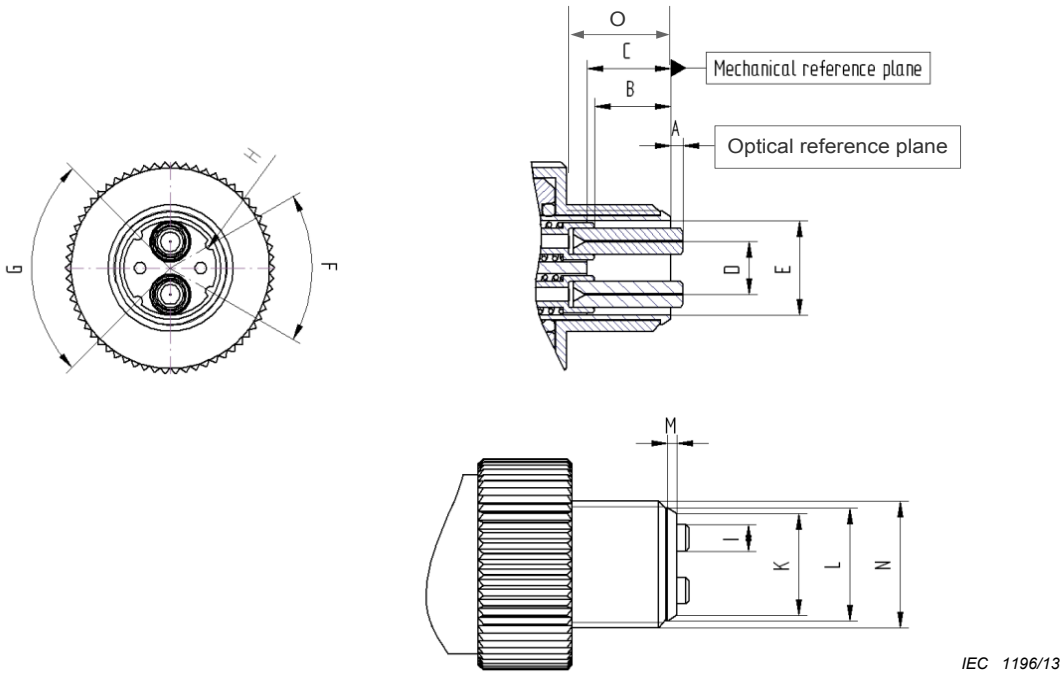

Figure 1 – Plug connector interface PC

Table 3 – Dimensions for the details in Figure 1

Reference	Dimensions mm			Remarks
	Minimum	Nominal	Maximum	
A[a]	1,0		1,3	Dimensions in unmated condition
B	7,0		7,5	
C	8,0		8,2	
D	4,95		5,05	
E	8,8		9,0	
F		60°		
G		90°		
H	R0,4		R0,5	
I	2,497		2,4 995	
K	9,6		9,8	
L	10,3		10,8	
M	0,8		1,0	
N		M12		
O	10			

[a] Ferrule compression force shall be from 7,8 N to 11,8 N when the ferrule is compressed to a point where A is 0,50 mm ± 0,10 mm.

Documents
Document Sharing Hub
Full document details: IEC 61754-27 2013

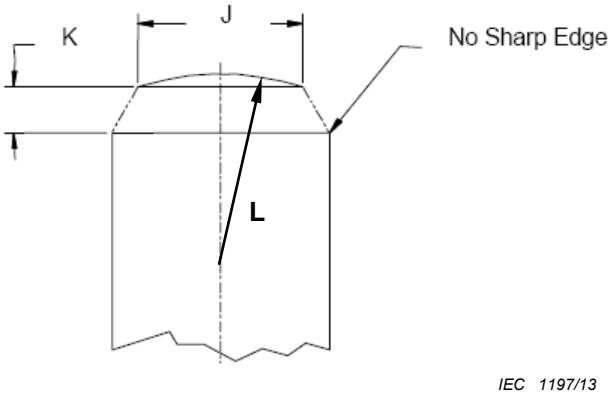

Figure 2 – Detail of spherically polished ferrule PC endface

Table 4 – Dimensions for the details in Figure 2

Reference	Dimensions mm		Remarks
	Minimum	Maximum	
J[a]	0,8	N/A	Diameter
K[b]	N/A	1,8	
L[c]	5	30	Radius

[a] Maximum value for J is not defined in the IEC 61755-3 series.

[b] Minimum value for K is not defined in the IEC 61755-3 series.

[c] Dome eccentricity of the spherical polished endface shall be less than 70 µm.

N/A = not applicable.

Table 5 – Ferrule grades

Precision grade level	Dimensions outer diameter mm		Remarks
	Minimum	Maximum	
1	2,4 985	2,4 995	
2	2,4 980	2,4 995	
3	2,4 970	2,4 995	

4.3 Part 27-2 plug connector interface for category A3c or A3d fibres

The M12-FO plug connector interface for category A3c or A3d fibres are described in Figures 3 and 4 and Tables 6 to 8. All dimensions are under mated conditions.

Documents
Document Sharing Hub
Full document details: IEC 61754-27 2013

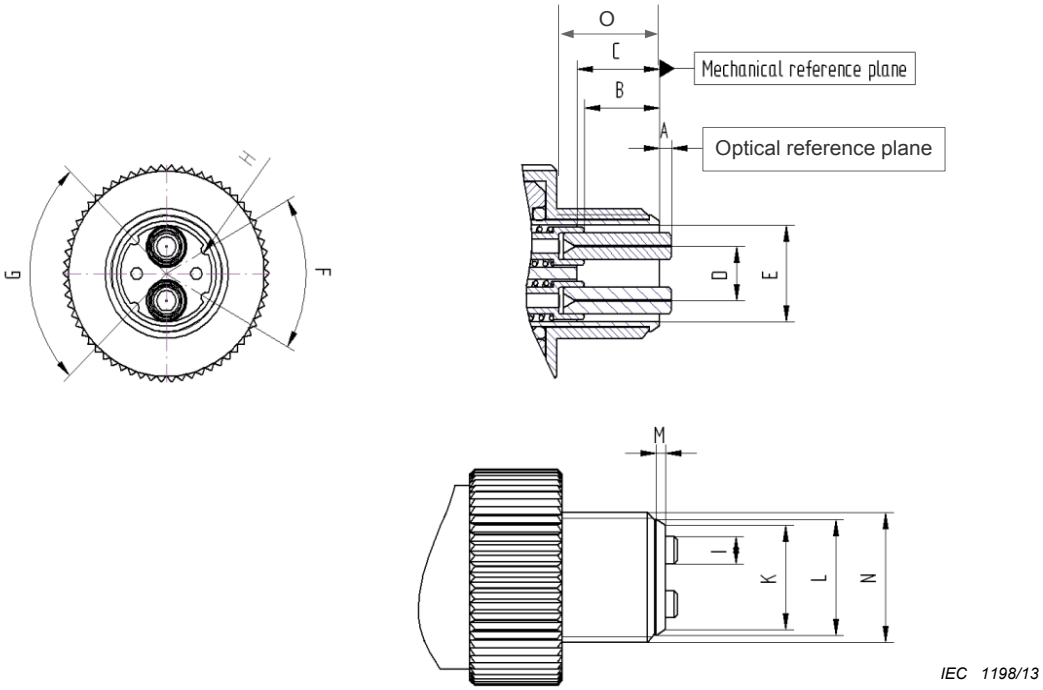

Figure 3 – Plug connector interface for category A3c or A3d fibres

Table 6 – Dimensions of plug connector interface for category A3c or A3d fibres

Reference	Dimensions mm			Remarks
	Minimum	Nominal	Maximum	
A[a]	1,0		1,3	Dimensions in unmated condition
B	7,0		7,5	
C	8,0		8,2	
D	4,95		5,05	
E	8,8		9,0	
F		60°		
G		90°		
H	R0,4		R0,5	
I	2,497		2,4 995	
K	9,6		9,8	
L	10,3		10,8	
M	0,8		1,0	
N		M12		
O	10			

[a] Ferrule compression force shall be from 7,8 N to 11,8 N when the ferrule is compressed to a point where A is 0,50 mm ± 0,10 mm.

Documents
Document Sharing Hub
Full document details: IEC 61754-27 2013