IEC 61754-31

Edition 1.0 2016-01

INTERNATIONAL STANDARD

NORME INTERNATIONALE

Fibre optic interconnecting devices and passive components – Fibre optic connector interfaces – Part 31: Type N-FO connector family

Dispositifs d'interconnexion et composants passifs à fibres optiques – Interfaces de connecteurs à fibres optiques – Partie 31: Famille de connecteurs de type N-FO

IEC 61754-31:2016-01(en-fr)

Documents
Document Sharing Hub
Full document details: IEC 61754-31 2016

THIS PUBLICATION IS COPYRIGHT PROTECTED

Copyright © 2016 IEC, Geneva, Switzerland

All rights reserved. Unless otherwise specified, no part of this publication may be reproduced or utilized in any form or by any means, electronic or mechanical, including photocopying and microfilm, without permission in writing from either IEC or IEC's member National Committee in the country of the requester. If you have any questions about IEC copyright or have an enquiry about obtaining additional rights to this publication, please contact the address below or your local IEC member National Committee for further information.

Droits de reproduction réservés. Sauf indication contraire, aucune partie de cette publication ne peut être reproduite ni utilisée sous quelque forme que ce soit et par aucun procédé, électronique ou mécanique, y compris la photocopie et les microfilms, sans l'accord écrit de l'IEC ou du Comité national de l'IEC du pays du demandeur. Si vous avez des questions sur le copyright de l'IEC ou si vous désirez obtenir des droits supplémentaires sur cette publication, utilisez les coordonnées ci-après ou contactez le Comité national de l'IEC de votre pays de résidence.

IEC Central Office
3, rue de Varembé
CH-1211 Geneva 20
Switzerland

Tel.: +41 22 919 02 11
Fax: +41 22 919 03 00
info@iec.ch
www.iec.ch

About the IEC
The International Electrotechnical Commission (IEC) is the leading global organization that prepares and publishes International Standards for all electrical, electronic and related technologies.

About IEC publications
The technical content of IEC publications is kept under constant review by the IEC. Please make sure that you have the latest edition, a corrigenda or an amendment might have been published.

IEC Catalogue - webstore.iec.ch/catalogue
The stand-alone application for consulting the entire bibliographical information on IEC International Standards, Technical Specifications, Technical Reports and other documents. Available for PC, Mac OS, Android Tablets and iPad.

IEC publications search - www.iec.ch/searchpub
The advanced search enables to find IEC publications by a variety of criteria (reference number, text, technical committee,…). It also gives information on projects, replaced and withdrawn publications.

IEC Just Published - webstore.iec.ch/justpublished
Stay up to date on all new IEC publications. Just Published details all new publications released. Available online and also once a month by email.

Electropedia - www.electropedia.org
The world's leading online dictionary of electronic and electrical terms containing 20 000 terms and definitions in English and French, with equivalent terms in 15 additional languages. Also known as the International Electrotechnical Vocabulary (IEV) online.

IEC Glossary - std.iec.ch/glossary
65 000 electrotechnical terminology entries in English and French extracted from the Terms and Definitions clause of IEC publications issued since 2002. Some entries have been collected from earlier publications of IEC TC 37, 77, 86 and CISPR.

IEC Customer Service Centre - webstore.iec.ch/csc
If you wish to give us your feedback on this publication or need further assistance, please contact the Customer Service Centre: csc@iec.ch.

A propos de l'IEC
La Commission Electrotechnique Internationale (IEC) est la première organisation mondiale qui élabore et publie des Normes internationales pour tout ce qui a trait à l'électricité, à l'électronique et aux technologies apparentées.

A propos des publications IEC
Le contenu technique des publications IEC est constamment revu. Veuillez vous assurer que vous possédez l'édition la plus récente, un corrigendum ou amendement peut avoir été publié.

Catalogue IEC - webstore.iec.ch/catalogue
Application autonome pour consulter tous les renseignements bibliographiques sur les Normes internationales, Spécifications techniques, Rapports techniques et autres documents de l'IEC. Disponible pour PC, Mac OS, tablettes Android et iPad.

Recherche de publications IEC - www.iec.ch/searchpub

La recherche avancée permet de trouver des publications IEC en utilisant différents critères (numéro de référence, texte, comité d'études,…). Elle donne aussi des informations sur les projets et les publications remplacées ou retirées.

IEC Just Published - webstore.iec.ch/justpublished

Restez informé sur les nouvelles publications IEC. Just Published détaille les nouvelles publications parues. Disponible en ligne et aussi une fois par mois par email.

Electropedia - www.electropedia.org

Le premier dictionnaire en ligne de termes électroniques et électriques. Il contient 20 000 termes et définitions en anglais et en français, ainsi que les termes équivalents dans 15 langues additionnelles. Egalement appelé Vocabulaire Electrotechnique International (IEV) en ligne.

Glossaire IEC - std.iec.ch/glossary
65 000 entrées terminologiques électrotechniques, en anglais et en français, extraites des articles Termes et Définitions des publications IEC parues depuis 2002. Plus certaines entrées antérieures extraites des publications des CE 37, 77, 86 et CISPR de l'IEC.

Service Clients - webstore.iec.ch/csc

Si vous désirez nous donner des commentaires sur cette publication ou si vous avez des questions contactez-nous: csc@iec.ch.

Documents
Document Sharing Hub

Full document details: IEC 61754-31 2016

IEC 61754-31

Edition 1.0 2016-01

INTERNATIONAL STANDARD

NORME INTERNATIONALE

Fibre optic interconnecting devices and passive components – Fibre optic connector interfaces – Part 31: Type N-FO connector family

Dispositifs d'interconnexion et composants passifs à fibres optiques – Interfaces de connecteurs à fibres optiques – Partie 31: Famille de connecteurs de type N-FO

INTERNATIONAL
ELECTROTECHNICAL
COMMISSION

COMMISSION
ELECTROTECHNIQUE
INTERNATIONALE

ICS 33.180.20

ISBN 978-2-8322-3128-9

Warning! Make sure that you obtained this publication from an authorized distributor.
Attention! Veuillez vous assurer que vous avez obtenu cette publication via un distributeur agréé.

® Registered trademark of the International Electrotechnical Commission
Marque déposée de la Commission Electrotechnique Internationale

AVA Documents
Document Sharing Hub

Full document details: IEC 61754-31 2016

CONTENTS

FOREWORD 3
INTRODUCTION 5
1 Scope 6
2 Normative references 6
3 Description 6
3.1 General 6
3.2 Two way system 6
3.3 Four way system 6
4 Interfaces 7
5 Two way connector interface 7
5.1 Two way plug connector interface 7
5.2 Two way socket connector interface 9
6 Four way connector interface 11
6.1 Four way plug connector interface 11
6.2 Four way socket connector interface 13
7 Endface geometry 15
8 Ferrule grades 16
9 Pin gauge for plug connector 16
Bibliography 18

Figure 1 – Two way plug connector (isometric view) 7
Figure 2 – Two way plug connector mating dimensions 8
Figure 3 – Two way socket connector (isometric view) 9
Figure 4 – Two way socket connector mating dimensions 10
Figure 5 – Four way plug connector (isometric view) 12
Figure 6 – Four way plug connector mating dimensions 12
Figure 7 – Four way socket connector (isometric view) 13
Figure 8 – Four way socket connector mating dimensions 14
Figure 9 – PC endface geometry (expanded view) 15
Figure 10 – Pin gauge for plug connector 16

Table 1 – Intermateability between plugs and sockets within the IEC 61754-31 series of interfaces 7
Table 2 – Two way plug connector dimensions 9
Table 3 – Two way socket connector dimensions 11
Table 4 – Four way plug connector dimensions 13
Table 5 – Four way socket connector dimensions 15
Table 6 – Endface dimensions 16
Table 7 – Ferrule grades 16
Table 8 – Pin gauge dimensions 17

Documents
Document Sharing Hub

Full document details: IEC 61754-31 2016

INTERNATIONAL ELECTROTECHNICAL COMMISSION

FIBRE OPTIC INTERCONNECTING DEVICES AND PASSIVE COMPONENTS – FIBRE OPTIC CONNECTOR INTERFACES –

Part 31: Type N-FO connector family

FOREWORD

1) The International Electrotechnical Commission (IEC) is a worldwide organization for standardization comprising all national electrotechnical committees (IEC National Committees). The object of IEC is to promote international co-operation on all questions concerning standardization in the electrical and electronic fields. To this end and in addition to other activities, IEC publishes International Standards, Technical Specifications, Technical Reports, Publicly Available Specifications (PAS) and Guides (hereafter referred to as "IEC Publication(s)"). Their preparation is entrusted to technical committees; any IEC National Committee interested in the subject dealt with may participate in this preparatory work. International, governmental and non-governmental organizations liaising with the IEC also participate in this preparation. IEC collaborates closely with the International Organization for Standardization (ISO) in accordance with conditions determined by agreement between the two organizations.
2) The formal decisions or agreements of IEC on technical matters express, as nearly as possible, an international consensus of opinion on the relevant subjects since each technical committee has representation from all interested IEC National Committees.
3) IEC Publications have the form of recommendations for international use and are accepted by IEC National Committees in that sense. While all reasonable efforts are made to ensure that the technical content of IEC Publications is accurate, IEC cannot be held responsible for the way in which they are used or for any misinterpretation by any end user.
4) In order to promote international uniformity, IEC National Committees undertake to apply IEC Publications transparently to the maximum extent possible in their national and regional publications. Any divergence between any IEC Publication and the corresponding national or regional publication shall be clearly indicated in the latter.
5) IEC itself does not provide any attestation of conformity. Independent certification bodies provide conformity assessment services and, in some areas, access to IEC marks of conformity. IEC is not responsible for any services carried out by independent certification bodies.
6) All users should ensure that they have the latest edition of this publication.
7) No liability shall attach to IEC or its directors, employees, servants or agents including individual experts and members of its technical committees and IEC National Committees for any personal injury, property damage or other damage of any nature whatsoever, whether direct or indirect, or for costs (including legal fees) and expenses arising out of the publication, use of, or reliance upon, this IEC Publication or any other IEC Publications.
8) Attention is drawn to the Normative references cited in this publication. Use of the referenced publications is indispensable for the correct application of this publication.
9) Attention is drawn to the possibility that some of the elements of this IEC Publication may be the subject of patent rights. IEC shall not be held responsible for identifying any or all such patent rights.

International Standard IEC 61754-31 has been prepared by subcommittee 86B: Fibre optic interconnecting devices and passive components, of IEC technical committee 86: Fibre optics.

The text of this standard is based on the following documents:

FDIS	Report on voting
86B/3961/FDIS	86B/3973/RVD

Full information on the voting for the approval of this standard can be found in the report on voting indicated in the above table.

This publication has been drafted in accordance with the ISO/IEC Directives, Part 2.

Documents
Document Sharing Hub

Full document details: IEC 61754-31 2016

A list of all parts in the IEC 61754 series, published under the general title *Fibre optic interconnecting devices and passive components – Fibre optic connector interfaces*, can be found on the IEC website.

The committee has decided that the contents of this publication will remain unchanged until the stability date indicated on the IEC website under "http://webstore.iec.ch" in the data related to the specific publication. At this date, the publication will be

- reconfirmed,
- withdrawn,
- replaced by a revised edition, or
- amended.

Documents
Document Sharing Hub

Full document details: IEC 61754-31 2016

INTRODUCTION

The International Electrotechnical Commission (IEC) draws attention to the fact that it is claimed that compliance with this document may involve the use of a patent concerning IEC 61754-31.

IEC takes no position concerning the evidence, validity and scope of this patent right.

The holder of this patent right has assured the IEC that he/she is willing to negotiate licences under reasonable and non-discriminatory terms and conditions with applicants throughout the world. In this respect, the statement of the holder of this patent right is registered with IEC. Information may be obtained from:

Huber+Suhner AG

Degersheimerstrasse 14

9100 Herisau

Switzerland

Attention is drawn to the possibility that some of the elements of this document may be the subject of patent rights other than those identified above. IEC shall not be held responsible for identifying any or all such patent rights.

ISO (www.iso.org/patents) and IEC (http://patents.iec.ch) maintain online data bases of patents relevant to their standards. Users are encouraged to consult the data bases for the most up to date information concerning patents.

Documents
Document Sharing Hub

Full document details: IEC 61754-31 2016

FIBRE OPTIC INTERCONNECTING DEVICES AND PASSIVE COMPONENTS – FIBRE OPTIC CONNECTOR INTERFACES –

Part 31: Type N-FO connector family

1 Scope

This part of IEC 61754 defines the standard connector interface dimensions for the two way and four way type N-FO family of connectors.

2 Normative references

The following documents, in whole or in part, are normatively referenced in this document and are indispensable for its application. For dated references, only the edition cited applies. For undated references, the latest edition of the referenced document (including any amendments) applies.

IEC 61754-1, *Fibre optic interconnecting devices and passive components – Fibre optic connector interfaces – Part 1: General and guidance*

IEC 61755-3 (all parts), *Fibre optic interconnecting devices and passive components – Connector optical interfaces – Connector parameters of non-dispersion shifted single mode physically contacting fibres*

3 Description

3.1 General

The N-FO connector family comprises a two way and four way circular plug connector and socket set. The plug connector in each case includes a spring loaded threaded coupling nut and the plug shell features a single keyway which is used to orient it with a key in the socket with which it is being mated. The 1,25 mm non-angle polished ferrules used within the connectors are aligned using resilient sleeves housed within the plug.

3.2 Two way system

This system consists of two spring loaded ferrules within each connector body. The pitch between the two fibre centres is nominally 3,0 mm.

It has a threaded coupling mechanism, which is designed to be tightened to a torque of 1 Nm to 2 Nm.

3.3 Four way system

This system consists of four spring loaded ferrules in a row within each connector body. The pitch between any two adjacent fibre centres is nominally 2,50 mm.

It has a threaded coupling mechanism, which is designed to be tightened to a torque of 1 Nm to 2 Nm.

Documents
Document Sharing Hub
Full document details: IEC 61754-31 2016

4 Interfaces

General requirements defined in IEC 61754-1 are valid for this standard.

This standard contains the following standard interfaces:

Interface IEC 61754-31-1: two way plug connector interface

Interface IEC 61754-31-2: two way socket connector interface

Interface IEC 61754-31-3: four way plug connector interface

Interface IEC 61754-31-4: four way socket connector interface

The following plugs and sockets shown in Table 1 are intermateable.

Table 1 – Intermateability between plugs and sockets within the IEC 61754-31 series of interfaces

Plug interfaces	Socket interfaces	
	IEC 61754-31-2	IEC 61754-31-4
IEC 61754-31-1	mate	not mate
IEC 61754-31-3	not mate	mate

5 Two way connector interface

5.1 Two way plug connector interface

Figure 1 shows the plug connector. Figure 2 and Table 2 show the two way plug connector interface. The connector alignment feature is a resilient (split) alignment sleeve. The feature shall accept a pin gauge to its centre with a force of 1,0 N to 2,5 N under the condition that the plug ferrule is inserted into the feature from the other side until both pin gauge and plug ferrule butt against each other. The pin gauge shall be 1,249 0 mm nominal (see Table 8).

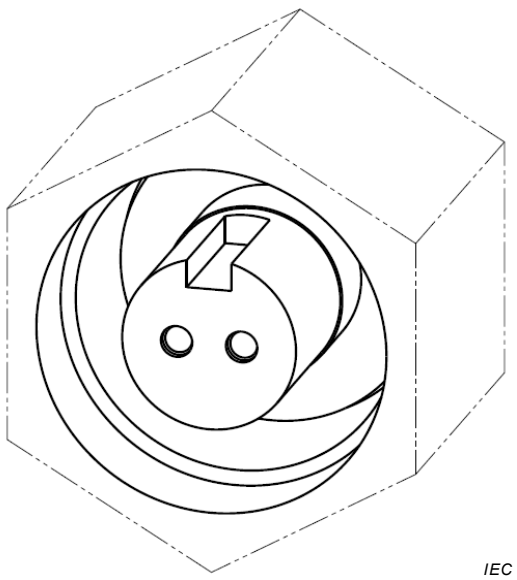

Figure 1 – Two way plug connector (isometric view)

Documents
Document Sharing Hub
Full document details: IEC 61754-31 2016

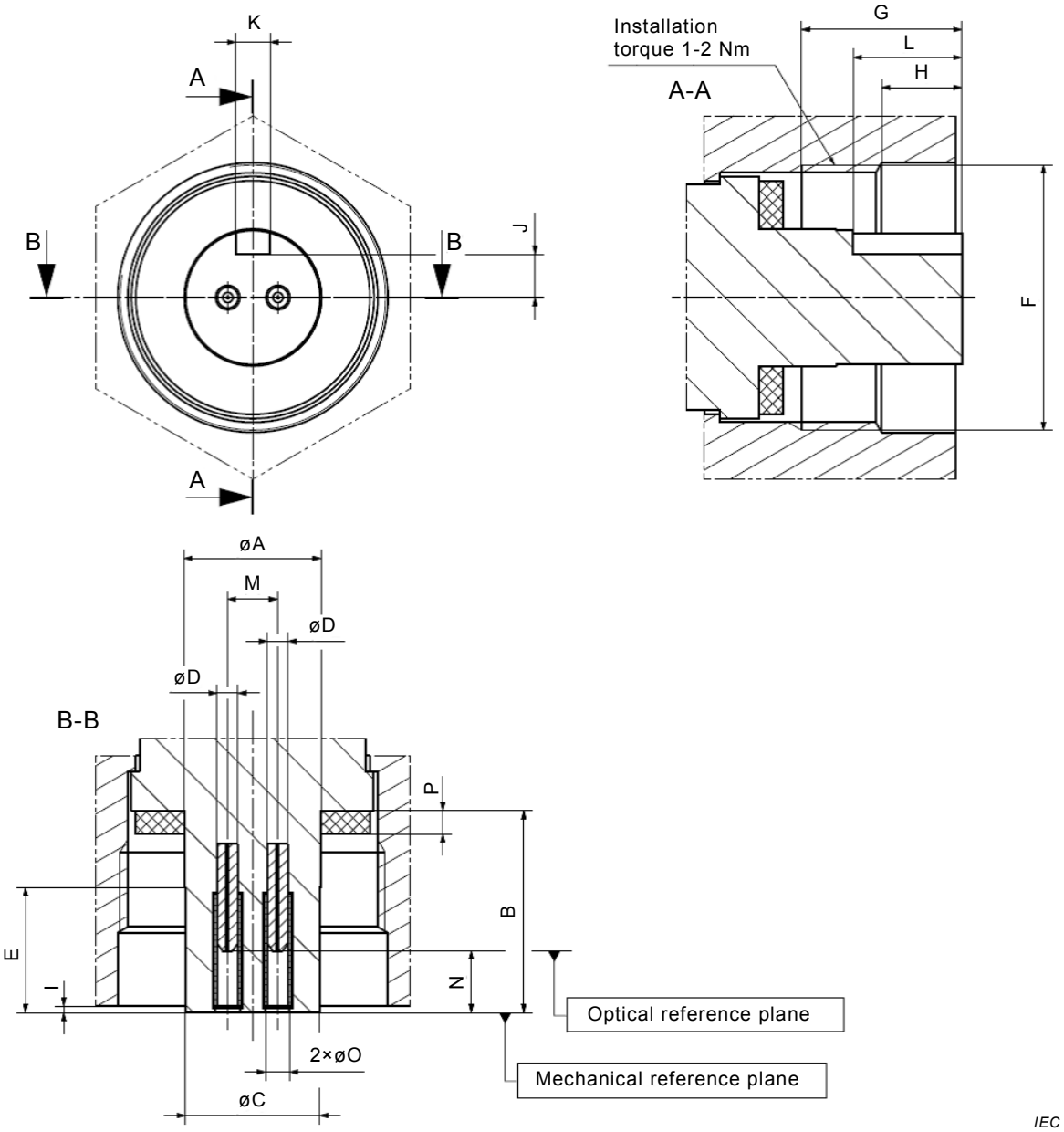

Figure 2 – Two way plug connector mating dimensions

Documents
Document Sharing Hub
Full document details: IEC 61754-31 2016

Table 2 – Two way plug connector dimensions

Reference	Dimensions mm		Remarks
	Minimum	Maximum	
A	8,20	8,23	
B	12,065	12,135	
C	8,015	8,055	
D	–	–	see Tables 6 and 7
E	7,455	7,555	
F	5/8-24 UNEF-2B		basic dimension
G	9,20	12,0	
H	4,20	4,90	
I	0,19	2,0	
J	2,56	2,64	
K	2,025	2,070	
L	6,20	12,0	
M	2,95	3,05	
N[a]	2,725	3,225	
O	1,42	1,48	
P	1,34	1,50	55 ± 5 Shore A

[a] Dimension N is given for a finished ferrule endface after polishing. The spring loaded ferrule is movable when an axial compression force is applied, and therefore dimension N is variable. The ferrule compression force shall be between 5,0 N and 6,0 N when the optical datum target, dimension N, is adjusted to be within 3,5 mm and 3,7 mm. Forces are for buffered fibre only, different cord constructions can result in higher forces, see IEC 60794-2-50.

5.2 Two way socket connector interface

Figure 3 shows the socket connector. Figure 4 and Table 3 show the two way socket connector interface.

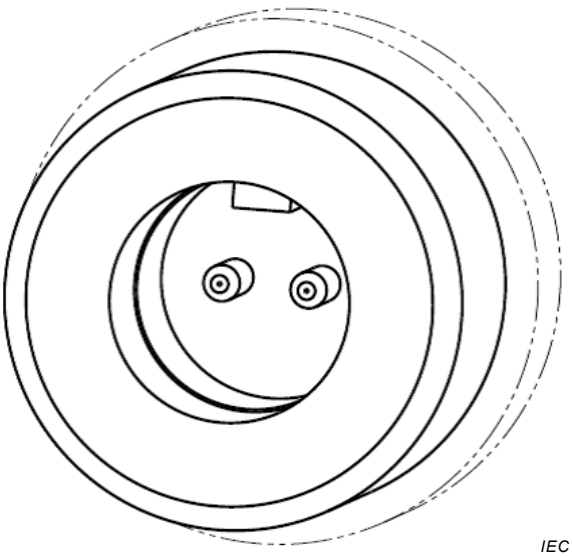

Figure 3 – Two way socket connector (isometric view)

Documents
Document Sharing Hub
Full document details: IEC 61754-31 2016

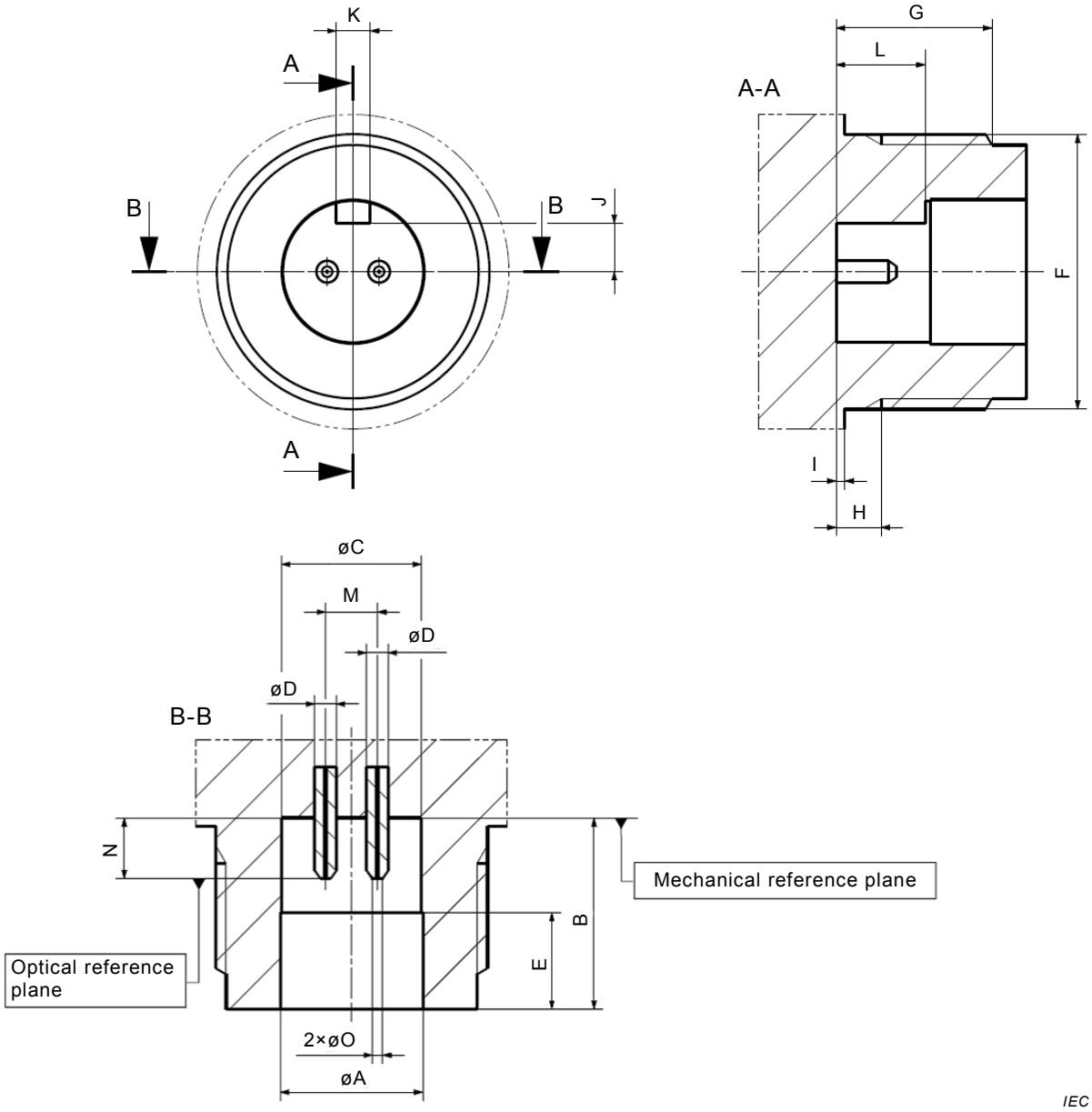

Figure 4 – Two way socket connector mating dimensions

Documents
Document Sharing Hub
Full document details: IEC 61754-31 2016