IEC 61754-35

Edition 1.0 2020-04

INTERNATIONAL STANDARD

NORME INTERNATIONALE

Fibre optic interconnecting devices and passive components – Fibre optic connector interfaces – Part 35: Type LSHE connector family for harsh environments

Dispositifs d'interconnexion et composants passifs fibroniques – Interfaces de connecteurs fibroniques – Partie 35: Famille de connecteurs de type LSHE pour environnements hostiles

IEC 61754-35:2020-04(en-fr)

Documents
Document Sharing Hub
Full document details: IEC 61754-35-2020

THIS PUBLICATION IS COPYRIGHT PROTECTED
Copyright © 2020 IEC, Geneva, Switzerland

All rights reserved. Unless otherwise specified, no part of this publication may be reproduced or utilized in any form or by any means, electronic or mechanical, including photocopying and microfilm, without permission in writing from either IEC or IEC's member National Committee in the country of the requester. If you have any questions about IEC copyright or have an enquiry about obtaining additional rights to this publication, please contact the address below or your local IEC member National Committee for further information.

Droits de reproduction réservés. Sauf indication contraire, aucune partie de cette publication ne peut être reproduite ni utilisée sous quelque forme que ce soit et par aucun procédé, électronique ou mécanique, y compris la photocopie et les microfilms, sans l'accord écrit de l'IEC ou du Comité national de l'IEC du pays du demandeur. Si vous avez des questions sur le copyright de l'IEC ou si vous désirez obtenir des droits supplémentaires sur cette publication, utilisez les coordonnées ci-après ou contactez le Comité national de l'IEC de votre pays de résidence.

IEC Central Office
3, rue de Varembé
CH-1211 Geneva 20
Switzerland

Tel.: +41 22 919 02 11
info@iec.ch
www.iec.ch

About the IEC
The International Electrotechnical Commission (IEC) is the leading global organization that prepares and publishes International Standards for all electrical, electronic and related technologies.

About IEC publications
The technical content of IEC publications is kept under constant review by the IEC. Please make sure that you have the latest edition, a corrigendum or an amendment might have been published.

IEC publications search - webstore.iec.ch/advsearchform
The advanced search enables to find IEC publications by a variety of criteria (reference number, text, technical committee,…). It also gives information on projects, replaced and withdrawn publications.

IEC Just Published - webstore.iec.ch/justpublished
Stay up to date on all new IEC publications. Just Published details all new publications released. Available online and once a month by email.

IEC Customer Service Centre - webstore.iec.ch/csc
If you wish to give us your feedback on this publication or need further assistance, please contact the Customer Service Centre: sales@iec.ch.

Electropedia - www.electropedia.org
The world's leading online dictionary on electrotechnology, containing more than 22 000 terminological entries in English and French, with equivalent terms in 16 additional languages. Also known as the International Electrotechnical Vocabulary (IEV) online.

IEC Glossary - std.iec.ch/glossary
67 000 electrotechnical terminology entries in English and French extracted from the Terms and Definitions clause of IEC publications issued since 2002. Some entries have been collected from earlier publications of IEC TC 37, 77, 86 and CISPR.

A propos de l'IEC
La Commission Electrotechnique Internationale (IEC) est la première organisation mondiale qui élabore et publie des Normes internationales pour tout ce qui a trait à l'électricité, à l'électronique et aux technologies apparentées.

A propos des publications IEC
Le contenu technique des publications IEC est constamment revu. Veuillez vous assurer que vous possédez l'édition la plus récente, un corrigendum ou amendement peut avoir été publié.

Recherche de publications IEC - webstore.iec.ch/advsearchform
La recherche avancée permet de trouver des publications IEC en utilisant différents critères (numéro de référence, texte, comité d'études,…). Elle donne aussi des informations sur les projets et les publications remplacées ou retirées.

IEC Just Published - webstore.iec.ch/justpublished
Restez informé sur les nouvelles publications IEC. Just Published détaille les nouvelles publications parues. Disponible en ligne et une fois par mois par email.

Service Clients - webstore.iec.ch/csc
Si vous désirez nous donner des commentaires sur cette publication ou si vous avez des questions contactez-nous: sales@iec.ch.

Electropedia - www.electropedia.org
Le premier dictionnaire d'électrotechnologie en ligne au monde, avec plus de 22 000 articles terminologiques en anglais et en français, ainsi que les termes équivalents dans 16 langues additionnelles. Egalement appelé Vocabulaire Electrotechnique International (IEV) en ligne.

Glossaire IEC - std.iec.ch/glossary
67 000 entrées terminologiques électrotechniques, en anglais et en français, extraites des articles Termes et Définitions des publications IEC parues depuis 2002. Plus certaines entrées antérieures extraites des publications des CE 37, 77, 86 et CISPR de l'IEC.

Documents
Document Sharing Hub

Full document details: IEC 61754-35-2020

IEC 61754-35

Edition 1.0 2020-04

INTERNATIONAL STANDARD

NORME INTERNATIONALE

Fibre optic interconnecting devices and passive components – Fibre optic connector interfaces – Part 35: Type LSHE connector family for harsh environments

Dispositifs d'interconnexion et composants passifs fibroniques – Interfaces de connecteurs fibroniques – Partie 35: Famille de connecteurs de type LSHE pour environnements hostiles

INTERNATIONAL
ELECTROTECHNICAL
COMMISSION

COMMISSION
ELECTROTECHNIQUE
INTERNATIONALE

ICS 33.180.20

ISBN 978-2-8322-8109-3

Warning! Make sure that you obtained this publication from an authorized distributor.
Attention! Veuillez vous assurer que vous avez obtenu cette publication via un distributeur agréé.

® Registered trademark of the International Electrotechnical Commission
Marque déposée de la Commission Electrotechnique Internationale

Documents
Document Sharing Hub

Full document details: IEC 61754-35-2020

CONTENTS

FOREWORD 3
INTRODUCTION 5
1 Scope 6
2 Normative references 6
3 Terms and definitions 6
4 Description 6
5 Connector Interfaces 6
5.1 General 6
5.2 Plug connector interface 7
5.3 Plug connector interface 9
6 Interfaces 11
7 Ferrule grades 12
8 Ferrule position 12
9 Pin gauge for adaptor 13
Annex A (informative) Panel cutout dimensions 15
Bibliography 16

Figure 1 – Plug connector interface (isometric view) 7
Figure 2 – Plug connector mating dimensions 8
Figure 3 – Expanded view from direction A (APC type) 8
Figure 4 – Socket connector interface (isometric view) 10
Figure 5 – Socket connector mating dimensions 10
Figure 6 – Expanded view from direction A (APC type) 10
Figure 7 – Insert's front view (top left) and side view without (top right) and with (bottom) adaptor 12
Figure 8 – Pin gauge for adaptor 14
Figure A.1 – Panel cutout for socket 15

Table 1 – Intermateability between plugs and sockets within the IEC 61754-35 family 7
Table 2 – Plug connector dimensions 9
Table 3 – Socket connector dimensions 11
Table 4 – Ferrule grades 12
Table 5 – Ferrule position 13
Table 6 – Insert dimensions 13
Table 7 – Pin gauge dimensions 14
Table A.1 – Dimensions of the panel cutout 15

Documents
Document Sharing Hub
Full document details: IEC 61754-35-2020

INTERNATIONAL ELECTROTECHNICAL COMMISSION

FIBRE OPTIC INTERCONNECTING DEVICES AND PASSIVE COMPONENTS – FIBRE OPTIC CONNECTOR INTERFACES –

Part 35: Type LSHE connector family for harsh environments

FOREWORD

1) The International Electrotechnical Commission (IEC) is a worldwide organization for standardization comprising all national electrotechnical committees (IEC National Committees). The object of IEC is to promote international co-operation on all questions concerning standardization in the electrical and electronic fields. To this end and in addition to other activities, IEC publishes International Standards, Technical Specifications, Technical Reports, Publicly Available Specifications (PAS) and Guides (hereafter referred to as "IEC Publication(s)"). Their preparation is entrusted to technical committees; any IEC National Committee interested in the subject dealt with may participate in this preparatory work. International, governmental and non-governmental organizations liaising with the IEC also participate in this preparation. IEC collaborates closely with the International Organization for Standardization (ISO) in accordance with conditions determined by agreement between the two organizations.
2) The formal decisions or agreements of IEC on technical matters express, as nearly as possible, an international consensus of opinion on the relevant subjects since each technical committee has representation from all interested IEC National Committees.
3) IEC Publications have the form of recommendations for international use and are accepted by IEC National Committees in that sense. While all reasonable efforts are made to ensure that the technical content of IEC Publications is accurate, IEC cannot be held responsible for the way in which they are used or for any misinterpretation by any end user.
4) In order to promote international uniformity, IEC National Committees undertake to apply IEC Publications transparently to the maximum extent possible in their national and regional publications. Any divergence between any IEC Publication and the corresponding national or regional publication shall be clearly indicated in the latter.
5) IEC itself does not provide any attestation of conformity. Independent certification bodies provide conformity assessment services and, in some areas, access to IEC marks of conformity. IEC is not responsible for any services carried out by independent certification bodies.
6) All users should ensure that they have the latest edition of this publication.
7) No liability shall attach to IEC or its directors, employees, servants or agents including individual experts and members of its technical committees and IEC National Committees for any personal injury, property damage or other damage of any nature whatsoever, whether direct or indirect, or for costs (including legal fees) and expenses arising out of the publication, use of, or reliance upon, this IEC Publication or any other IEC Publications.
8) Attention is drawn to the Normative references cited in this publication. Use of the referenced publications is indispensable for the correct application of this publication.
9) Attention is drawn to the possibility that some of the elements of this IEC Publication may be the subject of patent rights. IEC shall not be held responsible for identifying any or all such patent rights.

International Standard IEC 61754-35 has been prepared by subcommittee 86B: Fibre optic interconnecting devices and passive components, of IEC technical committee 86: Fibre optics.

The text of this International Standard is based on the following documents:

FDIS	Report on voting
86B/4271/FDIS	86B/4285/RVD

Full information on the voting for the approval of this International Standard can be found in the report on voting indicated in the above table.

This document has been drafted in accordance with the ISO/IEC Directives, Part 2.

A list of all parts in the IEC 61754 series, published under the general title *Fibre optic interconnecting devices and passive components – Fibre optic connector interfaces*, can be found on the IEC website.

Documents
Document Sharing Hub

The committee has decided that the contents of this document will remain unchanged until the stability date indicated on the IEC website under "http://webstore.iec.ch" in the data related to the specific document. At this date, the document will be

- reconfirmed,
- withdrawn,
- replaced by a revised edition, or
- amended.

Documents
Document Sharing Hub

Full document details: IEC 61754-35-2020

INTRODUCTION

The International Electrotechnical Commission (IEC) draws attention to the fact that it is claimed that compliance with this document may involve the use of a patent concerning connector structure given in clause 5.

IEC takes no position concerning the evidence, validity and scope of this patent right.

The holder of this patent right has assured the IEC that he/she is willing to negotiate licences under reasonable and non-discriminatory terms and conditions with applicants throughout the world. In this respect, the statement of the holder of this patent right is registered with IEC. Information may be obtained from:

DIAMOND SA

Via dei Patrizi 5

6616 Losone

Switzerland

Attention is drawn to the possibility that some of the elements of this document may be the subject of patent rights other than those identified above. IEC shall not be held responsible for identifying any or all such patent rights.

ISO (www.iso.org/patents) and IEC (http://patents.iec.ch) maintain on-line data bases of patents relevant to their standards. Users are encouraged to consult the data bases for the most up to date information concerning patents.

Documents
Document Sharing Hub

Full document details: IEC 61754-35-2020

FIBRE OPTIC INTERCONNECTING DEVICES AND PASSIVE COMPONENTS – FIBRE OPTIC CONNECTOR INTERFACES –

Part 35: Type LSHE connector family for harsh environments

1 Scope

This part of IEC 61754 defines the standard connector interface dimensions for LSHE family of connectors with up to four termini. This connector family is targeting deployment under harsh environmental conditions.

2 Normative references

The following documents are referred to in the text in such a way that some or all of their content constitutes requirements of this document. For dated references, only the edition cited applies. For undated references, the latest edition of the referenced document (including any amendments) applies.

IEC 61753-1, *Fibre optic interconnecting devices and passive components – Performance standard – Part 1: General and guidance*

IEC 61754-1, *Fibre optic interconnecting devices and passive components – Fibre optic connector interfaces – Part 1: General and guidance*

IEC 61755 (all parts), *Fibre optic interconnecting devices and passive components – Connector optical interfaces*

3 Terms and definitions

No terms and definitions are listed in this document.

4 Description

The LSHE connector family is intended to be used outdoor, in industrial and, more generally, in harsh environments. It is therefore designed to survive under harsh conditions, according to IEC 61753-1. A connection comprises a plug connector and a socket, each one containing an insert with up to four termini. Each terminus hosts a 2,5 mm (nominal) ferrule, which may be physical contact (PC) or angled PC (APC) polished. Within a connection, the ferrules are aligned through resilient sleeves housed in an adaptor that may be fixed either on the plug side or on the socket side (hermaphrodite connection system). Each terminus may support any type of fibre (SM, MM or other) provided the termini facing each other in the connection contain compatible fibres. The same applies to the polishing type (PC or APC) of the mating termini. Within one connector, different types of fibre and termini may be used. The mechanical connection between the plug connector and the socket is ensured by a push-pull mechanism.

5 Connector Interfaces

5.1 General

General requirements defined in IEC 61754-1 shall be applied for this document.

Documents
Document Sharing Hub

Full document details: IEC 61754-35-2020

This document contains the following standard interfaces:

- interface IEC 61754-35-1: four-way plug connector interface;
- interface IEC 61754-35-2: four-way socket connector interface.

The plugs and sockets shown in Table 1 are intermateable.

Table 1 – Intermateability between plugs and sockets within the IEC 61754-35 family

Plugs	Socket
-	61754-35-2
61754-35-1	mate

5.2 Plug connector interface

The isometric view of the plug connector interface with the protection cap open is shown in Figure 1. In this example, two of the four termini are equipped with adaptors.

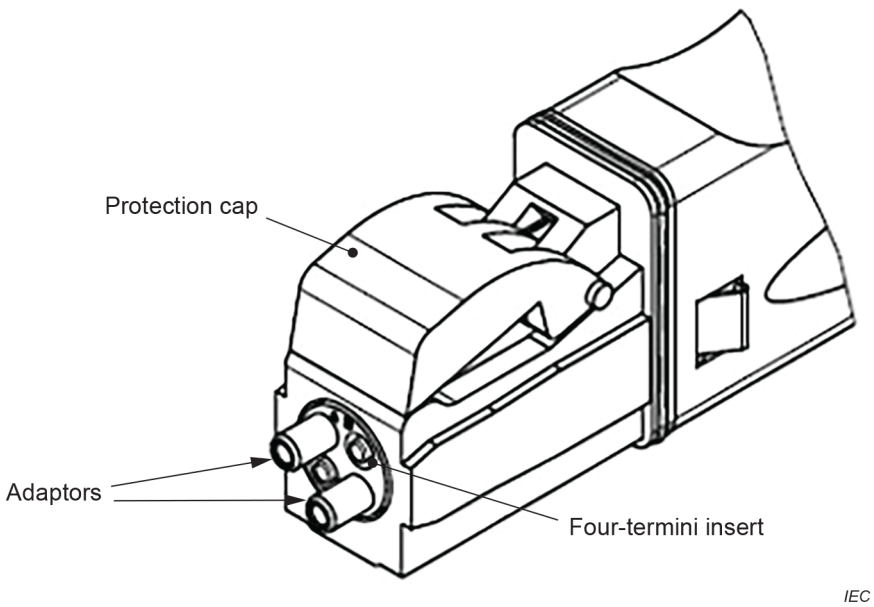

NOTE Two adaptors are displayed, and the protection cap is open.

Figure 1 – Plug connector interface (isometric view)

The side and front views of the plug connector are illustrated in Figure 2 while the orientation of the APC ferrule with respect to the connector is shown in Figure 3, where the optical reference plane is defined as the plane passing through the nominal fibre centre and parallel to the mechanical reference plane. The relevant dimensions are listed in Table 2.

Documents
Document Sharing Hub
Full document details: IEC 61754-35-2020

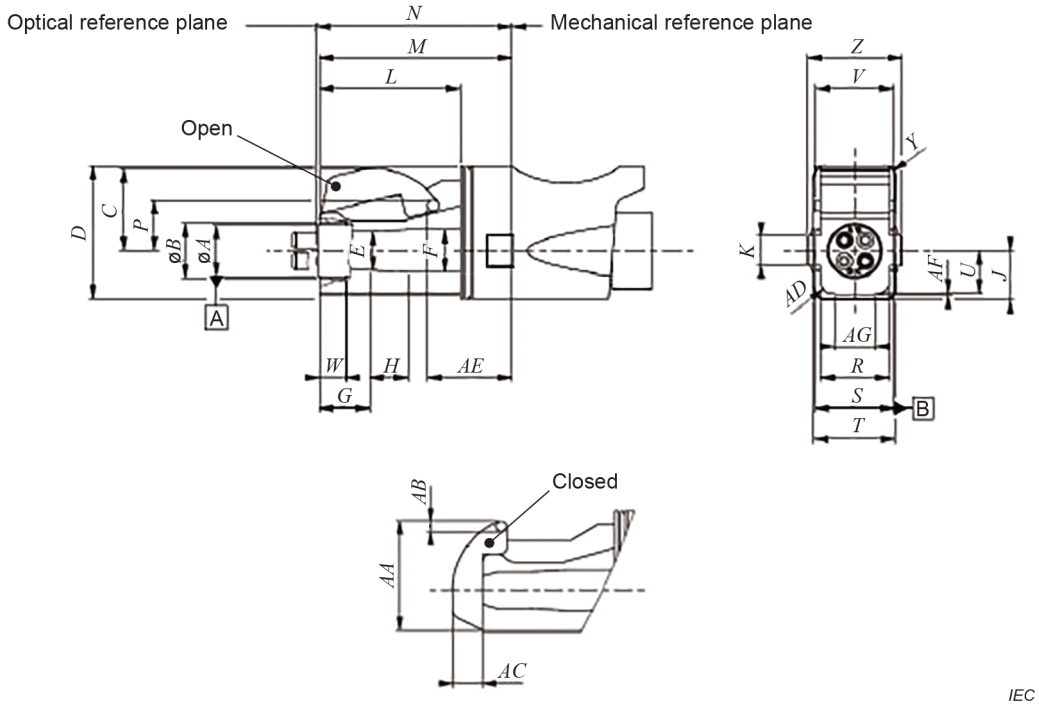

Figure 2 – Plug connector mating dimensions

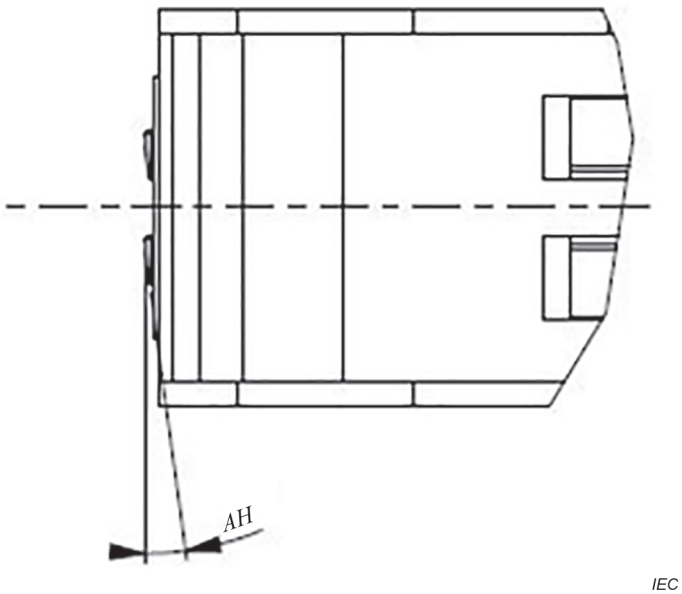

Figure 3 – Expanded view from direction A (APC type)

Documents
Document Sharing Hub
Full document details: IEC 61754-35-2020

Table 2 – Plug connector dimensions

Reference	Dimensions			Notes
	Minimum	Basic	Maximum	
A	13,28 mm		13,35 mm	Diameter
B	14,20 mm		14,50 mm	Diameter
C	21,20 mm		21,60 mm	
D [a]	34,45 mm		34,55 mm	
E	9,95 mm		10,15 mm	
F	10,95 mm		11,15 mm	
G	12,90 mm		13,40 mm	
H	9,80 mm		10,20 mm	
J [a]	12,40 mm		12,50 mm	
K	7,45 mm		7,55 mm	
L	36,40 mm		36,70 mm	
M	50,00 mm		50,25 mm	
N [b]	50,5 mm		50,9 mm	
P	12,75 mm		13,00 mm	
R	17,70 mm		17,80 mm	
S	19,9 mm		20,0 mm	
T [a]	20,5 mm		20,8 mm	
U	10,8 mm		11,0 mm	
V	19,20 mm		19,50 mm	
W	6 mm		-	
Y [a]	3 mm		3,1 mm	
Z	24,1 mm		-	
AA	29,8 mm		30,05 mm	
AB	2,82 mm		2,95 mm	
AC	7,9 mm		8,7 mm	
AD	2,9 mm		3,0 mm	
AE	21,5 mm		21,8 mm	
AF	0,1 mm		0,6 mm	
AG	10,4 mm		10,6 mm	
AH [c]		8°		Angle in degrees

[a] Material and dimensions compatible with application environment.

[b] Dimension *N* is given when plug connector is not mated and may change under axial compression forces onto the spring-loaded insert in a mating configuration.

[c] For APC ferrules only.

5.3 Plug connector interface

A cross section of the socket connector interface is shown in Figure 4 with an example of a possible configuration of the adaptors mounted on two of the four possible termini. The relevant dimensions and the relative orientation of the APC ferrules with respect to the socket are shown in Figure 5 and Figure 6, respectively. The socket's dimensions are listed in Table 3. For information about panel cutout dimensions, please see Annex A.

AVA Documents
Document Sharing Hub

Full document details: IEC 61754-35-2020

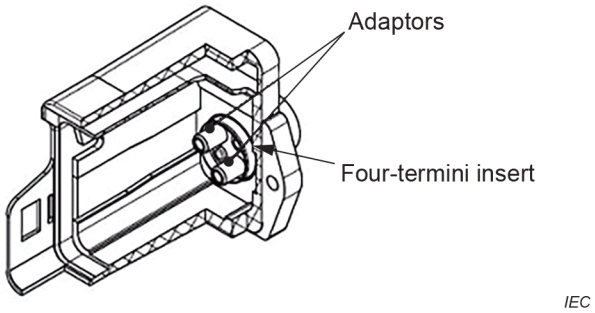

Figure 4 – Socket connector interface (isometric view)

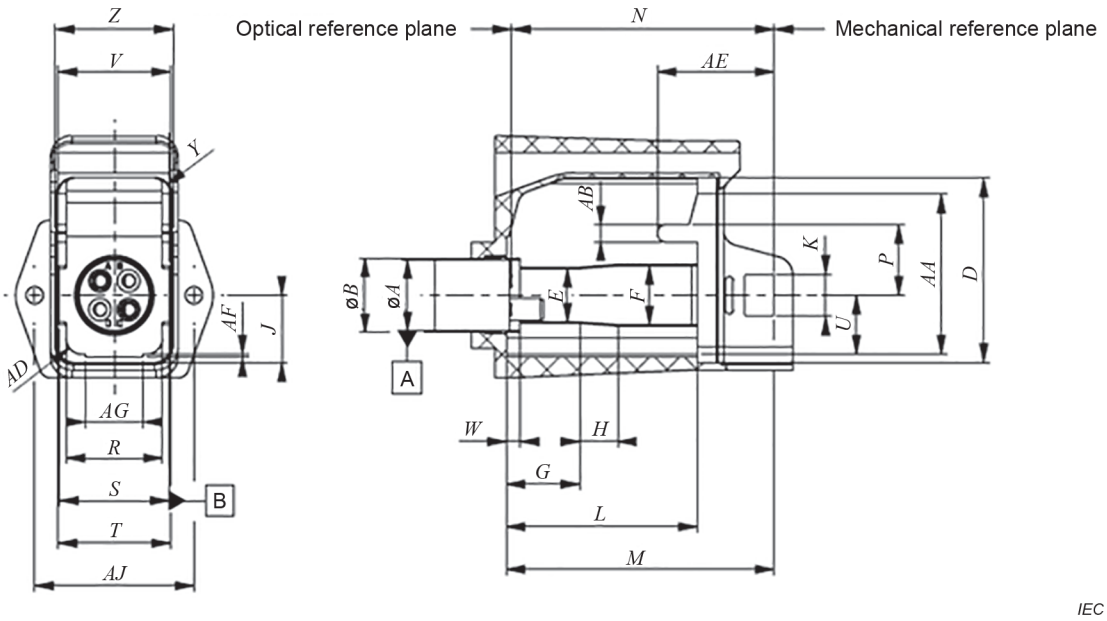

Figure 5 – Socket connector mating dimensions

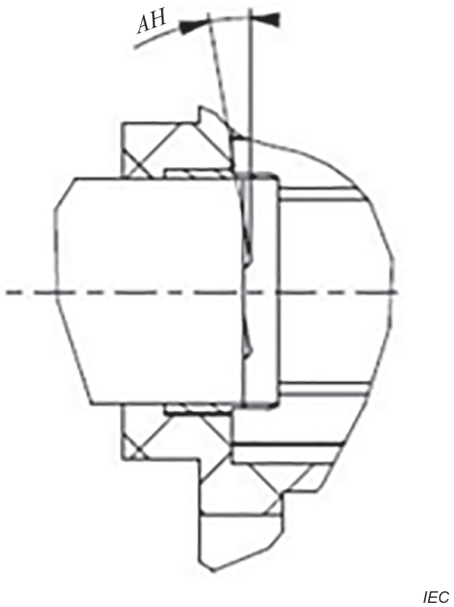

Figure 6 – Expanded view from direction A (APC type)

Documents
Document Sharing Hub
Full document details: IEC 61754-35-2020