IEC 61754-4-100

Edition 1.0 2015-11

INTERNATIONAL STANDARD

NORME INTERNATIONALE

Fibre optic interconnecting devices and passive components – Fibre optic connector interfaces –
Part 4-100: Type SC connector family – Simplified receptacle SC-PC connector interfaces

Dispositifs d'interconnexion et composants passifs à fibres optiques – Interfaces de connecteurs à fibres optiques –
Partie 4-100: Famille de connecteurs de type SC – Interfaces de connecteur SC-PC à embase simplifiée

IEC 61754-4-100:2015-11(en-fr)

Documents
Document Sharing Hub

Full document details: IEC 61754-4-100 2015

THIS PUBLICATION IS COPYRIGHT PROTECTED

Copyright © 2015 IEC, Geneva, Switzerland

All rights reserved. Unless otherwise specified, no part of this publication may be reproduced or utilized in any form or by any means, electronic or mechanical, including photocopying and microfilm, without permission in writing from either IEC or IEC's member National Committee in the country of the requester. If you have any questions about IEC copyright or have an enquiry about obtaining additional rights to this publication, please contact the address below or your local IEC member National Committee for further information.

Droits de reproduction réservés. Sauf indication contraire, aucune partie de cette publication ne peut être reproduite ni utilisée sous quelque forme que ce soit et par aucun procédé, électronique ou mécanique, y compris la photocopie et les microfilms, sans l'accord écrit de l'IEC ou du Comité national de l'IEC du pays du demandeur. Si vous avez des questions sur le copyright de l'IEC ou si vous désirez obtenir des droits supplémentaires sur cette publication, utilisez les coordonnées ci-après ou contactez le Comité national de l'IEC de votre pays de résidence.

IEC Central Office
3, rue de Varembé
CH-1211 Geneva 20
Switzerland

Tel.: +41 22 919 02 11
Fax: +41 22 919 03 00
info@iec.ch
www.iec.ch

About the IEC
The International Electrotechnical Commission (IEC) is the leading global organization that prepares and publishes International Standards for all electrical, electronic and related technologies.

About IEC publications
The technical content of IEC publications is kept under constant review by the IEC. Please make sure that you have the latest edition, a corrigenda or an amendment might have been published.

IEC Catalogue - webstore.iec.ch/catalogue
The stand-alone application for consulting the entire bibliographical information on IEC International Standards, Technical Specifications, Technical Reports and other documents. Available for PC, Mac OS, Android Tablets and iPad.

IEC publications search - www.iec.ch/searchpub
The advanced search enables to find IEC publications by a variety of criteria (reference number, text, technical committee,…). It also gives information on projects, replaced and withdrawn publications.

IEC Just Published - webstore.iec.ch/justpublished
Stay up to date on all new IEC publications. Just Published details all new publications released. Available online and also once a month by email.

Electropedia - www.electropedia.org
The world's leading online dictionary of electronic and electrical terms containing more than 30 000 terms and definitions in English and French, with equivalent terms in 15 additional languages. Also known as the International Electrotechnical Vocabulary (IEV) online.

IEC Glossary - std.iec.ch/glossary
More than 60 000 electrotechnical terminology entries in English and French extracted from the Terms and Definitions clause of IEC publications issued since 2002. Some entries have been collected from earlier publications of IEC TC 37, 77, 86 and CISPR.

IEC Customer Service Centre - webstore.iec.ch/csc
If you wish to give us your feedback on this publication or need further assistance, please contact the Customer Service Centre: csc@iec.ch.

A propos de l'IEC
La Commission Electrotechnique Internationale (IEC) est la première organisation mondiale qui élabore et publie des Normes internationales pour tout ce qui a trait à l'électricité, à l'électronique et aux technologies apparentées.

A propos des publications IEC
Le contenu technique des publications IEC est constamment revu. Veuillez vous assurer que vous possédez l'édition la plus récente, un corrigendum ou amendement peut avoir été publié.

Catalogue IEC - webstore.iec.ch/catalogue
Application autonome pour consulter tous les renseignements bibliographiques sur les Normes internationales, Spécifications techniques, Rapports techniques et autres documents de l'IEC. Disponible pour PC, Mac OS, tablettes Android et iPad.

Recherche de publications IEC - www.iec.ch/searchpub

La recherche avancée permet de trouver des publications IEC en utilisant différents critères (numéro de référence, texte, comité d'études,…). Elle donne aussi des informations sur les projets et les publications remplacées ou retirées.

IEC Just Published - webstore.iec.ch/justpublished

Restez informé sur les nouvelles publications IEC. Just Published détaille les nouvelles publications parues. Disponible en ligne et aussi une fois par mois par email.

Electropedia - www.electropedia.org

Le premier dictionnaire en ligne de termes électroniques et électriques. Il contient plus de 30 000 termes et définitions en anglais et en français, ainsi que les termes équivalents dans 15 langues additionnelles. Egalement appelé Vocabulaire Electrotechnique International (IEV) en ligne.

Glossaire IEC - std.iec.ch/glossary
Plus de 60 000 entrées terminologiques électrotechniques, en anglais et en français, extraites des articles Termes et Définitions des publications IEC parues depuis 2002. Plus certaines entrées antérieures extraites des publications des CE 37, 77, 86 et CISPR de l'IEC.

Service Clients - webstore.iec.ch/csc

Si vous désirez nous donner des commentaires sur cette publication ou si vous avez des questions contactez-nous: csc@iec.ch.

Documents
Document Sharing Hub

Full document details: IEC 61754-4-100 2015

IEC 61754-4-100

Edition 1.0 2015-11

INTERNATIONAL STANDARD

NORME INTERNATIONALE

Fibre optic interconnecting devices and passive components – Fibre optic connector interfaces – Part 4-100: Type SC connector family – Simplified receptacle SC-PC connector interfaces

Dispositifs d'interconnexion et composants passifs à fibres optiques – Interfaces de connecteurs à fibres optiques – Partie 4-100: Famille de connecteurs de type SC – Interfaces de connecteur SC-PC à embase simplifiée

INTERNATIONAL
ELECTROTECHNICAL
COMMISSION

COMMISSION
ELECTROTECHNIQUE
INTERNATIONALE

ICS 33.180.20

ISBN 978-2-8322-2992-7

Warning! Make sure that you obtained this publication from an authorized distributor.
Attention! Veuillez vous assurer que vous avez obtenu cette publication via un distributeur agréé.

® Registered trademark of the International Electrotechnical Commission
Marque déposée de la Commission Electrotechnique Internationale

AVA Documents
Document Sharing Hub

Full document details: IEC 61754-4-100 2015

CONTENTS

FOREWORD 3
1 Scope 5
2 Normative references 5
3 Description 5
4 Interfaces 6
4.1 General 6
4.2 Intermateability 6
4.3 Interfaces and dimensions 6
Annex A (informative) Example of an intermateable set including a simplified receptacle 12
Bibliography 13

Figure 1 – Simplified receptacle housing interface 7
Figure 2 – Pin gauge for adaptor 9
Figure 3 – Simplified plug interface 10
Figure A.1 – Example of an intermateable set including a simplified receptacle 12

Table 1 – Intermateability of the interface 6
Table 2 – Dimensions of the simplified receptacles housings interface 8
Table 3 – Grade of the simplified receptacles housings interface 8
Table 4 – Pin gauge dimensions 9
Table 5 – Dimensions of the simplified plug interface 11
Table 6 – Grade of the simplified plug interface 11

Documents
Document Sharing Hub

Full document details: IEC 61754-4-100 2015

INTERNATIONAL ELECTROTECHNICAL COMMISSION

FIBRE OPTIC INTERCONNECTING DEVICES AND PASSIVE COMPONENTS – FIBRE OPTIC CONNECTOR INTERFACES –

Part 4-100: Type SC connector family – Simplified receptacle SC-PC connector interfaces

FOREWORD

1) The International Electrotechnical Commission (IEC) is a worldwide organization for standardization comprising all national electrotechnical committees (IEC National Committees). The object of IEC is to promote international co-operation on all questions concerning standardization in the electrical and electronic fields. To this end and in addition to other activities, IEC publishes International Standards, Technical Specifications, Technical Reports, Publicly Available Specifications (PAS) and Guides (hereafter referred to as "IEC Publication(s)"). Their preparation is entrusted to technical committees; any IEC National Committee interested in the subject dealt with may participate in this preparatory work. International, governmental and non-governmental organizations liaising with the IEC also participate in this preparation. IEC collaborates closely with the International Organization for Standardization (ISO) in accordance with conditions determined by agreement between the two organizations.
2) The formal decisions or agreements of IEC on technical matters express, as nearly as possible, an international consensus of opinion on the relevant subjects since each technical committee has representation from all interested IEC National Committees.
3) IEC Publications have the form of recommendations for international use and are accepted by IEC National Committees in that sense. While all reasonable efforts are made to ensure that the technical content of IEC Publications is accurate, IEC cannot be held responsible for the way in which they are used or for any misinterpretation by any end user.
4) In order to promote international uniformity, IEC National Committees undertake to apply IEC Publications transparently to the maximum extent possible in their national and regional publications. Any divergence between any IEC Publication and the corresponding national or regional publication shall be clearly indicated in the latter.
5) IEC itself does not provide any attestation of conformity. Independent certification bodies provide conformity assessment services and, in some areas, access to IEC marks of conformity. IEC is not responsible for any services carried out by independent certification bodies.
6) All users should ensure that they have the latest edition of this publication.
7) No liability shall attach to IEC or its directors, employees, servants or agents including individual experts and members of its technical committees and IEC National Committees for any personal injury, property damage or other damage of any nature whatsoever, whether direct or indirect, or for costs (including legal fees) and expenses arising out of the publication, use of, or reliance upon, this IEC Publication or any other IEC Publications.
8) Attention is drawn to the Normative references cited in this publication. Use of the referenced publications is indispensable for the correct application of this publication.
9) Attention is drawn to the possibility that some of the elements of this IEC Publication may be the subject of patent rights. IEC shall not be held responsible for identifying any or all such patent rights.

International Standard IEC 61754-4-100 has been prepared by subcommittee SC86B: Fibre optic interconnecting devices and passive components, of IEC technical committee 86: Fibre optics.

This first edition of IEC 61754-4-100 cancels and replaces the first edition of IEC 61754-4-1 published in 2003. This edition constitutes a technical revision.

This edition includes the following significant technical changes with respect to the previous edition:

a) change in the standard number;
b) change in the interface number;
c) addition of an intermateability table;

AVA Documents Document Sharing Hub

Full document details: IEC 61754-4-100 2015

d) change in the pin gauge specification;

e) change in the specification of the ferrule outside diameter;

f) addition of multimode to the ferrule grade.

The text of this standard is based on the following documents:

FDIS	Report on voting
86B/3938/FDIS	86B/3959/RVD

Full information on the voting for the approval of this standard can be found in the report on voting indicated in the above table.

This publication has been drafted in accordance with the ISO/IEC Directives, Part 2.

A list of all parts in the IEC 61754 series, published under the general title *Fibre optic interconnecting devices and passive components – Fibre optic connector interfaces*, can be found on the IEC website.

Future standards in this series will carry the new general title as cited above. Titles of existing standards in this series will be updated at the time of the next edition.

The committee has decided that the contents of this publication will remain unchanged until the stability date indicated on the IEC website under "http://webstore.iec.ch" in the data related to the specific publication. At this date, the publication will be

- reconfirmed,
- withdrawn,
- replaced by a revised edition, or
- amended.

Documents
Document Sharing Hub

Full document details: IEC 61754-4-100 2015

FIBRE OPTIC INTERCONNECTING DEVICES AND PASSIVE COMPONENTS – FIBRE OPTIC CONNECTOR INTERFACES –

Part 4-100: Type SC connector family – Simplified receptacle SC-PC connector interfaces

1 Scope

This part of IEC 61754 specifies the standard simplified receptacle interface dimensions for the type SC connector family. The receptacle assembly consists of a simplified receptacle housing and a simplified plug.

2 Normative references

The following documents, in whole or in part, are normatively referenced in this document and are indispensable for its application. For dated references, only the edition cited applies. For undated references, the latest edition of the referenced document (including any amendments) applies.

IEC 61300-3-22, *Fibre optic interconnecting devices and passive components – Basic test and measurement procedures – Part 3-22: Examinations and measurements – Ferrule compression force*

IEC 61754-4:2013, *Fibre optic interconnecting devices and passive components –Fibre optic connector interfaces – Part 4:Type SC connector family*

IEC 61755-3-1, *Fibre optic connector optical interfaces – Part 3-1: Optical interface, 2,5 mm and 1,25 mm diameter cylindrical full zirconia PC ferrule, single mode fibre*

3 Description

The parent connector for the type SC connector family is a single-position plug which is characterized by a cylindrical, spring-loaded butting ferrule of 2,5 mm typical diameter, and a push-pull coupling mechanism.

a) The simplified receptacles are made up of simplified receptacle housings and simplified plugs.

b) The simplified receptacle housings are used to retain the connector plug and mechanically maintain the optical datum target of the plugs at a defined position within the simplified receptacle housings.

c) A spring is not included in the simplified plug.

d) The simplified plug is removed with the aid of a tool.

e) The optical alignment mechanism of the connector is of a resilient sleeve style.

f) The simplified receptacle housings are to be mated with the plug specified in IEC 61754-4:2013, Figure 1 which is the mating part of the simplified plug.

Documents
Document Sharing Hub

Full document details: IEC 61754-4-100 2015

4 Interfaces

4.1 General

This standard contains the following standard interfaces.

– Interface IEC 61754-4-100-1: simplified receptacles housings interface
– Interface IEC 61754-4-100-2: simplified plugs interface

The simplified plug has a ferrule with a spherical polished ferrule endface, and realizes physical contact (PC).

4.2 Intermateability

Table 1 shows the intermateability of the interface. The mating plugs shall employ the ferrule with the same polished endface shape. An example of an intermateable set is shown in Figure A.1.

Table 1 – Intermateability of the interface

Simplified receptacle housing interface	Plugs interfaces	
	IEC 61754-4-100-2	IEC 61754-4-1[a]
IEC 61754-4-100-1	Mate	Mate
[a] See IEC 61754-4:2013, Figure 1.		

4.3 Interfaces and dimensions

Figure 1 is an example of a simplified receptacle housing interface. Table 2 gives dimensions of the simplified receptacle housings interface. Table 3 gives the grade of the simplified receptacle housings interface.

Documents
Document Sharing Hub
Full document details: IEC 61754-4-100 2015

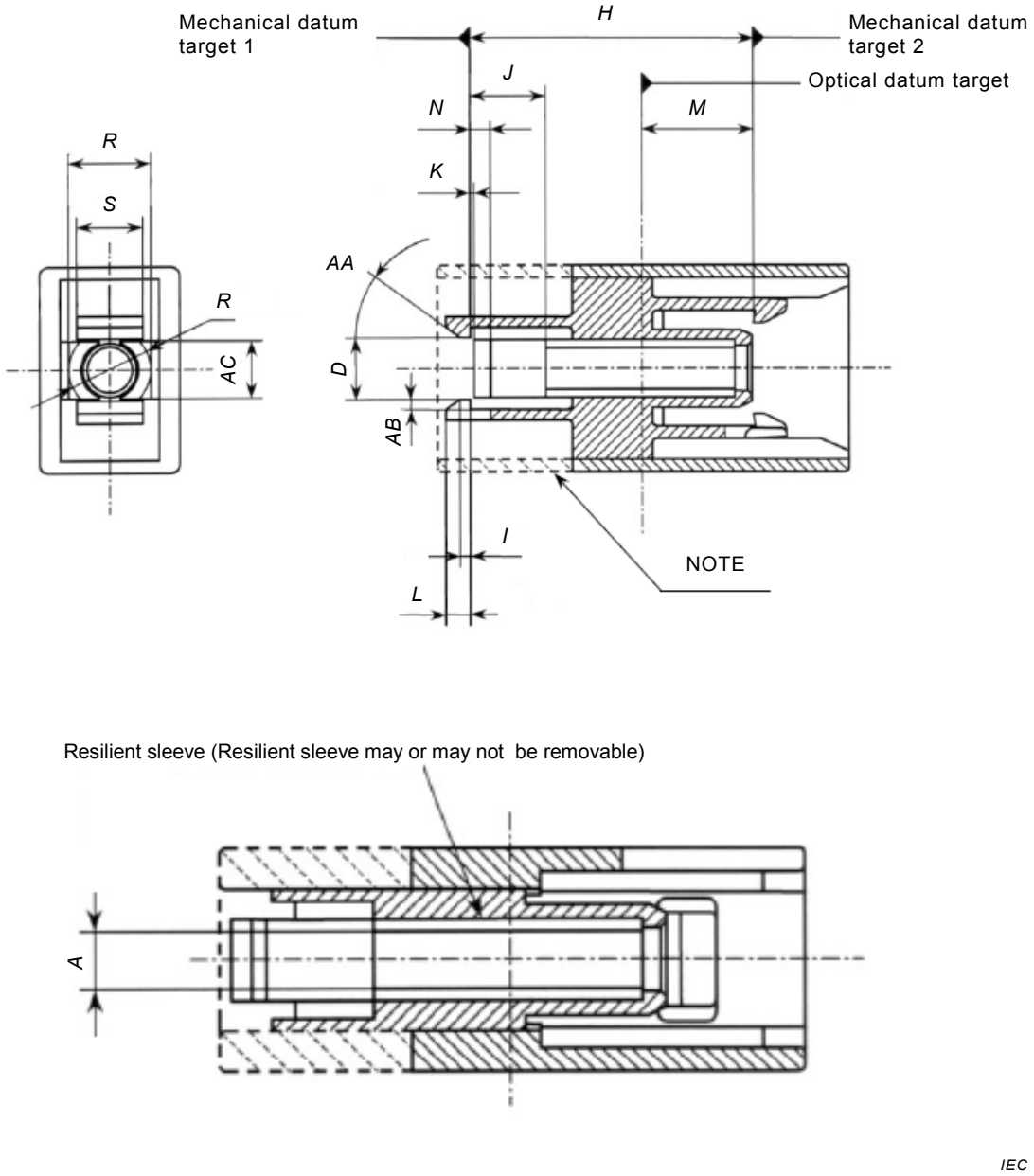

NOTE Structure shown in dotted line is optional.

Figure 1 – Simplified receptacle housing interface

Documents
Document Sharing Hub
Full document details: IEC 61754-4-100 2015