IEC 61754-6

Edition 3.0 2022-02
REDLINE VERSION

INTERNATIONAL STANDARD

colour inside

Fibre optic interconnecting devices and passive components – Fibre optic connector interfaces –
Part 6: Type MU connector family

IEC 61754-6:2022-02 RLV(en)

Documents
Document Sharing Hub

Full document details: IEC 61754-6 2022 RLV

THIS PUBLICATION IS COPYRIGHT PROTECTED
Copyright © 2022 IEC, Geneva, Switzerland

All rights reserved. Unless otherwise specified, no part of this publication may be reproduced or utilized in any form or by any means, electronic or mechanical, including photocopying and microfilm, without permission in writing from either IEC or IEC's member National Committee in the country of the requester. If you have any questions about IEC copyright or have an enquiry about obtaining additional rights to this publication, please contact the address below or your local IEC member National Committee for further information.

IEC Secretariat
3, rue de Varembé
CH-1211 Geneva 20
Switzerland

Tel.: +41 22 919 02 11
info@iec.ch
www.iec.ch

About the IEC
The International Electrotechnical Commission (IEC) is the leading global organization that prepares and publishes International Standards for all electrical, electronic and related technologies.

About IEC publications
The technical content of IEC publications is kept under constant review by the IEC. Please make sure that you have the latest edition, a corrigendum or an amendment might have been published.

IEC publications search - webstore.iec.ch/advsearchform
The advanced search enables to find IEC publications by a variety of criteria (reference number, text, technical committee, …). It also gives information on projects, replaced and withdrawn publications.

IEC Just Published - webstore.iec.ch/justpublished
Stay up to date on all new IEC publications. Just Published details all new publications released. Available online and once a month by email.

IEC Customer Service Centre - webstore.iec.ch/csc
If you wish to give us your feedback on this publication or need further assistance, please contact the Customer Service Centre: sales@iec.ch.

IEC Products & Services Portal - products.iec.ch
Discover our powerful search engine and read freely all the publications previews. With a subscription you will always have access to up to date content tailored to your needs.

Electropedia - www.electropedia.org
The world's leading online dictionary on electrotechnology, containing more than 22 300 terminological entries in English and French, with equivalent terms in 19 additional languages. Also known as the International Electrotechnical Vocabulary (IEV) online.

Documents
Document Sharing Hub

Full document details: IEC 61754-6 2022 RLV

IEC 61754-6

Edition 3.0 2022-02
REDLINE VERSION

INTERNATIONAL STANDARD

colour inside

Fibre optic interconnecting devices and passive components – Fibre optic connector interfaces –
Part 6: Type MU connector family

INTERNATIONAL
ELECTROTECHNICAL
COMMISSION

ICS 33.180.20

ISBN 978-2-8322-1085-5

Warning! Make sure that you obtained this publication from an authorized distributor.

® Registered trademark of the International Electrotechnical Commission

Documents
Document Sharing Hub

Full document details: IEC 61754-6 2022 RLV

CONTENTS

FOREWORD 5
1 Scope 7
2 Normative references 7
3 Terms and definitions 7
4 Description 7
5 Interfaces 8
Annex A (informative) Configuration of type MU-A connector set 77
Annex B (informative) Configuration of type MU-B connector set 78
Annex C (informative) Floating 2-port connector plug 79
Annex D (informative) Panel dimensions 80
D.1 General 80
D.2 Simplex adaptor 80
D.3 4,5 mm duplex adaptor 80
D.4 6,25 mm duplex adaptor 81
D.5 Horizontal duplex adaptor 81
D.6 4,5 mm 8-port adaptor 82
Bibliography 83

Figure 1 – Simplex plug connector interface – Push/pull 11
Figure 2 – 4,5 mm duplex plug connector interface – Push/pull 14
Figure 3 – Simplex adaptor connector interface – Push/pull 17
Figure 4 – Pin gauge for resilient alignment sleeve 19
Figure 5 – 4,5 mm duplex adaptor connector interface – Push/pull 20
Figure 6 – 8-port adaptor connector interface – Push/pull 23
Figure 7 – Plug connector interface – For printed board housings 25
Figure 8 – Sleeve holder interface 27
Figure 9 – 2-port backplane housing interface 29
Figure 10 – 2-port printed board housing interface 33
Figure 11 – 8-port backplane housing interface 37
Figure 12 – 8-port printed board housing interface 41
Figure 13 – Simplex active device receptacle interface 45
Figure 14 – Detail of the mechanical stop for rigid bore alignment feature 47
Figure 15 – 4,5 mm duplex active device receptacle interface 48
Figure 16 – Detail of the mechanical stop for rigid bore alignment feature 50
Figure 17 – 6,25 mm duplex active device receptacle interface 51
Figure 18 – Detail of the mechanical stop for rigid bore alignment feature 53
Figure 19 – Plug connector interface – For printed board housings, APC 54
Figure 20 – Simplex plug connector interface – Push/pull, APC 57
Figure 21 – 4,5 mm duplex plug connector interface – Push/pull, APC 60
Figure 22 – 6,25 mm duplex plug connector interface – Push/pull, APC 63
Figure 23 – 6,25 mm duplex plug connector interface – Push/pull 66
Figure 24 – 6,25 mm duplex adaptor connector interface 69

AVA Documents
Document Sharing Hub

Full document details: IEC 61754-6 2022 RLV

Figure 25 – Horizontal duplex plug connector interface – Push/pull 71
Figure 26 – Horizontal duplex adaptor connector interface 74
Figure A.1 – Configuration of type MU-A connector set 77
Figure B.1 – Configuration of type MU-B connector set 78
Figure C.1 – Floating 2-port connector plug 79
Figure D.1 – Panel cut out 80
Figure D.2 – Panel cut out 80
Figure D.3 – Panel cut out 81
Figure D.4 – Panel cut out 81
Figure D.5 – Panel cut out 82

Table 1 – Interfaces 8
Table 2 – Intermateability of MU-A connectors ~~set~~ 9
Table 3 – Intermateability of MU-B connectors ~~set~~ 9
Table 4 – Intermateability of MU receptacles 10
Table 5 – Dimensions of the simplex plug connector interface 12
Table 6 – Grade of the simplex plug connector 13
Table 7 – Dimensions of the 4,5 mm duplex plug connector interface 14
Table 8 – Grade of the 4,5 mm duplex plug connector 16
Table 9 – Dimensions of the simplex adaptor connector interface 18
Table 10 – Grade of the simplex adaptor connector 19
Table 11 – Pin gauge dimensions 19
Table 12 – Dimensions of the 4,5 mm duplex adaptor connector interface 21
Table 13 – Grade of the 4,5 mm duplex adaptor connector 22
Table 14 – Dimensions of the 8-port adaptor connector interface 24
Table 15 – Grade of the 8-port adaptor connector 25
Table 16 – Dimensions of the plug connector interface 26
Table 17 – Grade of the plug connector 27
Table 18 – Dimensions of the sleeve holder interface 28
Table 19 – Grade of the sleeve holder 28
Table 20 – Dimensions of the 2-port backplane housing interface 31
Table 21 – Grade of the 2-port backplane housing 32
Table 22 – Dimensions of the 2-port printed board housing interface 35
Table 23 – Dimensions of the 8-port backplane housing interface 39
Table 24 – Grade of the 8-port backplane housing 40
Table 25 – Dimensions of the 8-port printed board housing interface 43
Table 26 – Dimensions of the simplex active device receptacle interface 46
Table 27 – Alignment feature grade 47
Table 28 – Dimensions of the mechanical stop for rigid bore alignment feature 47
Table 29 – Mechanical stop feature grade 48
Table 30 – Dimensions of the 4,5 mm duplex active device receptacle interface 49
Table 31 – Alignment feature grade 50
Table 32 – Dimensions of the mechanical stop for rigid bore alignment feature 50

AVA Documents
Document Sharing Hub
Full document details: IEC 61754-6 2022 RLV

Table 33 – Mechanical stop feature grade 51
Table 34 – Dimensions of the 6,25 mm duplex active device receptacle interface 52
Table 35 – Alignment feature grade 53
Table 36 – Dimensions of the mechanical stop for rigid bore alignment feature 53
Table 37 – Mechanical stop feature grade 54
Table 38 – Dimensions of the plug connector interface – For printed board housings, APC 56
Table 39 – Dimensions of the simplex plug connector interfaces, APC 58
Table 40 – Dimensions of the 4,5 mm duplex plug connector interfaces, APC 61
Table 41 – Dimensions of the 6,25 mm duplex plug connector interface, APC 64
Table 42 – Dimensions of the 6,25 mm duplex plug connector interface 66
Table 43 – Grade 68
Table 44 – Dimensions of the 6,25 mm duplex adaptor connector interface 69
Table 45 – Grade of the 6,25 mm duplex adaptor connector 70
Table 46 – Dimensions of the horizontal duplex plug connector interface 72
Table 47 – Grade of the horizontal duplex plug connector 73
Table 48 – Dimensions of the horizontal duplex adaptor connector interface 75
Table 49 – Grade of the horizontal duplex adaptor connector 76
Table C.1 – Dimensions table for 2-port connector plug 79
Table D.1 – Dimensions for simplex adaptor 80
Table D.2 – Dimensions for 4,5 mm duplex adaptor 81
Table D.3 – Dimensions for 6,25 mm duplex adaptor 81
Table D.4 – Dimensions for horizontal duplex adaptor 82
Table D.5 – Dimensions for 4,5 mm 8-port adaptor 82

Documents
Document Sharing Hub
Full document details: IEC 61754-6 2022 RLV

INTERNATIONAL ELECTROTECHNICAL COMMISSION

FIBRE OPTIC INTERCONNECTING DEVICES AND PASSIVE COMPONENTS – FIBRE OPTIC CONNECTOR INTERFACES –

Part 6: Type MU connector family

FOREWORD

1) The International Electrotechnical Commission (IEC) is a worldwide organization for standardization comprising all national electrotechnical committees (IEC National Committees). The object of IEC is to promote international co-operation on all questions concerning standardization in the electrical and electronic fields. To this end and in addition to other activities, IEC publishes International Standards, Technical Specifications, Technical Reports, Publicly Available Specifications (PAS) and Guides (hereafter referred to as "IEC Publication(s)"). Their preparation is entrusted to technical committees; any IEC National Committee interested in the subject dealt with may participate in this preparatory work. International, governmental and non-governmental organizations liaising with the IEC also participate in this preparation. IEC collaborates closely with the International Organization for Standardization (ISO) in accordance with conditions determined by agreement between the two organizations.
2) The formal decisions or agreements of IEC on technical matters express, as nearly as possible, an international consensus of opinion on the relevant subjects since each technical committee has representation from all interested IEC National Committees.
3) IEC Publications have the form of recommendations for international use and are accepted by IEC National Committees in that sense. While all reasonable efforts are made to ensure that the technical content of IEC Publications is accurate, IEC cannot be held responsible for the way in which they are used or for any misinterpretation by any end user.
4) In order to promote international uniformity, IEC National Committees undertake to apply IEC Publications transparently to the maximum extent possible in their national and regional publications. Any divergence between any IEC Publication and the corresponding national or regional publication shall be clearly indicated in the latter.
5) IEC itself does not provide any attestation of conformity. Independent certification bodies provide conformity assessment services and, in some areas, access to IEC marks of conformity. IEC is not responsible for any services carried out by independent certification bodies.
6) All users should ensure that they have the latest edition of this publication.
7) No liability shall attach to IEC or its directors, employees, servants or agents including individual experts and members of its technical committees and IEC National Committees for any personal injury, property damage or other damage of any nature whatsoever, whether direct or indirect, or for costs (including legal fees) and expenses arising out of the publication, use of, or reliance upon, this IEC Publication or any other IEC Publications.
8) Attention is drawn to the Normative references cited in this publication. Use of the referenced publications is indispensable for the correct application of this publication.
9) Attention is drawn to the possibility that some of the elements of this IEC Publication may be the subject of patent rights. IEC shall not be held responsible for identifying any or all such patent rights.

This redline version of the official IEC Standard allows the user to identify the changes made to the previous edition IEC 61754-6:2013. A vertical bar appears in the margin wherever a change has been made. Additions are in green text, deletions are in strikethrough red text.

Documents
Document Sharing Hub

Full document details: IEC 61754-6 2022 RLV

IEC 61754-6 has been prepared by subcommittee 86B: Fibre optic interconnecting devices and passive components, of IEC technical committee 86: Fibre optics. It is an International Standard.

This third edition cancels and replaces the second edition published in 2013 and constitutes a technical revision.

This edition includes the following significant technical changes with respect to the previous edition:

a) the test method IEC 61300-3-22 for the compression force of the ferrule was added;
b) Annex D (informative) with cut out dimension requirements for testing the strength of mounted adaptors was added.

The text of this International Standard is based on the following documents:

Draft	Report on voting
86B/4562/FDIS	86B/4585/RVD

Full information on the voting for its approval can be found in the report on voting indicated in the above table.

The language used for the development of this International Standard is English.

This document was drafted in accordance with ISO/IEC Directives, Part 2, and developed in accordance with ISO/IEC Directives, Part 1 and ISO/IEC Directives, IEC Supplement, available at www.iec.ch/members_experts/refdocs. The main document types developed by IEC are described in greater detail at www.iec.ch/standardsdev/publications.

A list of all parts of the IEC 61754 series, under the general title *Fibre optic interconnecting devices and passive components – Fibre optic connector interfaces,* can be found on the IEC website.

Future standards in this series will carry the new general title as cited above. Titles of existing standards in this series will be updated at the time of the next edition.

The committee has decided that the contents of this document will remain unchanged until the stability date indicated on the IEC website under webstore.iec.ch in the data related to the specific document. At this date, the document will be

- reconfirmed,
- withdrawn,
- replaced by a revised edition, or
- amended.

IMPORTANT – The 'colour inside' logo on the cover page of this publication indicates that it contains colours which are considered to be useful for the correct understanding of its contents. Users should therefore print this document using a colour printer.

Documents
Document Sharing Hub

Full document details: IEC 61754-6 2022 RLV

FIBRE OPTIC INTERCONNECTING DEVICES AND PASSIVE COMPONENTS – FIBRE OPTIC CONNECTOR INTERFACES –

Part 6: Type MU connector family

1 Scope

This part of IEC 61754 ~~defines~~ specifies the standard interface dimensions for type MU family of connectors.

2 Normative references

The following documents are referred to in the text in such a way that some or all of their content constitutes requirements of this document. For dated references, only the edition cited applies. For undated references, the latest edition of the referenced document (including any amendments) applies.

~~IEC 61755-3-1, *Fibre optic connector optical interfaces – Part 3-1:Optical interface, 2,5 mm and 1,25 mm diameter cylindrical full zirconia PC ferrule, single mode fibre*~~

~~IEC 61755-3-2, *Fibre optic connector optical interfaces – Part 3-2: Optical interface, 2,5 mm and 1,25 mm diameter cylindrical full zirconia ferrules for 8 degrees angled-PC single mode fibres*~~

IEC 61300-3-22, *Fibre optic interconnecting devices and passive components – Basic test and measurement procedures – Part 3-22: Examinations and measurements – Ferrule compression force*

IEC 61754-1, *Fibre optic interconnecting devices and passive components – Fibre optic connector interfaces – Part 1: General and guidance*

3 Terms and definitions

For the purposes of this document, the terms and definitions given in IEC 61754-1 apply.

ISO and IEC maintain terminological databases for use in standardization at the following addresses:

- IEC Electropedia: available at http://www.electropedia.org/
- ISO Online browsing platform: available at http://www.iso.org/obp

4 Description

The parent connector for type MU connector family is a miniature single-position plug which is characterized by a cylindrical, spring-loaded butting ferrule(s) of a 1,25 mm typical diameter, and a push-pull coupling mechanism. The optical alignment mechanism of the connectors is of a rigid hole or a resilient sleeve style.

This document type MU connector family defines the standard interface dimensions of active device receptacles for the type MU connectors. The receptacles are used to retain the connector

AVA Documents
Document Sharing Hub

plugs and mechanically maintain the optical datum target of the plugs at a defined position within the receptacle housings.

5 Interfaces

This document contains the standard interfaces showed in Table 1.

Table 1 – Interfaces

Interface IEC 61754-6-1	Simplex plug connector interface – Push/pull (see Figure 1)
Interface IEC 61754-6-2	4,5 mm duplex plug connector interface – Push/pull (see Figure 2)
Interface IEC 61754-6-3	Simplex adaptor connector interface – Push/pull (see Figure 3)
Interface IEC 61754-6-4	4,5 mm duplex adaptor connector interface – Push/pull (see Figure 5)
Interface IEC 61754-6-5	8-port adaptor connector interface – Push/pull (see Figure 6)
Interface IEC 61754-6-6	Plug connector interface – for printed board housings (see Figure 7)
Interface IEC 61754-6-7	Sleeve holder interface – for printed board housings (see Figure 8)
Interface IEC 61754-6-8	2-port backplane housing interface – Self-retentive (see Figure 9)
Interface IEC 61754-6-9	2-port printed board housing interface – Self-retentive (see Figure 10)
Interface IEC 61754-6-10	8-port backplane housing interface – Self-retentive (see Figure 11)
Interface IEC 61754-6-1~~1~~	8-port printed board housing interface – Self-retentive (see Figure 12)
Interface IEC 61754-6-12	Simplex active device receptacle interface – for physical contact (PC) connector plug (see Figure 13)
Interface IEC 61754-6-13	4,5 mm duplex active device receptacle interface – for PC connector plug (see Figure 15)
Interface IEC 61754-6-14	6,25 mm duplex active device receptacle interface – for PC connector plug (see Figure 17)
Interface IEC 61754-6-15	Plug connector interface – for printed board housings, angled PC (APC) 8 degrees (see Figure 19)
Interface IEC 61754-6-16	Simplex plug connector interface – Push/pull, APC 8 degrees (see Figure 20)
Interface IEC 61754-6-17	4,5 mm duplex plug connector interface – Push/pull, APC 8 degrees (see Figure 21)
Interface IEC 61754-6-18	6,25 mm duplex plug connector interface – Push/pull, APC 8 degrees (see Figure 22)
Interface IEC 61754-6-19	6,25 mm duplex plug connector interface – Push/pull (see Figure 23)
Interface IEC 61754-6-20	6,25 mm duplex adaptor connector interface – Push/pull (see Figure 24)
Interface IEC 61754-6-21	Horizontal duplex plug connector interface – Push/pull (see Figure 25)
Interface IEC 61754-6-22	Horizontal duplex adaptor connector interface – Push/pull (see Figure 26)

The plugs of interfaces IEC 61754-6-1, IEC 61754-6-2, IEC 61754-6-6, IEC 61754-6-19 and IEC 61754-6-21 have a ferrule(s) with a spherically polished endface, and realize physical contact (PC). The plugs of interfaces IEC 61754-6-15, IEC 61754-6-16, IEC 61754-6-17 and IEC 61754-6-18 have a ferrule(s) with a spherically polished angled endface and realize angled PC (APC).

The type MU connector family comprises two types of connector set: MU-A connector set (see Annex A) and MU-B connector set (see Annex B). The MU-A connector set is a plug/adaptor configuration with a push-pull coupling mechanism. The MU-B connector set is a plug-in type back-plane connector configuration which is plug/backplane and printed board housings/plug for printed board housing/sleeve holder configuration and is equipped with a self-retentive mechanism.

Documents
Document Sharing Hub
Full document details: IEC 61754-6 2022 RLV

The type MU-A connector set consists of simplex and duplex plugs, and simplex, duplex and 8-port adaptors. The plugs are common to the backplane connector housings of the type MU-B connector set.

The type MU-B connector set consists of 2-port and 8-port backplane and printed board connector housings, simplex and duplex plugs, plug for printed board connector housings, and sleeve holder. The plug for printed board connector housing is used as a jack together with the sleeve holder. The jack is attached into the printed board connector housing.

Table 2, Table 3 and Table 4 show the intermateablitiy of the standard interfaces. It shall be noted however that in order to obtain the designated optical performance, any plug shall be connected to a counterpart plug whose ferrule end is polished to the same condition.

Table 2 – Intermateability of MU-A connectors ~~set~~

Plugs	Adaptors				
	61754-6-3	61754-6-4	61754-6-5	61754-6-20	61754- 6-22
61754-6-1	Mate	Mate	Mate	Mate	Mate
61754-6-2	Not mate	Mate	Mate	Not mate	Not mate
61754-6-16	Mate	Mate	Mate	Mate	Mate
61754- 6-17	Not mate	Mate	Mate	Not mate	Not mate
61754-6-18	Not mate	Not mate	Not mate	Mate	Not mate
61754-6-19	Not mate	Not mate	Not mate	Mate	Not mate
61754-6-21	Not mate	Not mate	Not mate	Not mate	Mate

Table 3 – Intermateability of MU-B connectors ~~set~~

Plugs	Connector housings			
	Backplane connector housing		Printed board connector housing	
	61754-6-8	61754-6-10	61754-6-9	61754-6-11
61754-6-1	Mate	Mate	Not mate	Not mate
61754-6-2	Mate	Mate	Not mate	Not mate
61754-6-6 with 61754-6-7	Not mate	Not mate	Mate	Mate
61754-6-15 with 61754- 6-7	Not mate	Not mate	Mate	Mate
61754-6-16	Mate	Mate	Not mate	Not mate
61754-6-17	Mate	Mate	Not mate	Not mate
61754-6-18	Not mate	Not mate	Not mate	Not mate
61754-6-19	Not mate	Not mate	Not mate	Not mate
61754-6-21	Not mate	Not mate	Not mate	Not mate

Documents
Document Sharing Hub
Full document details: IEC 61754-6 2022 RLV

Table 4 – Intermateability of MU receptacles

Plugs	Receptacles		
	61754-6-12	**61754-6-13**	**61754-6-14**
61754-6-1	Mate	Mate	Mate
61754-6-2	Not mate	Mate	Not mate
61754-6-16	Not mate	Not mate	Not mate
61754-6-17	Not mate	Not mate	Not mate
61754-6-18	Not mate	Not mate	Not mate
61754-6-19	Not mate	Not mate	Mate
61754-6-21	Not mate	Not mate	Not mate

Figure 1 is an example of a simplex plug connector interface. Table 5 gives dimensions of the simplex plug connector interface and Table 6 gives the grade of the simplex plug connector interface.

Documents
Document Sharing Hub
Full document details: IEC 61754-6 2022 RLV

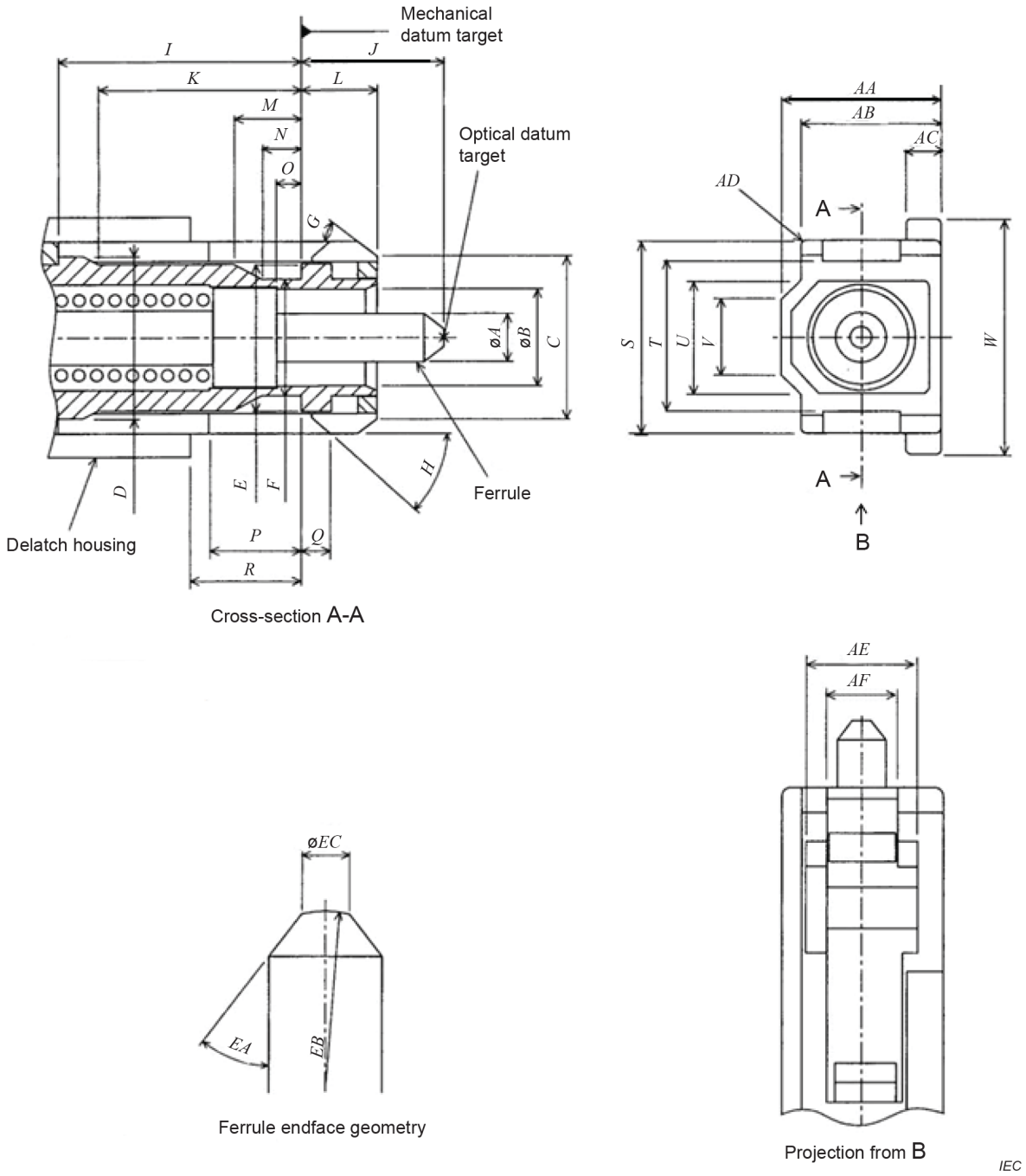

Figure 1 – Simplex plug connector interface – Push/pull

Documents
Document Sharing Hub
Full document details: IEC 61754-6 2022 RLV

Table 5 – Dimensions of the simplex plug connector interface

Reference	Dimensions		Remarks
	Minimum	Maximum	
A	See Table 6	~~1,249 5 mm~~	[a]
B	2,6 mm	2,7 mm	
C	4,6 mm	4,8 mm	
D	4,65 mm	4,75 mm	
E	4,3 mm	4,4 mm	
F	3,3 mm	3,4 mm	
G	25°	35°	Angle, unit in degrees
H	25°	35°	Angle, unit in degrees
I	6,55 mm	–	[b]
J	4,2 mm	4,5 mm	[c]
K	5,5 mm	–	
L	2,4 mm	2,5 mm	
M	1,5 mm	–	
N	0,6 mm	–	
O	0,5 mm	–	
P	2,6 mm	–	[b]
Q	1 mm	1,1 mm	[b d]
R	2,65 mm	2,9 mm	[b]
S	5,5 mm	5,6 mm	
T	4,3 mm	4,5 mm	
U	–	3,7 mm	
V	–	2,4 mm	
W	6,5 mm	6,6 mm	
AA	4,3 mm	4,4 mm	
AB	3,85 mm	3,95 mm	
AC	0,7 mm	0,9 mm	
AD	0,2 mm	–	Radius
AE	3 mm	–	
AF	2,2 mm	2,3 mm	
EA	32,5°	45°	Angle, unit in degrees [e]
EB	5 mm	30 mm	Radius [f]
EC	0,45 mm	0,73 mm	Diameter

[a] A chamfer or radius is allowed to a maximum depth of 0,5 mm from the ferrule endface.

[b] The delatch housing shall be movable to the right ~~and~~ or left ~~directions~~. Dimensions *L*, *M* and *V* are given when the ~~coupling sleeve is moved in its most right-direction position~~ delatch housing is at the furthest right.

[c] Dimension *J* is given for the plug endface when not mated. ~~It is noticed that~~ The ferrule is movable by a certain axial compression force with direct contacting endfaces, and therefore dimension *J* is variable. Ferrule compression force shall be 5,5 N to 6,5 N when the position of the optical datum target from the mechanical datum target is moved in the range of 3,9 mm to 4,1 mm. In addition, dimension *J* shall become less than 3,25 mm with a relatively large axial compression force. The compression force shall be measured according to IEC 61300-3-22.

[d] ~~The right-side position of *Q* shall become the left-side position to the mechanical datum target when the coupling sleeve is moved to its most left-direction position.~~ *Q* is to the right of the mechanical datum target when the delatch housing is to the right (connected state) and to the left of the mechanical datum target when the delatch housing is to the left (disconnected state).

[e] 40° to 45° are desirable to minimize debris for backplane connectors.

[f] Dome eccentricity of the spherically polished ferrule endface shall be less than ~~70~~ 50 µm.

AVA Documents Document Sharing Hub

Table 6 – Grade of the simplex plug connector

Grade	Dimensions mm		Remarks
	A		
	Minimum	Maximum	
A	See IEC 61755-3-1		a
B	See IEC 61755-3-1		a
C	See IEC 61755-3-1		a
D	See IEC 61755-3-1		a
~~Am~~	~~1,248 3~~	~~1,249 5~~	~~b~~
~~Bm~~	~~1.246 7~~	~~1,249 5~~	~~b~~
A_m	Grade not specified at this time		a b
B_m	1,246 7	1,249 5	a b
C_m	Grade not specified at this time		a b

a ~~See IEC 61755-3-1.~~ Add grade number to the interface reference number.

b See IEC 61755-6-1[1] for guidance.

Figure 2 is an example of a 4,5 mm duplex plug connector interface. Table 7 gives dimensions of the 4,5 mm duplex plug connector interface and Table 8 gives the grade of the 4,5 mm duplex plug connector interface.

[1] Under preparation. Stage at the time of publication: IEC/CDM 61755-6-1:2021.

Documents
Document Sharing Hub

Full document details: IEC 61754-6 2022 RLV

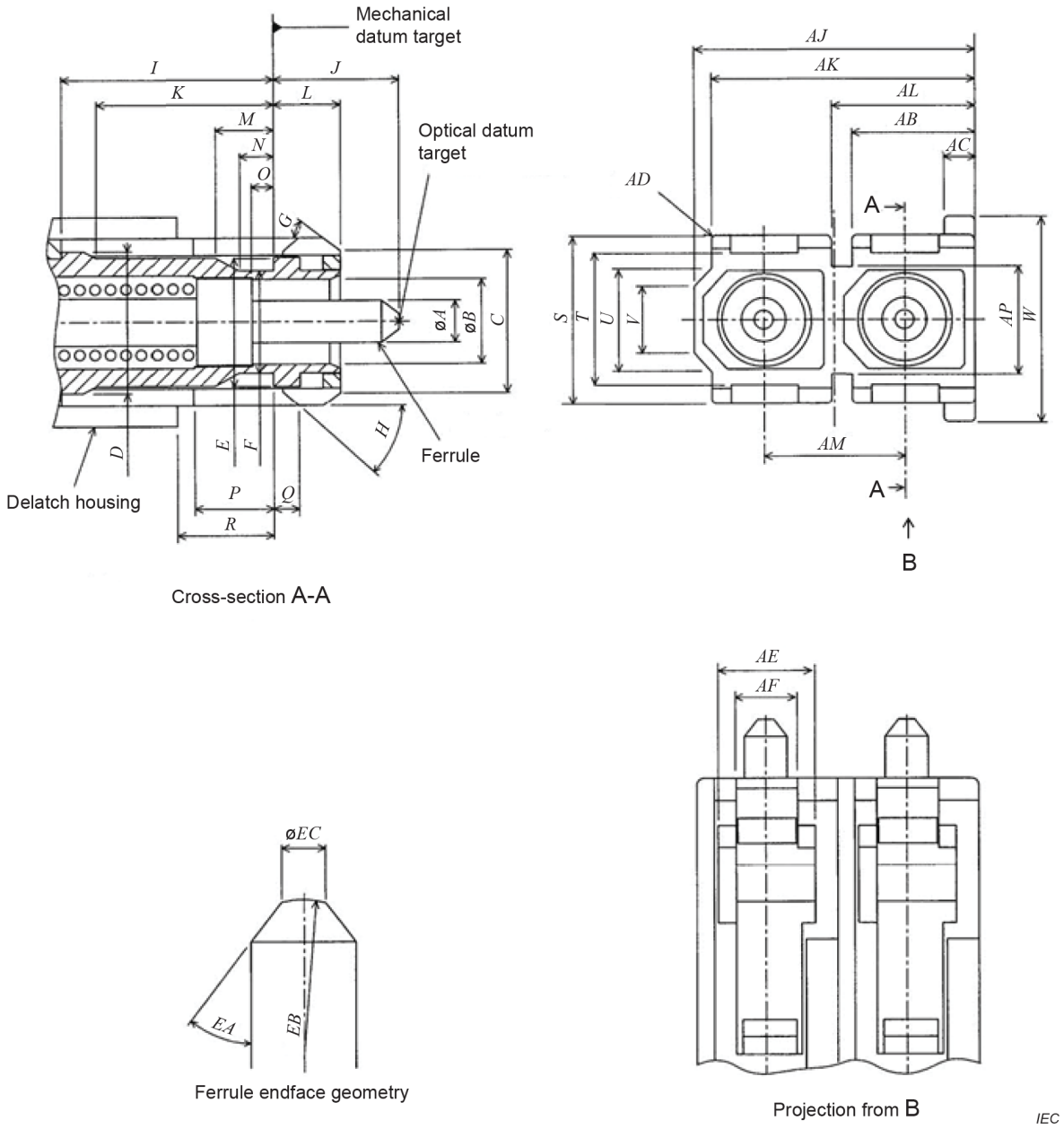

Figure 2 – 4,5 mm duplex plug connector interface – Push/pull

Table 7 – Dimensions of the 4,5 mm duplex plug connector interface

Reference	Dimensions		Remarks
	Minimum	Maximum	
A	See Table 8	~~1,249 5 mm~~	a
B	2,6 mm	2,7 mm	
C	4,6 mm	4,8 mm	
D	4,65 mm	4,75 mm	
E	4,3 mm	4,4 mm	
F	3,3 mm	3,4 mm	
G	25°	35°	Angle, unit in degrees
H	25°	35°	Angle, unit in degrees
I	6,55 mm	–	b

AVA Documents Document Sharing Hub
Full document details: IEC 61754-6 2022 RLV

J	4,2 mm	4,5 mm	c
K	5,5 mm	–	
L	2,4 mm	2,5 mm	
M	1,5 mm	–	
N	0,6 mm	–	
O	0,5 mm	–	
P	2,6 mm	–	b
Q	1,0 mm	1,1 mm	b d
R	2,65 mm	2,9 mm	b
S	5,5 mm	5,6 mm	
T	4,3 mm	4,5 mm	
U	–	3,7 mm	
V	–	2,4 mm	
W	6,5 mm	6,6 mm	
AB	3,7 mm	3,85 mm	
AC	0,7 mm	0,9 mm	
AD	0,2 mm	–	Radius
AE	3,0 mm	–	
AF	2,2 mm	2,3 mm	
AJ	8,8 mm	8,9 mm	
AK	8,35 mm	8,45 mm	
AL	4,55 mm	4,7 mm	
AM	4,45 mm	4,55 mm	
AP	–	3,7 mm	
EA	32,5°	45°	Angle, unit in degrees [e]
EB	5 mm	30 mm	Radius [f]
EC	0,45 mm	0,73 mm	Diameter

[a] A chamfer or radius is allowed to a maximum depth of 0,5 mm from the ferrule endface.

[b] The delatch housing shall be movable to the right ~~and~~ or left ~~directions~~. Dimensions *L*, *M* and *V* are given when the ~~coupling sleeve is moved in its most right-direction position~~ delatch housing is at the furthest right.

[c] Dimension *J* is given for the plug endface when not mated. ~~It is noticed that~~ The ferrule is movable by a certain axial compression force with direct contacting endfaces, and therefore dimension *J* is variable. Ferrule compression force shall be 5,5 N to 6,5 N when the position of the optical datum target from the mechanical datum target is moved in the range of 3,9 mm to 4,1 mm. In addition, dimension *J* shall become less than 3,25 mm with a relatively large axial compression force. The compression force shall be measured according to IEC 61300-3-22.

[d] ~~The right-side position of *Q* shall become left-side position to the mechanical datum target when the coupling sleeve is moved to its most left-direction position.~~ *Q* is to the right of the mechanical datum target when the delatch housing is to the right (connected state) and to the left of the mechanical datum target when the delatch housing is to the left (disconnected state).

[e] 40° to 45° are desirable to minimize debris for backplane connectors.

[f] Dome eccentricity of the spherically polished ferrule endface shall be less than ~~70~~ 50 µm.

Documents
Document Sharing Hub
Full document details: IEC 61754-6 2022 RLV

Table 8 – Grade of the 4,5 mm duplex plug connector

Grade	Dimensions		Remarks
	A		
	Minimum	Maximum	
A	See IEC 61755-3-1		a
B	See IEC 61755-3-1		a
C	See IEC 61755-3-1		a
D	See IEC 61755-3-1		a
~~Am~~	~~1,248 3~~	~~1,249 5~~	~~b~~
~~Bm~~	~~1,246 7~~	~~1,249 5~~	~~b~~
A_m	Grade not specified at this time		a b
B_m	1,246 7	1,249 5	a b
C_m	Grade not specified at this time		a b

[a] ~~See IEC 61755-3-1.~~ Add grade number to the interface reference number.

[b] See IEC 61755-6-1 for guidance.

Figure 3 is an example of a simplex adaptor connector interface. Table 9 gives dimensions of the simplex adaptor connector interface and Table 10 gives the grade of the simplex adaptor connector interface.

Documents
Document Sharing Hub

Full document details: IEC 61754-6 2022 RLV

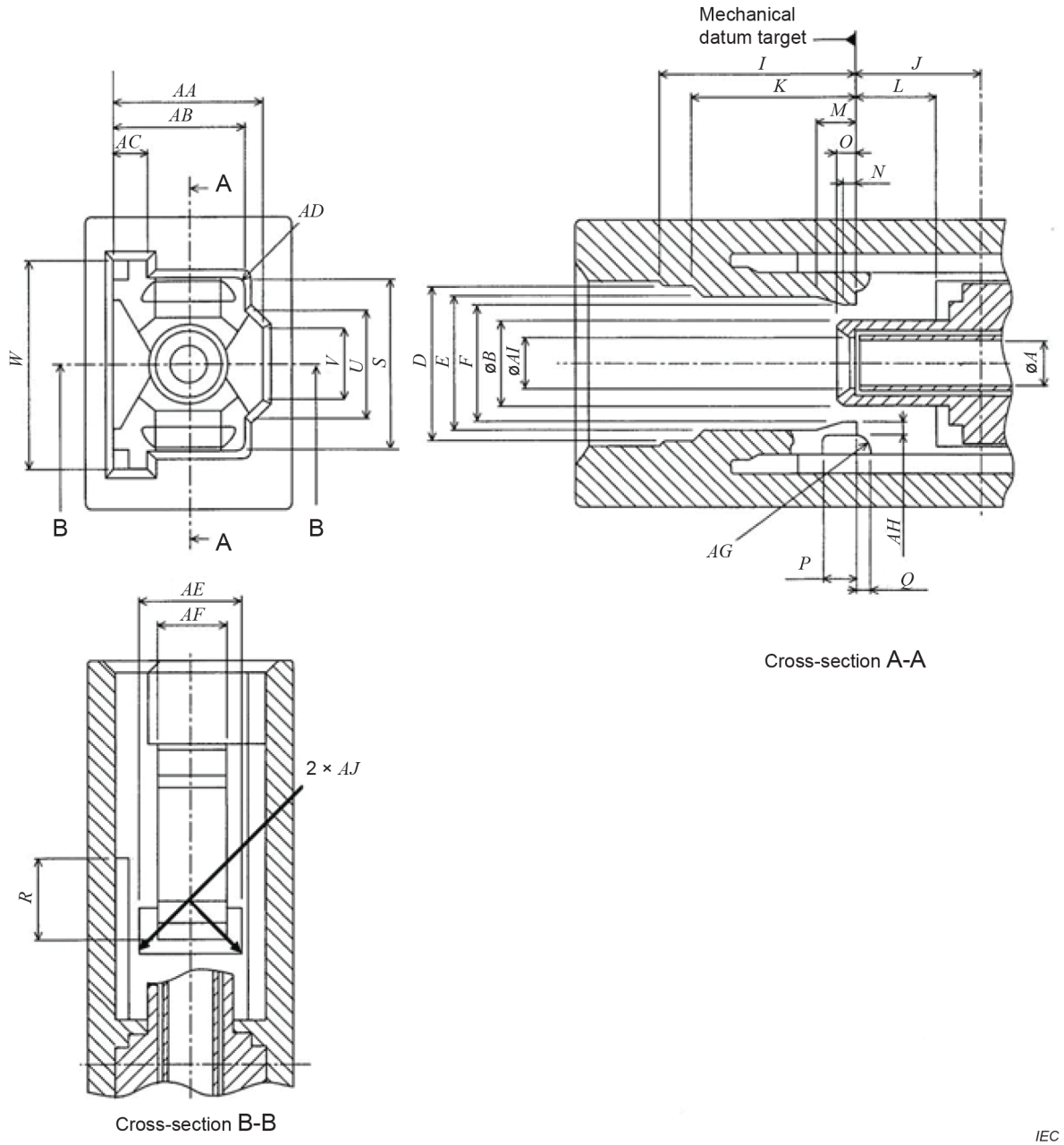

Figure 3 – Simplex adaptor connector interface – Push/pull

Documents
Document Sharing Hub
Full document details: IEC 61754-6 2022 RLV

Table 9 – Dimensions of the simplex adaptor connector interface

Reference	Dimensions mm		Remarks
	Minimum	Maximum	
A	See Table 10		Diameter
B	2,39	2,59	Diameter
D	4,8	5	
E	4,55	–	
F	2,9	3,5	[a]
I	–	6,5	
J	3,9	4,1	
K	–	5,4	
L	2,55	2,7	
M	–	1,4	
N	–	0,55	
O	–	0,6	
P	–	1,2	
Q	–	0,4	
R	–	2,55	
S	5,65	5,75	
U	3,8	4	
V	3,3	–	
W	6,7	–	
AA	4,45	4,55	
AB	4,01	4,11	
AC	0,95	1,15	
AD	–	0,2	Radius
AE	2,8	2,95	
AF	1,9	2,1	
AG	0,3	–	Radius
AH	0,4	0,55	
AI	1,34	1,44	Diameter
AJ	–	0,3	Radius

[a] Dimension *F* shall become greater than 4,5 mm when a plug is coupled to or removed from the adaptor.

Documents
Document Sharing Hub
Full document details: IEC 61754-6 2022 RLV

Table 10 – Grade of the simplex adaptor connector

Grade	Dimensions mm		Remarks
	Minimum	Maximum	
1	–	–	Resilient sleeve [a]

[a] The connector alignment feature is a resilient alignment sleeve. The feature shall accept a pin gauge to the centre of the adaptor with a force of 1,0 N to 2,5 N under the condition that another pin gauge is inserted into the feature from the other side. The centre of the adaptor is defined by the right-side position of dimension *J*. The pin gauge is shown in Figure 4 and Table 11.

Figure 4 is an example of a pin gauge for resilient alignment sleeve. Table 11 gives pin gauge dimensions.

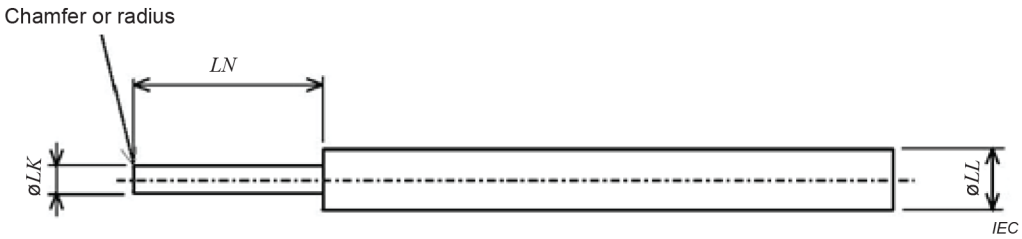

Figure 4 – Pin gauge for resilient alignment sleeve

Table 11 – Pin gauge dimensions

Reference	Dimensions mm		Remarks
	Minimum	Maximum	
LK	1,248 5	1,249 5	Surface roughness grade N4 (0,2 µm radius)
LL	2,6	2,8	
LN	4,7	~~9,5~~ –	

Figure 5 is an example of a 4,5 mm duplex adaptor connector interface. Table 12 gives dimensions of the 4,5 mm duplex adaptor connector interface and Table 13 gives the grade of the 4,5 mm duplex adaptor connector interface.

Documents
Document Sharing Hub
Full document details: IEC 61754-6 2022 RLV

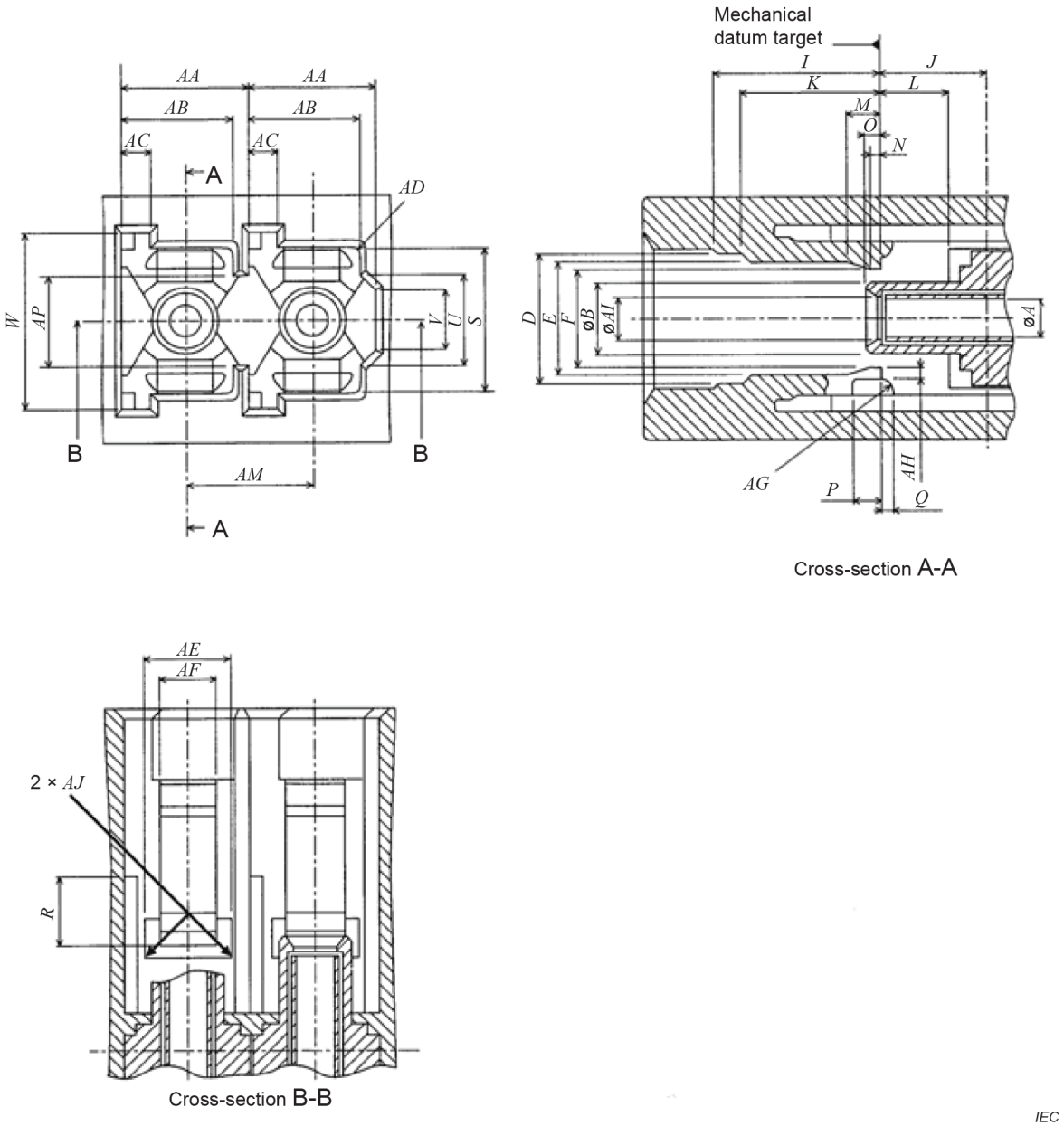

Figure 5 – 4,5 mm duplex adaptor connector interface – Push/pull

Documents
Document Sharing Hub
Full document details: IEC 61754-6 2022 RLV

Table 12 – Dimensions of the 4,5 mm duplex adaptor connector interface

Reference	Dimensions mm		Remarks
	Minimum	Maximum	
A	See Table 13		
B	2,39	2,59	
D	4,8	5	
E	4,55	–	
F	2,9	3,5	[a]
I	–	6,5	
J	3,9	4,1	
K	–	5,4	
L	2,55	2,7	
M	–	1,4	
N	–	0,55	
O	–	0,6	
P	–	1,2	
Q	–	0,4	
R	–	2,55	
S	5,65	5,75	
U	3,8	4	
V	3,3	–	
W	6,7	–	
AA	4,45	4,55	
AB	4,01	4,11	
AC	0,95	1,15	
AD	–	0,2	Radius
AE	2,8	2,95	
AF	1,9	2,1	
AG	0,3	–	Radius
AH	0,4	0,55	
AI	1,34	1,44	Diameter
AJ	–	0,3	Radius
AM	4,45	4,55	
AP	3,8	4	

[a] Dimension *F* shall become greater than 4,5 mm when a plug is coupled to or removed from the adaptor.

Documents
Document Sharing Hub
Full document details: IEC 61754-6 2022 RLV

Table 13 – Grade of the 4,5 mm duplex adaptor connector

Grade	Dimensions mm		Notes
	Minimum	Maximum	
1	–	–	Resilient sleeve [a]

[a] The connector alignment feature is a resilient alignment sleeve. The feature shall accept a pin gauge to the centre of the adaptor with a force of 1,0 N to 2,5 N under the condition that another pin gauge is inserted into the feature from the other side. The centre of the adaptor is defined by the right-side position of dimension J. The pin gauge is shown in Figure 4 and Table 11.

Figure 6 is an example of an 8-port adaptor connector interface. Table 14 gives dimensions of the 8-port adaptor connector interface and Table 15 gives the grade of the 8-port adaptor connector interface.

Documents
Document Sharing Hub
Full document details: IEC 61754-6 2022 RLV

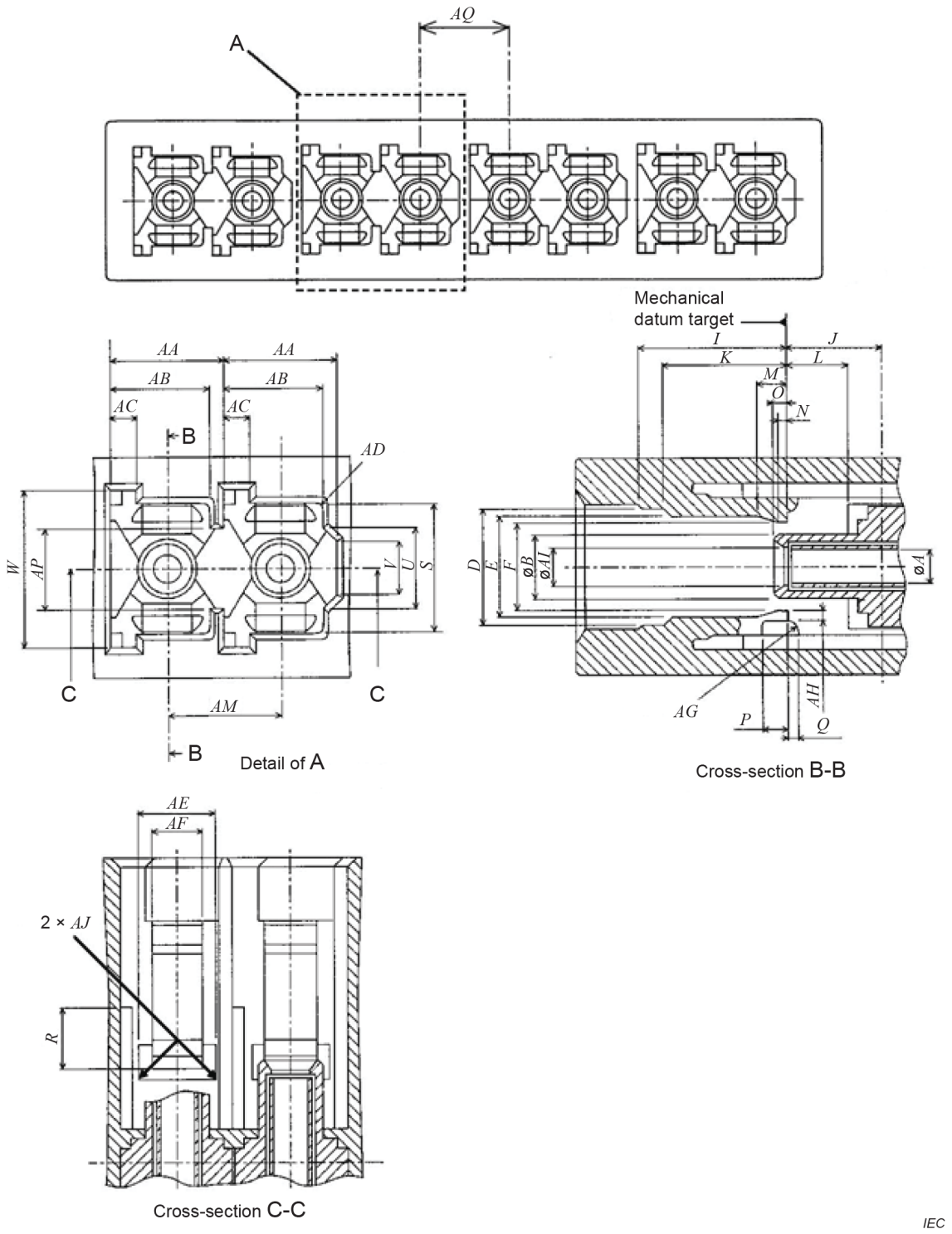

Figure 6 – 8-port adaptor connector interface – Push/pull

Documents
Document Sharing Hub
Full document details: IEC 61754-6 2022 RLV

Table 14 – Dimensions of the 8-port adaptor connector interface

Reference	Dimensions mm		Remarks
	Minimum	Maximum	
A	See Table 15		
B	2,39	2,59	
D	4,8	5	
E	4,55	–	
F	2,9	3,5	[a]
I	–	6,5	
J	3,9	4,1	
K	–	5,4	
L	2,55	2,7	
M	–	1,4	
N	–	0,55	
O	–	0,6	
P	–	1,2	
Q	–	0,4	
R	–	2,55	
S	5,65	5,75	
U	3,8	4	
V	3,3	–	
W	6,7	–	
AA	4,45	4,55	
AB	4,01	4,11	
AC	0,95	1,15	
AD	–	0,2	Radius
AE	2,8	2,95	
AF	1,9	2,1	
AG	0,3	–	Radius
AH	0,4	0,55	
AI	1,34	1,44	Diameter
AJ	–	0,3	Radius
AM	4,45	4,55	
AP	3,8	4	
AQ	4,8	5,2	

[a] Dimension *F* shall become greater than 4,5 mm when a plug is coupled to or removed from the adaptor.

Documents
Document Sharing Hub
Full document details: IEC 61754-6 2022 RLV

Table 15 – Grade of the 8-port adaptor connector

Grade	Dimensions mm		Notes
	Minimum	Maximum	
1	–	–	Resilient sleeve [a]

[a] The connector alignment feature is a resilient alignment sleeve. The feature shall accept a pin gauge to the centre of the adaptor with a force of 1,0 N to 2,5 N under the condition that another pin gauge is inserted into the feature from the other side. The centre of the adaptor is defined by the right-side position of dimension *J*. The pin gauge is shown in Figure 4 and Table 11.

Figure 7 is an example of a plug connector interface. Table 16 gives dimensions of the plug connector interface and Table 17 gives the grade of the plug connector interface.

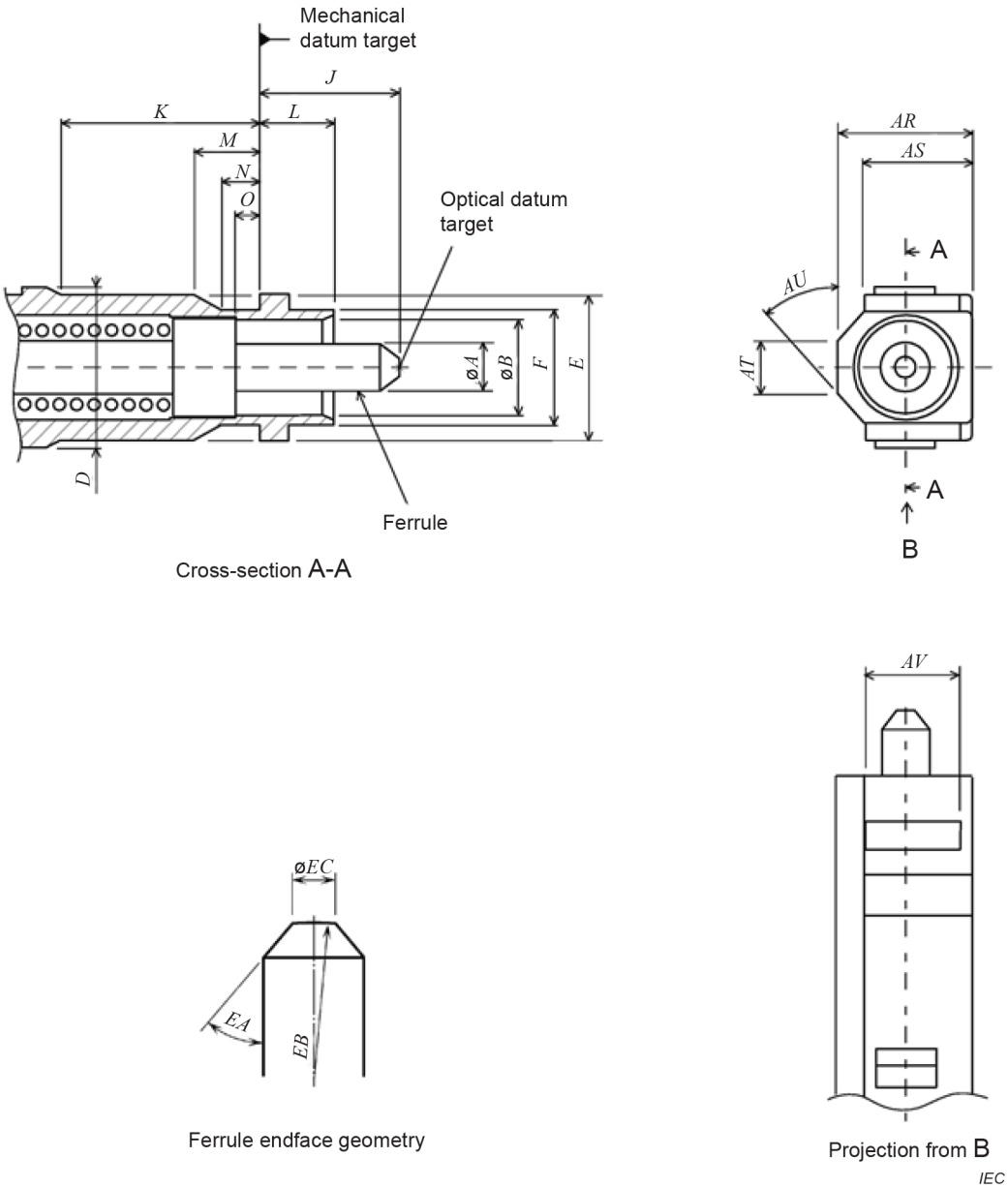

Figure 7 – Plug connector interface – For printed board housings

Documents
Document Sharing Hub
Full document details: IEC 61754-6 2022 RLV

Table 16 – Dimensions of the plug connector interface

Reference	Dimensions		Notes
	Minimum	Maximum	
A	See Table 17	~~1,249 5 mm~~	a
B	2,6 mm	2,7 mm	Diameter
D	4,65 mm	4,75 mm	
E	4,3 mm	4,4 mm	
F	3,3 mm	3,4 mm	
J	4,2 mm	4,5 mm	b
K	5,5 mm	–	
L	2,4 mm	2,5 mm	
M	1,5 mm	–	
N	0,6 mm	–	
O	0,5 mm	–	
AR	3,65 mm	3,75 mm	
AS	2,9 mm	3,0 mm	
AT	1,7 mm	2,1 mm	
AU	43°	47°	Angle, unit in degrees
AV	–	3,0 mm	
EA	32,5°	45°	Angle, unit in degrees [c]
EB	5 mm	30 mm	Radius [d]
EC	0,45 mm	0,73 mm	

NOTE 1 A chamfer or radius is allowed to a maximum depth of 0,5 mm from the ferrule endface.

NOTE 2 40° to 45° are desirable to minimize debris for backplane connectors.

[a] A chamfer or radius is allowed to a maximum depth of 0,5 mm from the ferrule endface.

[b] Dimension *J* is given for the plug endface when not mated. ~~It is noticed that~~ The ferrule is movable by a certain axial compression force with direct contacting endfaces, and therefore dimension *J* is variable. Ferrule compression force shall be 5,5 N to 6,5 N when the position of the optical datum target from the mechanical datum target is moved in the range of 3,9 mm to 4,1 mm. In addition, dimension *J* shall become less than 3,25 mm with a relatively large axial compression force. The compression force shall be measured according to IEC 61300-3-22.

[c] 40° to 45° are desirable to minimize debris for backplane connectors.

[d] Dome eccentricity of the spherically polished ferrule endface shall be less than ~~70~~ 50 µm.

Documents
Document Sharing Hub
Full document details: IEC 61754-6 2022 RLV

Table 17 – Grade of the plug connector

Grade	Dimensions mm		Notes
	A		
	Minimum	Maximum	
A	See IEC 61755-3-1		a
B	See IEC 61755-3-1		a
C	See IEC 61755-3-1		a
D	See IEC 61755-3-1		a
~~Am~~	~~1,248 3~~	~~1,249 5~~	~~b~~
~~Bm~~	~~1,246 7~~	~~1,249 5~~	~~b~~
A_m	Grade not specified at this time		a b
B_m	1,246 7	1,249 5	a b
C_m	Grade not specified at this time		a b

a ~~See IEC 61755-3-1.~~ Add grade number to the interface reference number.

b See IEC 61755-6-1 for guidance .

Figure 8 is an example of the sleeve holder interface. Table 18 gives dimensions of the sleeve holder interface and Table 19 gives the grade of the sleeve holder interface.

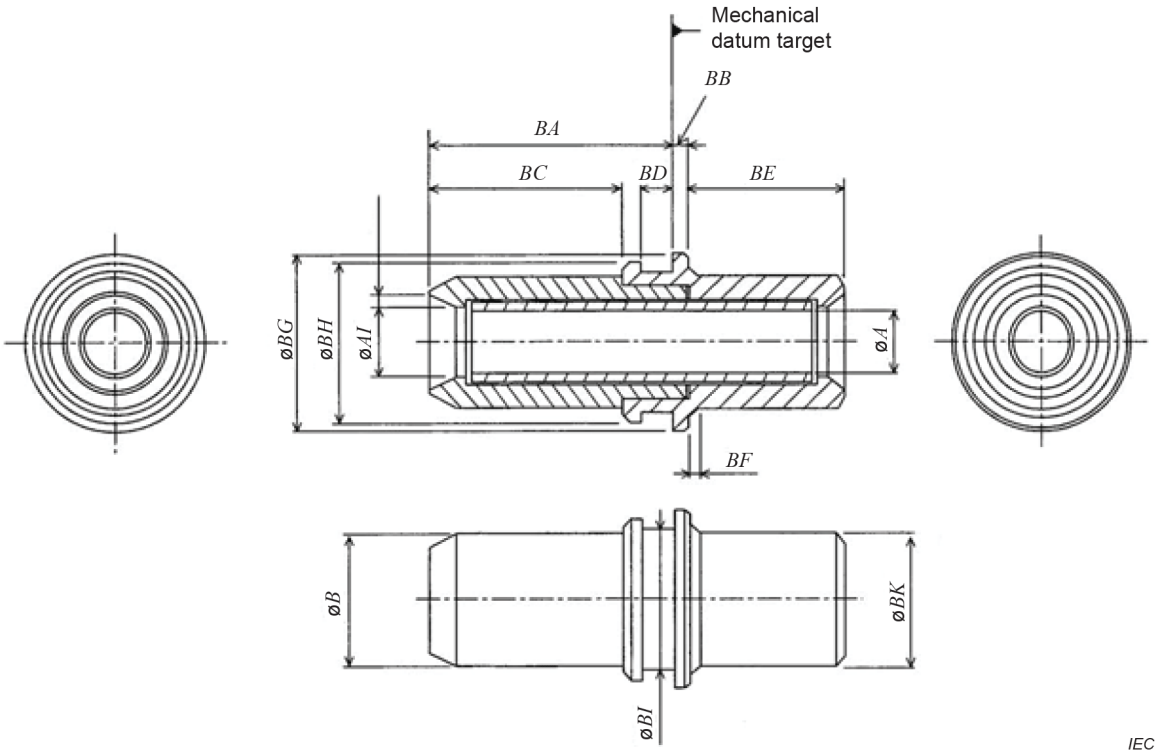

Figure 8 – Sleeve holder interface

Documents
Document Sharing Hub
Full document details: IEC 61754-6 2022 RLV

Table 18 – Dimensions of the sleeve holder interface

Reference	Dimensions mm		Remarks
	Minimum	Maximum	
A	See Table 19		
B	2,54	2,59	Diameter
AI	1,34	1,39	Diameter
BA	4,65	4,85	
BB	0,20	0,30	
BC	3,65	3,85	
BD	0,65	0,85	
BE	2,9	3,1	
BF	–	0,25	45° chamfer
BG	3,5	3,54	Diameter
BH	3,1	3,2	Diameter
BI	2,5	2,7	Diameter
BJ	0,29	0,37	
BK	2,49	2,59	Diameter

Table 19 – Grade of the sleeve holder

Grade	Dimensions mm		Remarks
	Minimum	Maximum	
1	–	–	Resilient sleeve [a]

[a] The connector alignment feature is a resilient alignment sleeve. The feature shall accept a pin gauge to a depth of 4,3 mm from the left side with a force of 1,0 N to 2,5 N under the condition that another pin gauge is inserted into the feature from the other side. The pin gauge is shown in Figure 4 and Table 11.

Figure 9 is an example of the 2-port backplane housing interface. Table 20 gives dimensions of the 2-port backplane housing interface and Table 21 gives the grade of the 2-port backplane housing interface.

Documents
Document Sharing Hub
Full document details: IEC 61754-6 2022 RLV

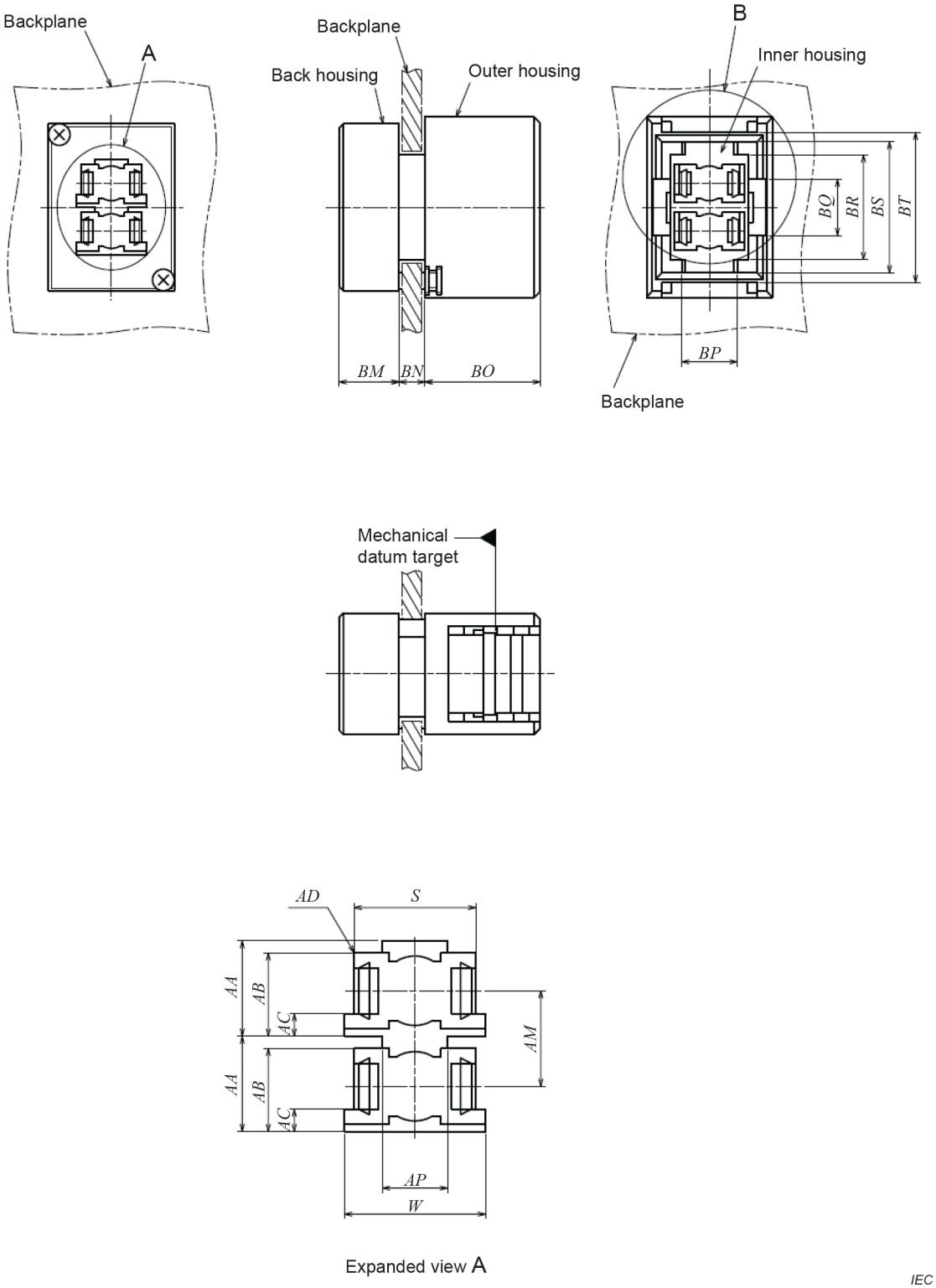

Figure 9 – 2-port backplane housing interface *(1 of 2)*

Documents
Document Sharing Hub
Full document details: IEC 61754-6 2022 RLV

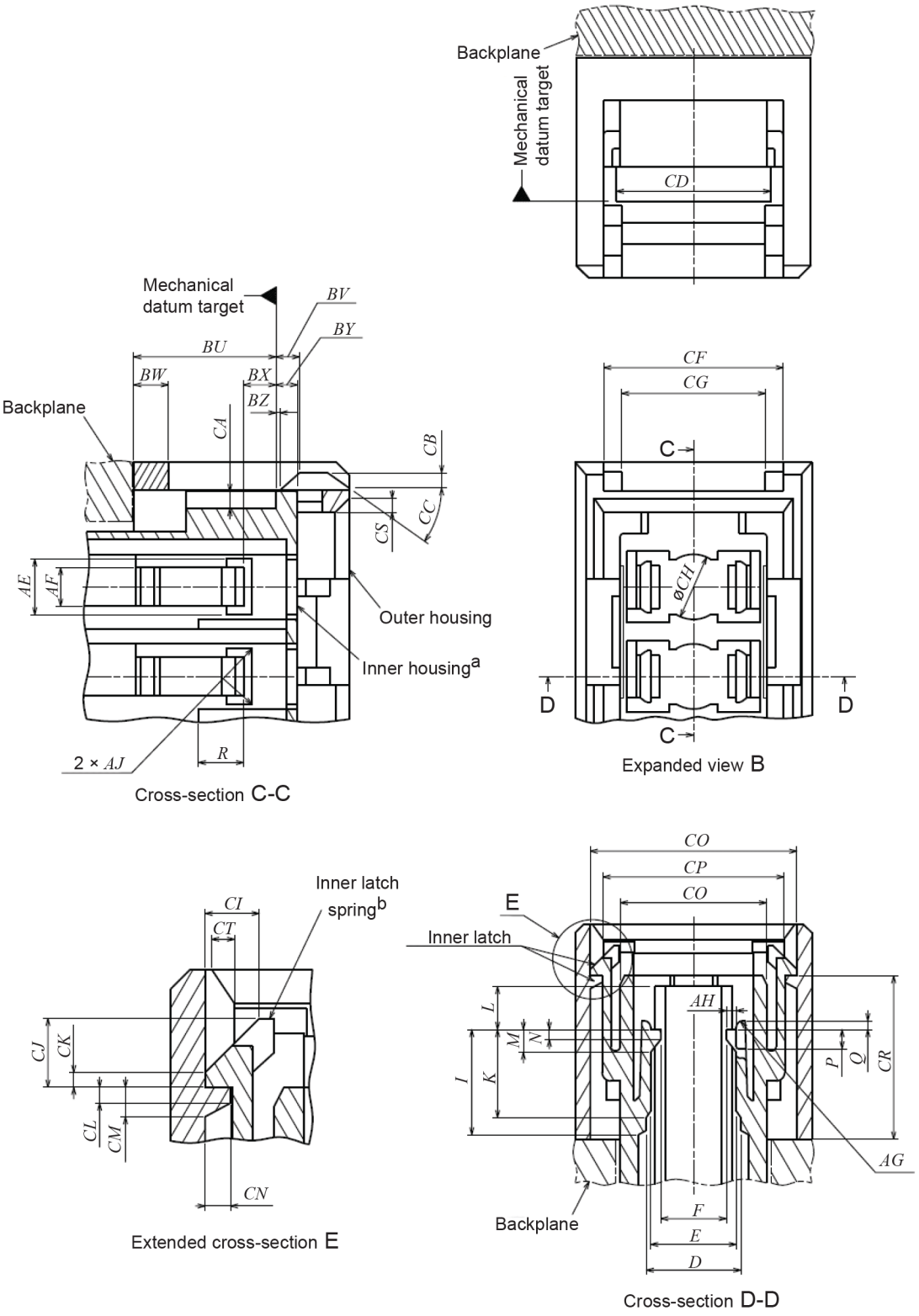

[a] In the cross-section C-C figure, the inner housing should be movable to the right by at least 0,9 mm, and to the left by at least 2 mm when the inner latch is released.

[b] In the expanded cross-section E figure, the inner latch spring should be moved by more than 0,65 mm to the right when the inner latch is released or latched.

Figure 9 *(2 of 2)*

Documents
Document Sharing Hub
Full document details: IEC 61754-6 2022 RLV

Table 20 – Dimensions of the 2-port backplane housing interface

Reference	Dimensions		Remarks
	Minimum	Maximum	
D	4,8 mm	5 mm	
E	4,55 mm	–	
F	2,9 mm	3,5 mm	a
I	–	6,5 mm	
K	–	5,4 mm	
L	2,6 mm	2,7 mm	
M	–	1,4 mm	
N	–	0,6 mm	
P	–	1,2 mm	
Q	–	0,4 mm	
R	–	2,55 mm	
S	5,65 mm	5,75 mm	
W	6,7 mm	–	
AA	4,45 mm	4,55 mm	
AB	4,01 mm	4,11 mm	
AC	0,95 mm	1,15 mm	
AD	–	0,2 mm	Radius
AE	2,8 mm	2,95 mm	
AF	1,9 mm	2,1 mm	
AG	0,3 mm	–	Radius
AH	0,4 mm	0,55 mm	
AJ	–	0.3 mm	Radius
AM	4,45 mm	4,55 mm	
AP	3,8 mm	4,0 mm	
BM	–	–	See Table 21
BN	–	–	See Table 21
BO	12,25 mm	12,35 mm	
BP	5,5 mm	5,7 mm	
BQ	4,6 mm	4,7 mm	
BR	11,2 mm	11,4 mm	
BS	13,95 mm	14,05 mm	
BT	16,2 mm	16,3 mm	
BU	7,72 mm	7,78 mm	b
BV	1,1 mm	1,4 mm	b
BW	2,2 mm	2,6 mm	
BX	1,95 mm	2,05 mm	
BY	1,15 mm	1,25 mm	
BZ	0,3 mm	0,4 mm	b
CA	0,725 mm	0,925 mm	
CB	0,9 mm	1,1 mm	
CC	35°	50°	Angle, unit in degrees
CD	8,1 mm	9,1 mm	

AVA Documents
Document Sharing Hub

Reference	Dimensions		Remarks
	Minimum	Maximum	
CF	10,05 mm	10,35 mm	
CG	8,1 mm	8,3 mm	
CH	3,4 mm	3,6 mm	Diameter
CI	1,17 mm	1,27 mm	
CJ	1,7 mm	2,3 mm	
CK	0,2 mm	0,3 mm	
CL	0,3 mm	0,4 mm	
CM	0,8 mm	1 mm	
CN	0,55 mm	0,65 mm	
CO	11,55 mm	11,65 mm	
CP	9,95 mm	10,03 mm	
CQ	7,92 mm	8 mm	
CR	9,37 mm	9,43 mm	
CS	0,55 mm	0,65 mm	45° chamfer
CT	0,55 mm	0,65 mm	45° chamfer

[a] Dimension *F* shall become greater than 4,5 mm when a plug is coupled to or removed from the backplane housing.

[b] These dimensions are given when the inner housing is moved ~~in its most left-side position under the condition that the inner latch is completed~~ to the furthest left position and when the inner latch is fully latched.

Table 21 – Grade of the 2-port backplane housing

Grade	Reference	Dimensions mm		Remarks
		Minimum	Maximum	
1	*BM*	6	6,2	Backplane thickness 2,4 mm
	BN	2,65	2,75	
2	*BM*	6	6,2	Backplane thickness 3,2 mm
	BN	3,45	3,55	

Figure 10 is an example of the 2-port printed board housing interface. Table 22 gives dimensions of the 2-port printed board housing interface.

Documents
Document Sharing Hub
Full document details: IEC 61754-6 2022 RLV

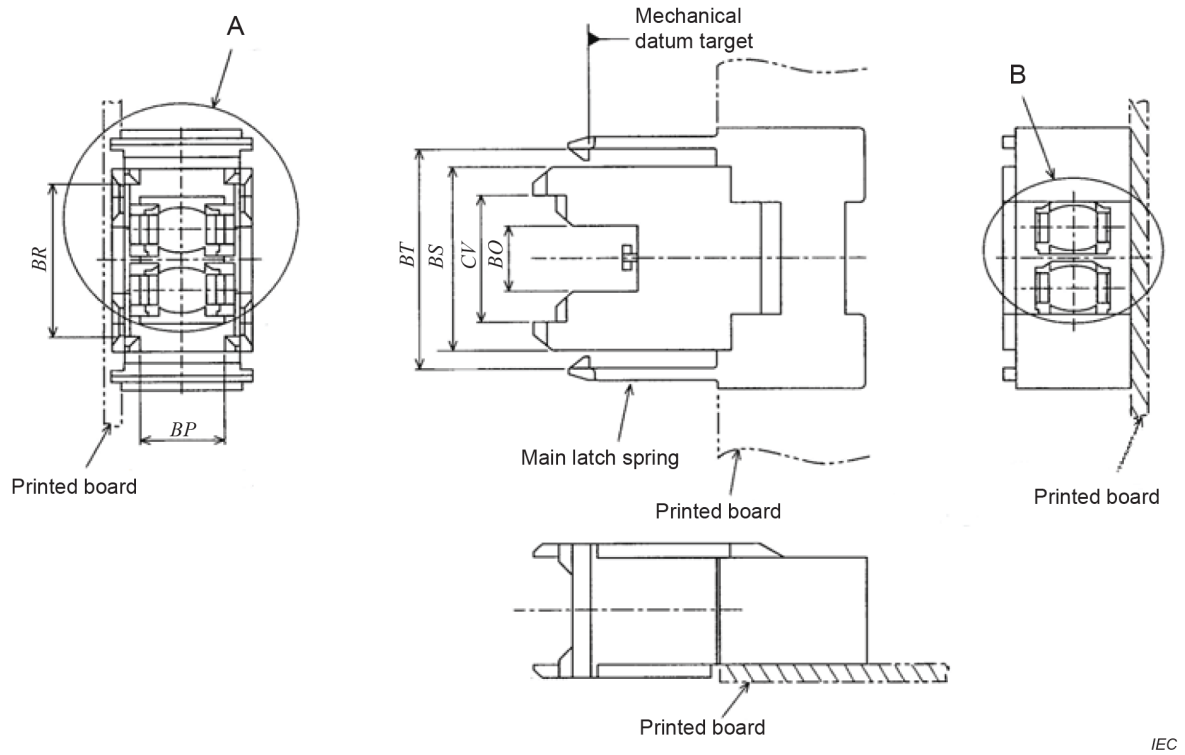

Figure 10 – 2-port printed board housing interface *(1 of 2)*

Documents
Document Sharing Hub
Full document details: IEC 61754-6 2022 RLV

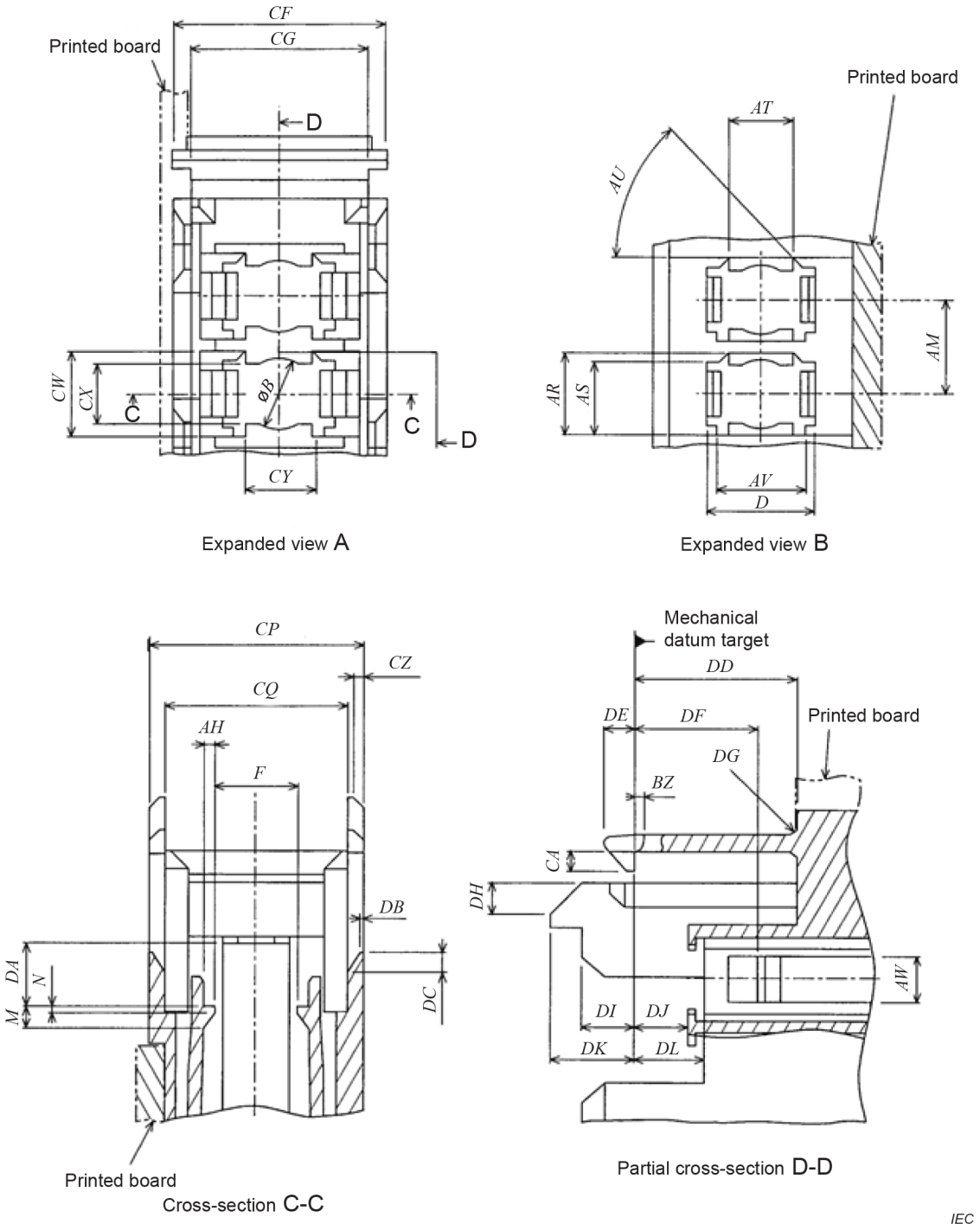

Figure 10 *(2 of 2)*

Documents
Document Sharing Hub
Full document details: IEC 61754-6 2022 RLV

Table 22 – Dimensions of the 2-port printed board housing interface

Reference	Dimensions		Remarks
	Minimum	Maximum	
B	3,07 mm	3,15 mm	Diameter [a]
D	5 mm	5,15 mm	
F	2,9 mm	3,5 mm	[b]
M	–	1,4 mm	
N	–	0,6 mm	
AH	0,4 mm	0,55 mm	
AM	4,45 mm	4,55 mm	
AR	4 mm	4,1 mm	
AS	3,25 mm	3,35 mm	
AT	2,3 mm	2,6 mm	
AU	42°	48°	Angle, unit in degrees
AV	4,7 mm	4,75 mm	
AW	1,7 mm	2,3 mm	
BP	5,9 mm	6,1 mm	
BQ	4,75 mm	4,95 mm	
BR	11,5 mm	11,7 mm	
BS	13,8 mm	13,9 mm	
BT	16 mm	16,4 mm	[c]
BZ	0,3 mm	0,4 mm	
CA	0,73 mm	0,83 mm	
CF	9,8 mm	9,9 mm	
CG	7,8 mm	8 mm	
CP	9,82 mm	9,9 mm	
CQ	8,01 mm	8,09 mm	
CV	9,2 mm	9,4 mm	
CW	3,95 mm	4,15 mm	
CX	2,75 mm	2,95 mm	
CY	2,9 mm	3,1 mm	
CZ	0,6 mm	0,7 mm	45° chamfer
DA	2,89 mm	2,99 mm	
DB	0,2 mm	0,3 mm	
DC	1 mm	1,1 mm	
DD	9,2 mm	9,6 mm	
DE	1,35 mm	1,45 mm	
DF	5,75 mm	5,85 mm	
DG	–	1 mm	Radius
DH	1,45 mm	1,55 mm	45° chamfer
DI	1,8 mm	2,1 mm	
DJ	2,35 mm	2,45 mm	
DK	3,84 mm	3,94 mm	
DL	3,37 mm	3,43 mm	

AVA Documents
Document Sharing Hub
Full document details: IEC 61754-6 2022 RLV

a	Dimension B shall become greater than 3,55 mm when a sleeve holder is inserted into or removed from the printed board housing.
b	Dimension F shall become greater than 4,5 mm when a plug is coupled to or removed from the printed board housing.
c	Dimension BT is defined at the top of the main latch springs. Dimension shall be greater than 16,3 mm at the base of the springs. Dimension BT at the top of the springs shall become greater than 18,5 mm when the printed board housing is coupled to or removed from a backplane housing.

Figure 11 is an example of the 8-port backplane housing interface. Table 23 gives dimensions of the 8-port backplane housing interface and Table 24 gives the grade of the 8-port backplane housing interface.

Documents
Document Sharing Hub
Full document details: IEC 61754-6 2022 RLV

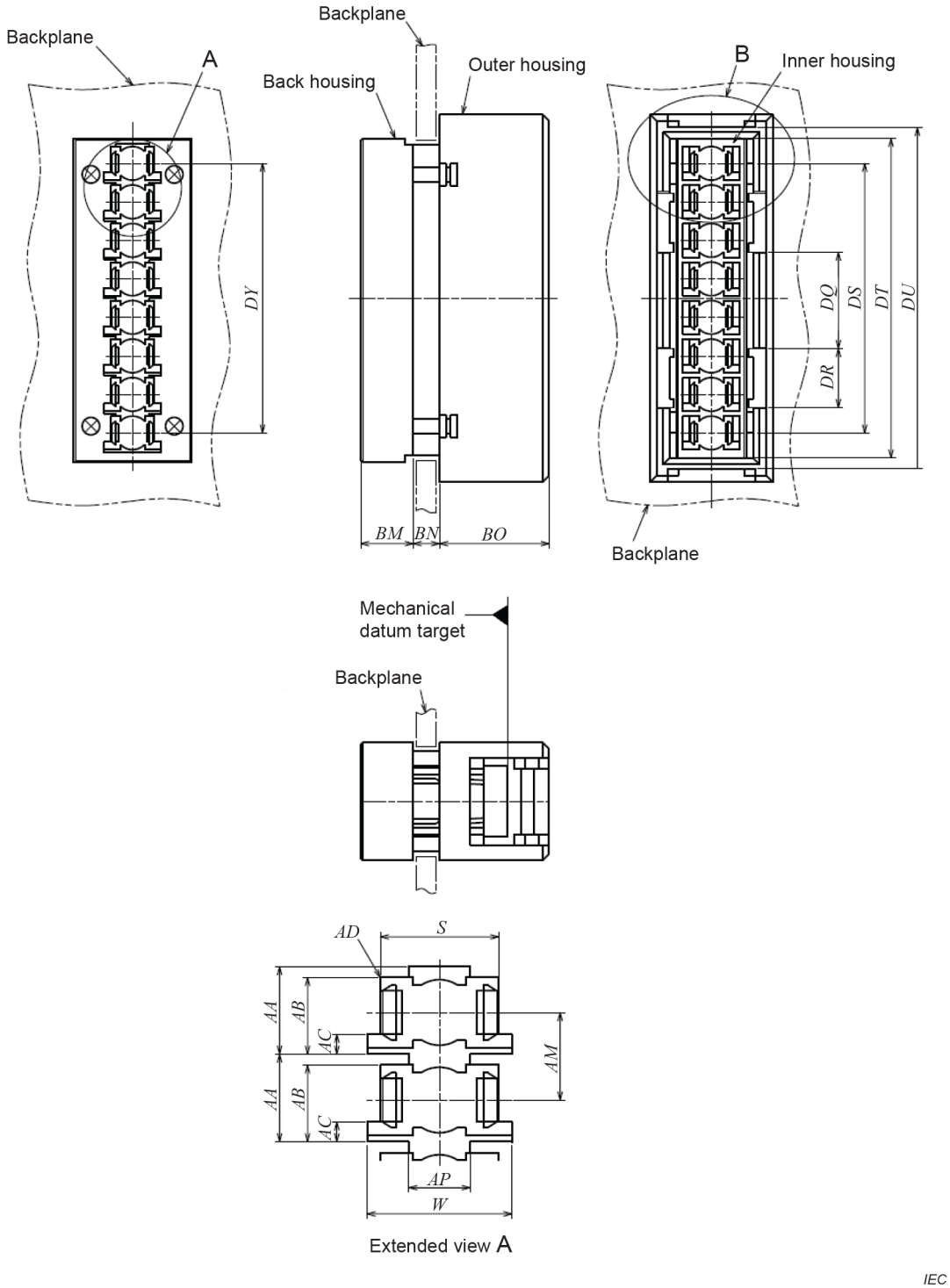

Figure 11 – 8-port backplane housing interface *(1 of 2)*

Documents
Document Sharing Hub
Full document details: IEC 61754-6 2022 RLV

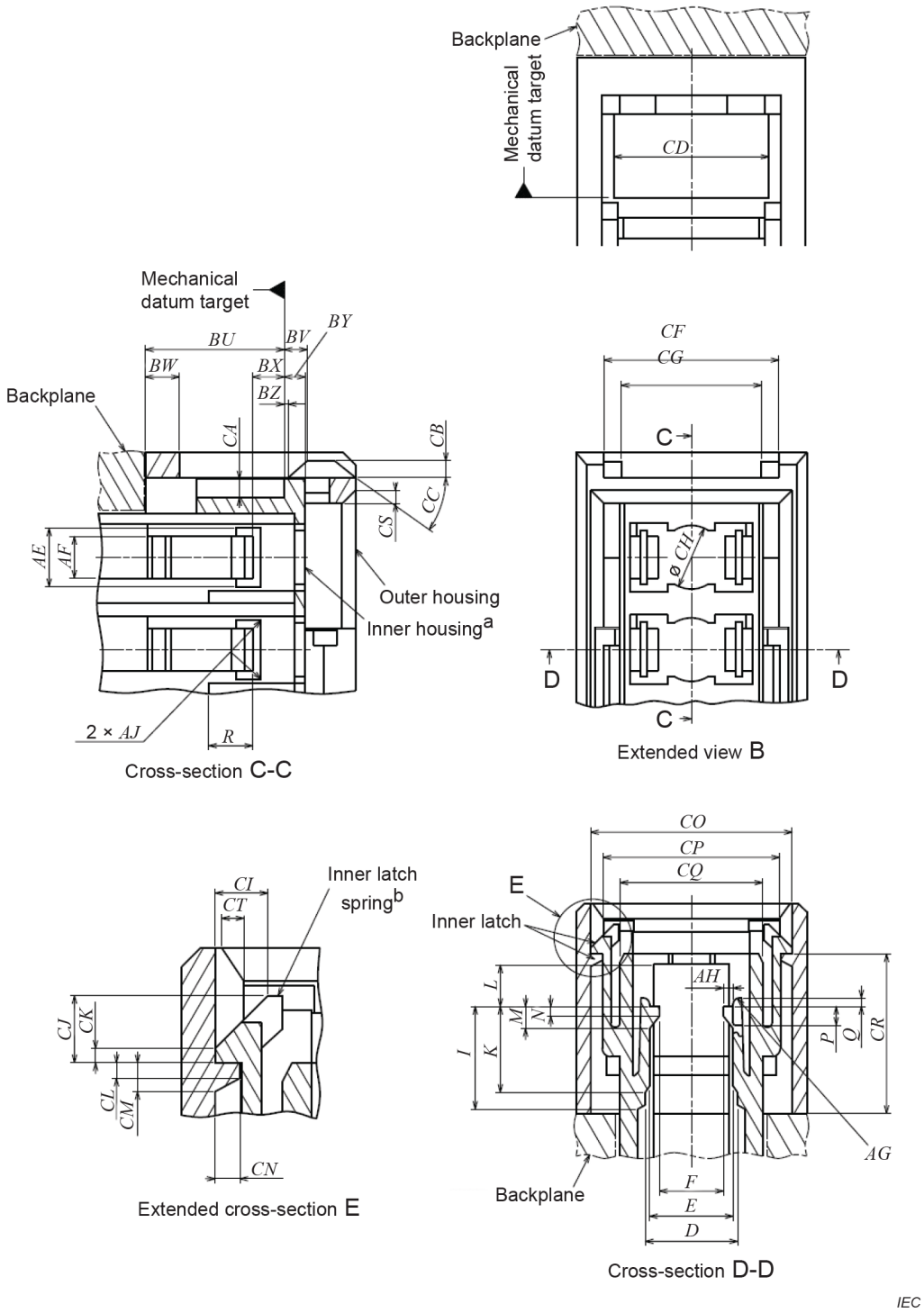

[a] In the cross-section C-C figure, the inner housing should be movable to the right by at least 0,9 mm, and to the left by at least 2 mm when the inner latch is released.

[b] In the expanded cross-section E figure, the inner latch spring ~~should~~ shall move by more than 0,65 mm to the right when the inner latch is released or latched.

Figure 11 *(2 of 2)*

Documents
Document Sharing Hub
Full document details: IEC 61754-6 2022 RLV

Table 23 – Dimensions of the 8-port backplane housing interface

Reference	Dimensions		Remarks
	Minimum	Maximum	
D	4,8 mm	5 mm	
E	4,55 mm	–	
F	2,9 mm	3,5 mm	a
I	–	6,5 mm	
K	–	5,4 mm	
L	2,6 mm	2,7 mm	
M	–	1,4 mm	
N	–	0,6 mm	
P	–	1,2 mm	
Q	–	0,4 mm	
R	–	2,55 mm	
S	5,65 mm	5,75 mm	
W	6,7 mm	–	
AA	4,45 mm	4,55 mm	
AB	4,01 mm	4,11 mm	
AC	0,95 mm	1,15 mm	
AD	–	0,2 mm	Radius
AE	2,8 mm	2,95 mm	
AF	1,9 mm	2,1 mm	
AG	0,3 mm	–	Radius
AH	0,4 mm	0,55 mm	
AJ	–	0,3 mm	Radius
AM	4,45 mm	4,55 mm	
AP	3,8 mm	4 mm	
BM	See Table 24	See Table 24	
BN	See Table 24	See Table 24	
BO	12,25 mm	12,35 mm	
BU	7,72 mm	7,78 mm	b
BV	1,1 mm	1,4 mm	b
BW	2,2 mm	2,6 mm	
BX	1,95 mm	2,05 mm	
BY	1,15 mm	1,25 mm	
BZ	0,3 mm	0,4 mm	b
CA	0,725 mm	0,925 mm	
CB	0,9 mm	1,1 mm	
CC	35°	50°	Angle, unit in degrees
CD	8,1 mm	9,1 mm	
CF	10,05 mm	10,35 mm	
CG	8,1 mm	8,3 mm	
CH	3,4 mm	3,6 mm	
CI	1,17 mm	1,27 mm	
CJ	1,7 mm	2,3 mm	

Documents
Document Sharing Hub

Reference	Dimensions		Remarks
	Minimum	Maximum	
CK	0,2 mm	0,3 mm	
CL	0,3 mm	0,4 mm	
CM	0,8 mm	1 mm	
CN	0,55 mm	0,65 mm	
CO	11,55 mm	11,65 mm	
CP	9,95 mm	10,03 mm	
CQ	7,92 mm	8 mm	
CR	9,37 mm	9,43 mm	
CS	0,55 mm	0,65 mm	45° chamfer
CT	0,55 mm	0,65 mm	45° chamfer
DQ	10,3 mm	10,7 mm	
DR	6,9 mm	7 mm	
DS	–	31,9 mm	
DT	36,55 mm	36,65 mm	
DU	38,8 mm	38,9 mm	
DY	31,4 mm	31,6 mm	

[a] Dimension *F* shall become greater than 4,5 mm when a plug is coupled to or removed from the backplane housing.

[b] These dimensions are given when the inner housing is moved ~~in its most left-side position under the condition that the inner latch is completed~~ to the furthest left position and when the inner latch is fully latched.

Table 24 – Grade of the 8-port backplane housing

Grade	Reference	Dimensions mm		Remarks
		Minimum	Maximum	
1	*BM*	6	6,2	Backplane thickness 2,4 mm
	BN	2,65	2,75	
2	*BM*	6	6,2	Backplane thickness 3,2 mm
	BN	3,45	3,55	

Figure 12 is an example of the 8-port printed board housing interface. Table 25 gives dimensions of the 8-port printed board housing interface.

Documents
Document Sharing Hub
Full document details: IEC 61754-6 2022 RLV

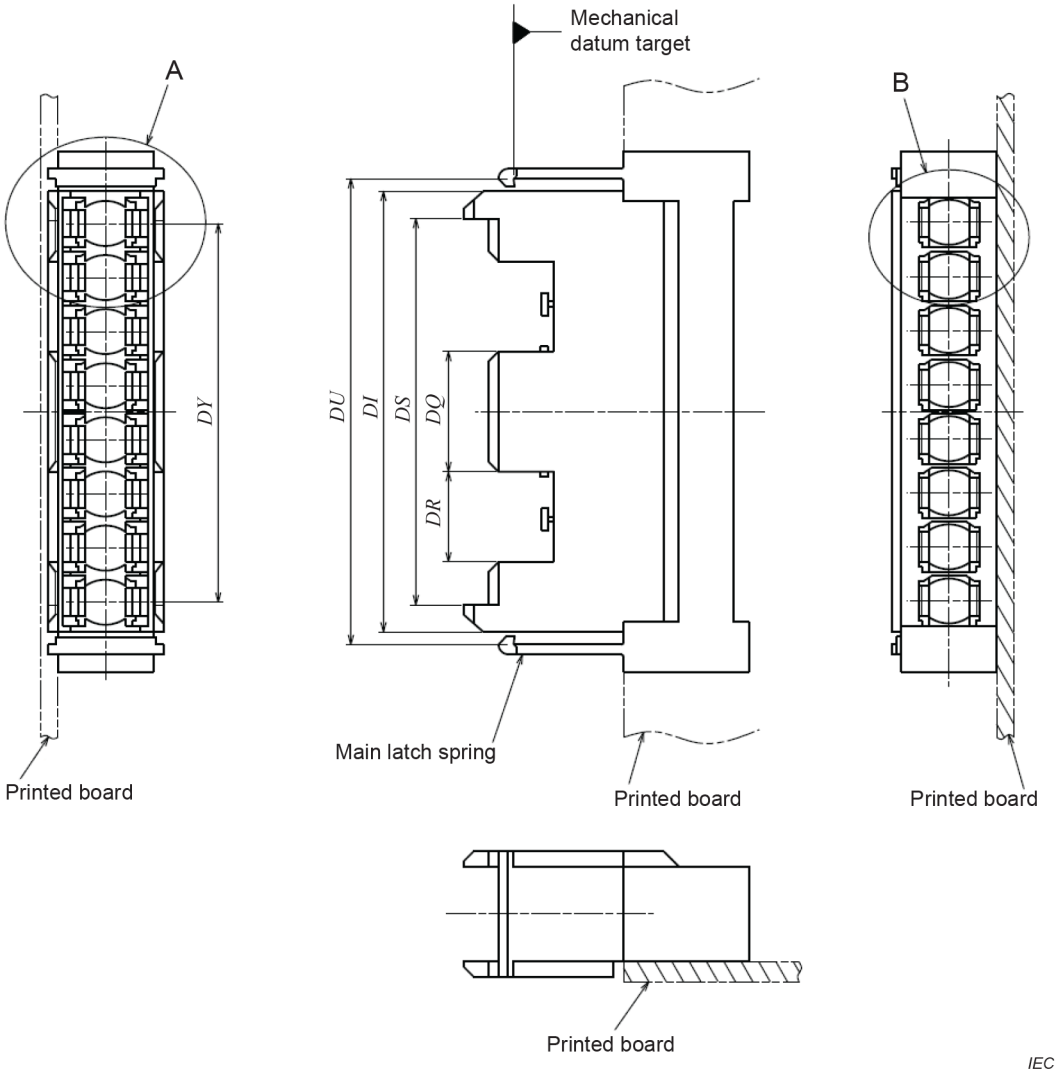

Figure 12 – 8-port printed board housing interface *(1 of 2)*

Documents
Document Sharing Hub
Full document details: IEC 61754-6 2022 RLV

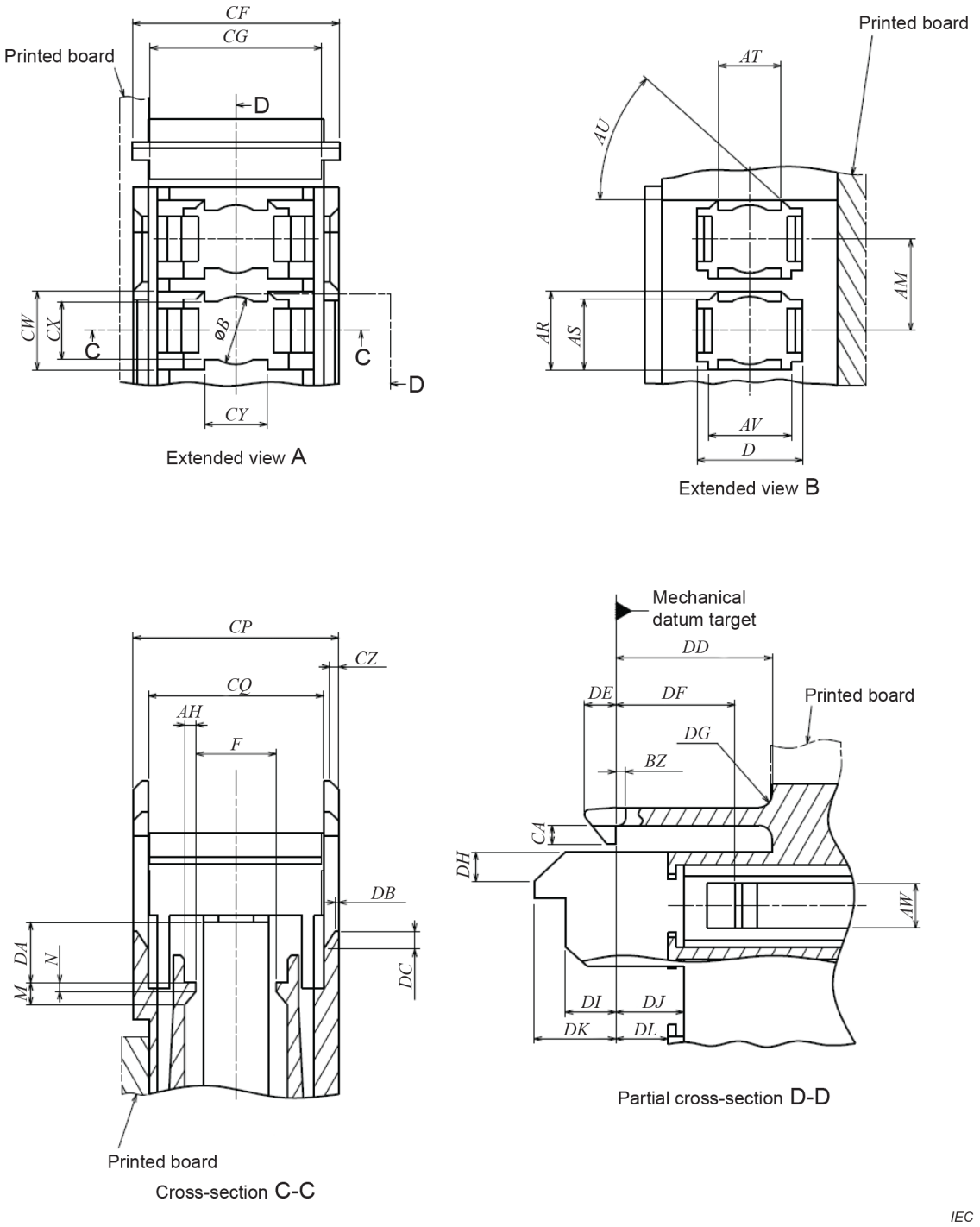

Figure 12 *(2 of 2)*

Documents
Document Sharing Hub
Full document details: IEC 61754-6 2022 RLV

Table 25 – Dimensions of the 8-port printed board housing interface

Reference	Dimensions		Remarks
	Minimum	Maximum	
B	3,07 mm	3,15 mm	a
D	5 mm	5,15 mm	
F	2,9 mm	3,5 mm	b
M	–	1,4 mm	
N	–	0,6 mm	
AH	0,4 mm	0,55 mm	
~~AJ~~	~~–~~	~~0,3 mm~~	~~Radius~~
AM	4,45 mm	4,55 mm	
AR	4 mm	4,1 mm	
AS	3,25 mm	3,35 mm	
AT	2,3 mm	2,6 mm	
AU	42°	48°	Angle, unit in degrees
AV	4,7 mm	4,75 mm	
AW	1,7 mm	2,3 mm	
BZ	0,3 mm	0,4 mm	
CA	0,73 mm	0,83 mm	
CF	9,8 mm	9,9 mm	
CG	7,8 mm	8 mm	
CP	9,82 mm	9,9 mm	
CQ	8,01 mm	8,09 mm	
CW	3,95 mm	4,15 mm	
CX	2,75 mm	2,95 mm	
CY	2,9 mm	3,1 mm	
CZ	0,6 mm	0,7 mm	45° chamfer
DA	2,89 mm	2,99 mm	
DB	0,2 mm	0,3 mm	
DC	1 mm	1,1 mm	
DD	9,2 mm	9,6 mm	
DE	1,35 mm	1,45 mm	
DF	5,75 mm	5,85 mm	
DG	–	1 mm	Radius
DH	1,45 mm	1,55 mm	45° chamfer
DI	1,8 mm	2,1 mm	
DJ	2,35 mm	2,45 mm	
DK	3,84 mm	3,94 mm	
DL	3,37 mm	3,43 mm	
DQ	9,9 mm	10 mm	
DR	7,5 mm	7,6 mm	
DS	31,9 mm	32,1 mm	
DT	36,4 mm	36,5 mm	
DU	38,6 mm	39 mm	c
DY	31,4 mm	31,6 mm	

AVA Documents
Document Sharing Hub
Full document details: IEC 61754-6 2022 RLV

a	Dimension B shall become greater than 3,55 mm when a sleeve holder is inserted into or removed from the printed board housing.
b	Dimension F shall become greater than 4,5 mm when a plug is coupled to or removed from the printed board housing.
c	Dimension DU is defined at the top of the main latch springs. This dimension shall be greater than 38,9 mm at the base of the springs. Dimension DU at the top of the springs shall become greater than 41,1 mm when the printed board housing is coupled to or removed from a backplane housing.

Figure 13 is an example of the simplex active device receptacle interface. Table 26 gives dimensions of the simplex active device receptacle interface and Table 27 gives alignment feature of the simplex active device receptacle interface.

Documents
Document Sharing Hub
Full document details: IEC 61754-6 2022 RLV

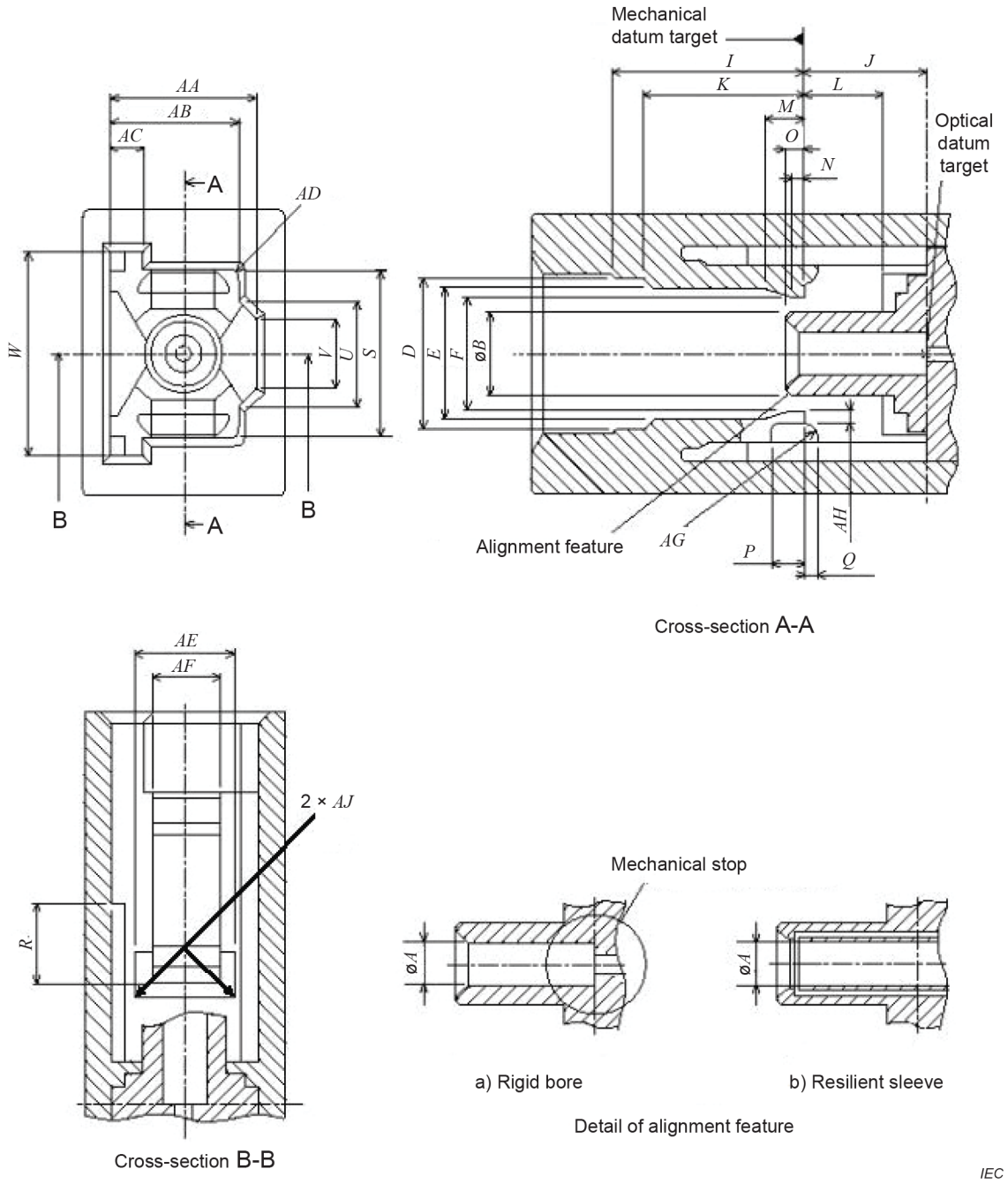

Figure 13 – Simplex active device receptacle interface

Documents
Document Sharing Hub
Full document details: IEC 61754-6 2022 RLV

Table 26 – Dimensions of the simplex active device receptacle interface

Reference	Dimensions mm		Remarks
	Minimum	Maximum	
A	See Table 27		
B	2,29	2,59	
D	4,8	5	
E	4,55	–	
F	2,9	3,5	[a]
I	–	6,5	
J	3,9	4,1	[b]
K	–	5,4	
L	2,55	2,7	
M	–	1,4	
N	–	0,55	
O	–	0,6	
P	–	1,2	
Q	–	0,4	
R	–	2,55	
S	5,65	5,75	
U	3,8	4	
V	3,3	–	
W	6,7	–	
AA	4,45	4,55	
AB	4,01	4,11	
AC	0,95	1,15	
AD	–	0,2	Radius
AE	2,8	2,95	
AF	1,9	2,1	
AG	0,3	–	Radius
AH	0,4	0,55	
AJ	–	0,3	Radius

[a] Dimension *F* ~~should~~ shall become greater than 4,5 mm when a plug is coupled to or removed from the receptacles.

[b] A mechanical stop feature may be required in order to bring the fibre tip to the optical datum target. An example of a mechanical stop feature is shown in Figure 13, Detail of alignment feature, a) Rigid bore.

Documents
Document Sharing Hub
Full document details: IEC 61754-6 2022 RLV

Table 27 – Alignment feature grade

Grade	Dimensions mm		Remarks
	Minimum	Maximum	
1	1,251	1,252	a b
2	1,251	1,254	a b
3	1,251	1,275	a b
4			b c

[a] Where the connector alignment feature is a rigid bore, as shown in Figure 13, Detail of alignment feature, a) Rigid bore, the alignment feature is equipped with a mechanical stop. The detail of the mechanical stop feature is shown in Figure 14.

[b] Add the grade number to the interface reference number.

[c] Where the connector alignment feature is a resilient sleeve, as shown in Figure 13, Detail of alignment feature, b) Resilient sleeve, the alignment feature is not equipped with a mechanical stop. The optical datum target of the plug connector is not limited by the alignment feature. The alignment feature should accept a pin gauge to the centre of the receptacle with a force of 1 N to 2,5 N. The centre of the receptacle is defined by the right side position of dimension *J*. The pin gauge is shown in Figure 4 and Table 11.

Figure 14 is an example of the detail of the mechanical stop for rigid bore alignment feature. Table 28 gives dimensions of the mechanical stop for rigid bore alignment feature and Table 29 gives dimensions of the mechanical stop feature grade.

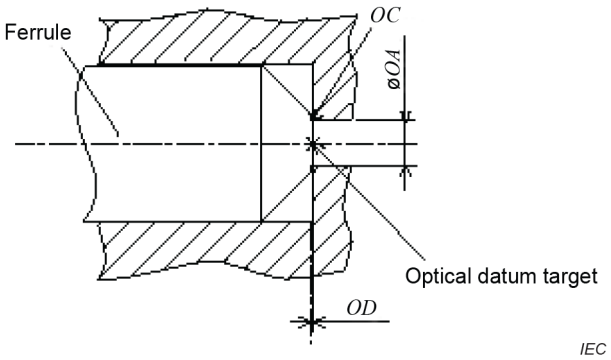

Figure 14 – Detail of the mechanical stop for rigid bore alignment feature

Table 28 – Dimensions of the mechanical stop for rigid bore alignment feature

Reference	Dimensions mm		Remarks
	Minimum	Maximum	
OA			[a] and see Table 29
OC	0	0,05	Radius
OD			[a] and see Table 29

[a] Whatever form of mechanical stop feature is incorporated into the receptacle, it shall be capable of maintaining the optical datum target of both the fibre and the receptacle within the clearances specified in Table 29 depending upon the application.

Documents
Document Sharing Hub
Full document details: IEC 61754-6 2022 RLV

Table 29 – Mechanical stop feature grade

Grade	Dimensions mm		Dimensions µm	Notes
	OA **minimum**	***OA*** **maximum**	***OD*** **clearance**	
A	0,3	0,4	±5	
N	0,3	1,251	–	

Figure 15 is an example of the 4,5 mm duplex active device receptacle interface. Table 30 gives dimensions of the 4,5 mm duplex active device receptacle interface and Table 31 gives alignment feature of the 4,5 mm duplex active device receptacle interface.

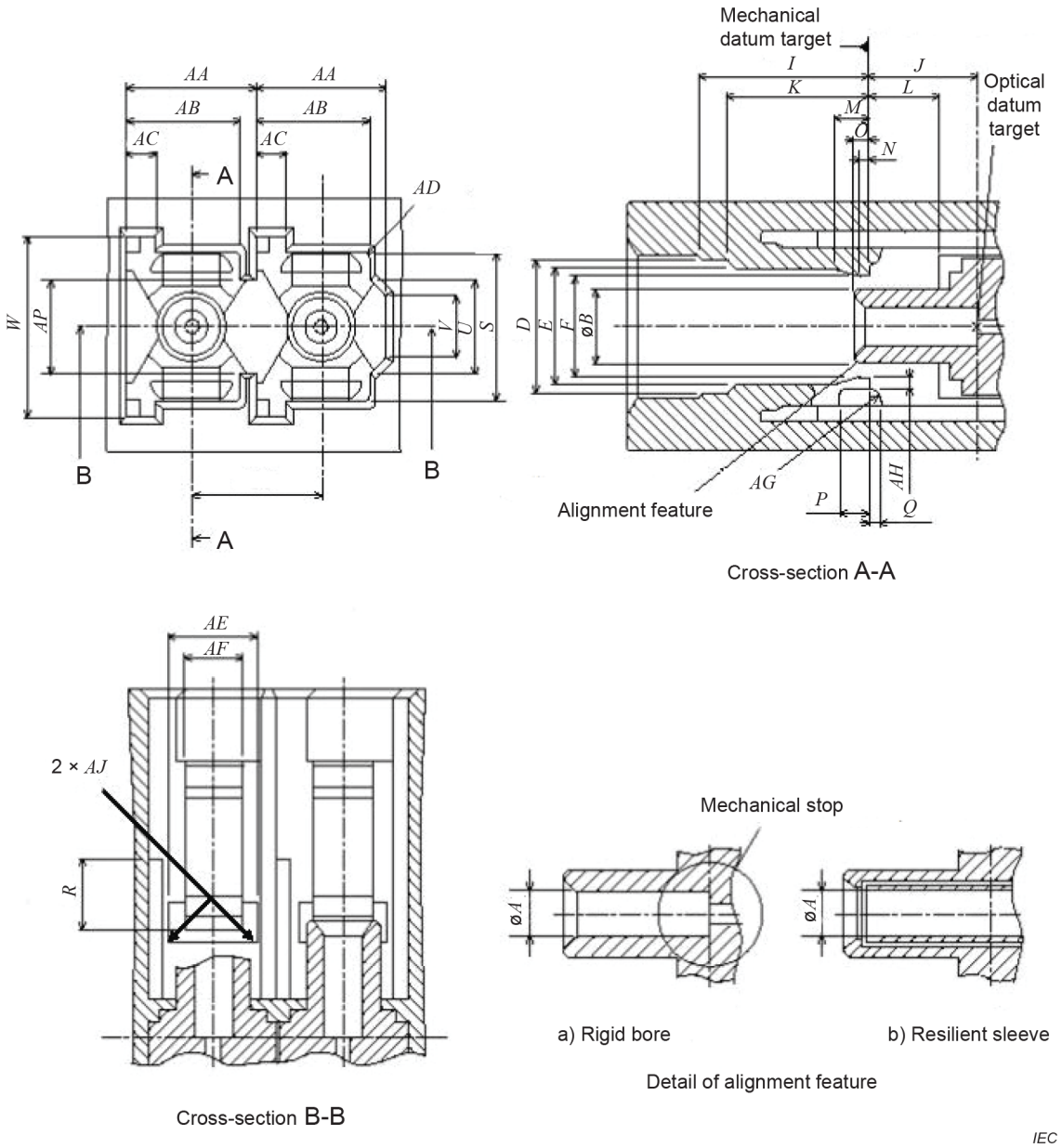

Figure 15 – 4,5 mm duplex active device receptacle interface

Documents
Document Sharing Hub
Full document details: IEC 61754-6 2022 RLV