IEC 61754-7-3

Edition 1.0 2019-04

INTERNATIONAL STANDARD

NORME INTERNATIONALE

Fibre optic interconnecting devices and passive components – Fibre optic connector interfaces –
Part 7-3: Type MPO connector family –Two fibre rows 16 fibre wide

Dispositifs d'interconnexion et composants passifs àfibres optiques – Interfaces de connecteurs à fibres optiques –
Partie 7-3: Famille de connecteurs de type MPO – Deux rangées de 16 fibres

IEC 61754-7-3:2019-04(en-fr)

Documents
Document Sharing Hub

Full document details: IEC 61754-7-3-2019

THIS PUBLICATION IS COPYRIGHT PROTECTED
Copyright © 2019 IEC, Geneva, Switzerland

All rights reserved. Unless otherwise specified, no part of this publication may be reproduced or utilized in any form or by any means, electronic or mechanical, including photocopying and microfilm, without permission in writing from either IEC or IEC's member National Committee in the country of the requester. If you have any questions about IEC copyright or have an enquiry about obtaining additional rights to this publication, please contact the address below or your local IEC member National Committee for further information.

Droits de reproduction réservés. Sauf indication contraire, aucune partie de cette publication ne peut être reproduite ni utilisée sous quelque forme que ce soit et par aucun procédé, électronique ou mécanique, y compris la photocopie et les microfilms, sans l'accord écrit de l'IEC ou du Comité national de l'IEC du pays du demandeur. Si vous avez des questions sur le copyright de l'IEC ou si vous désirez obtenir des droits supplémentaires sur cette publication, utilisez les coordonnées ci-après ou contactez le Comité national de l'IEC de votre pays de résidence.

IEC Central Office
3, rue de Varembé
CH-1211 Geneva 20
Switzerland

Tel.: +41 22 919 02 11
info@iec.ch
www.iec.ch

About the IEC
The International Electrotechnical Commission (IEC) is the leading global organization that prepares and publishes International Standards for all electrical, electronic and related technologies.

About IEC publications
The technical content of IEC publications is kept under constant review by the IEC. Please make sure that you have the latest edition, a corrigendum or an amendment might have been published.

IEC publications search - webstore.iec.ch/advsearchform
The advanced search enables to find IEC publications by a variety of criteria (reference number, text, technical committee,…). It also gives information on projects, replaced and withdrawn publications.

IEC Just Published - webstore.iec.ch/justpublished
Stay up to date on all new IEC publications. Just Published details all new publications released. Available online and once a month by email.

IEC Customer Service Centre - webstore.iec.ch/csc
If you wish to give us your feedback on this publication or need further assistance, please contact the Customer Service Centre: sales@iec.ch.

Electropedia - www.electropedia.org
The world's leading online dictionary on electrotechnology, containing more than 22 000 terminological entries in English and French, with equivalent terms in 16 additional languages. Also known as the International Electrotechnical Vocabulary (IEV) online.

IEC Glossary - std.iec.ch/glossary
67 000 electrotechnical terminology entries in English and French extracted from the Terms and Definitions clause of IEC publications issued since 2002. Some entries have been collected from earlier publications of IEC TC 37, 77, 86 and CISPR.

A propos de l'IEC
La Commission Electrotechnique Internationale (IEC) est la première organisation mondiale qui élabore et publie des Normes internationales pour tout ce qui a trait à l'électricité, à l'électronique et aux technologies apparentées.

A propos des publications IEC
Le contenu technique des publications IEC est constamment revu. Veuillez vous assurer que vous possédez l'édition la plus récente, un corrigendum ou amendement peut avoir été publié.

Recherche de publications IEC - webstore.iec.ch/advsearchform
La recherche avancée permet de trouver des publications IEC en utilisant différents critères (numéro de référence, texte, comité d'études,…). Elle donne aussi des informations sur les projets et les publications remplacées ou retirées.

IEC Just Published - webstore.iec.ch/justpublished
Restez informé sur les nouvelles publications IEC. Just Published détaille les nouvelles publications parues. Disponible en ligne et une fois par mois par email.

Service Clients - webstore.iec.ch/csc
Si vous désirez nous donner des commentaires sur cette publication ou si vous avez des questions contactez-nous: sales@iec.ch.

Electropedia - www.electropedia.org
Le premier dictionnaire d'électrotechnologie en ligne au monde, avec plus de 22 000 articles terminologiques en anglais et en français, ainsi que les termes équivalents dans 16 langues additionnelles. Egalement appelé Vocabulaire Electrotechnique International (IEV) en ligne.

Glossaire IEC - std.iec.ch/glossary
67 000 entrées terminologiques électrotechniques, en anglais et en français, extraites des articles Termes et Définitions des publications IEC parues depuis 2002. Plus certaines entrées antérieures extraites des publications des CE 37, 77, 86 et CISPR de l'IEC.

Documents
Document Sharing Hub

Full document details: IEC 61754-7-3-2019

IEC 61754-7-3

Edition 1.0 2019-04

INTERNATIONAL STANDARD

NORME INTERNATIONALE

Fibre optic interconnecting devices and passive components – Fibre optic connector interfaces –
Part 7-3: Type MPO connector family –Two fibre rows 16 fibre wide

Dispositifs d'interconnexion et composants passifs àfibres optiques – Interfaces de connecteurs à fibres optiques –
Partie 7-3: Famille de connecteurs de type MPO – Deux rangées de 16 fibres

INTERNATIONAL
ELECTROTECHNICAL
COMMISSION

COMMISSION
ELECTROTECHNIQUE
INTERNATIONALE

ICS 33.180.20

ISBN 978-2-8322-6714-1

Warning! Make sure that you obtained this publication from an authorized distributor.
Attention! Veuillez vous assurer que vous avez obtenu cette publication via un distributeur agréé.

® Registered trademark of the International Electrotechnical Commission
Marque déposée de la Commission Electrotechnique Internationale

Documents
Document Sharing Hub

Full document details: IEC 61754-7-3-2019

CONTENTS

FOREWORD 3
INTRODUCTION 5
1 Scope 6
2 Normative references 6
3 Terms and definitions 6
4 Description 6
5 Interfaces 7

Figure 1 – MPO connector configurations 7
Figure 2 – Optical datum target location diagrams 8
Figure 3 – Gauge pin 8
Figure 4 – Gauge for plug 9
Figure 5 – MPO female plug, down-angled interface 10
Figure 6 – MPO female plug, up-angled interface 10
Figure 7 – MPO male plug, down-angled interface 12
Figure 8 – MPO male plug, up-angled interface 13
Figure 9 – MPO female plug, flat interface 15
Figure 10 – MPO male plug, flat interface 17
Figure 11 – MPO adaptor interface, opposed keyway configuration 19
Figure 12 – MPO adaptor interface, aligned keyway configuration 21
Figure 13 – MPO active device receptacle, angled interface 23
Figure 14 – MPO active device receptacle, flat interface 25

Table 1 – Intermateability between plugs and adaptors/housings/receptacles 7
Table 2 – Dimensions of the gauge pin 8
Table 3 – Dimensionsof the gauge for plug 9
Table 4 – Dimensions of the MPO female plug, down- or up-angled interface 11
Table 5 – Dimensions of the MPO male plug, down- or up-angled interface 13
Table 6 – Dimensions of the MPO female plug, flat interface 16
Table 7 – Dimensions of the MPO male plug, flat interface 18
Table 8 – Dimensions of the MPO adaptor interface, opposed keyway configuration 20
Table 9 – Dimensions of the MPO adaptor interface, aligned keyway configuration 22
Table 10 – Dimensions of the MPO active device receptacle, angled interface 24
Table 11 – Dimensions of the MPO active device receptacle, flat interface 26

Documents
Document Sharing Hub

Full document details: IEC 61754-7-3-2019

INTERNATIONAL ELECTROTECHNICAL COMMISSION

FIBRE OPTIC INTERCONNECTING DEVICES AND PASSIVE COMPONENTS – FIBRE OPTIC CONNECTOR INTERFACES –

Part 7-3: Type MPO connector family – Two fibre rows 16 fibre wide

FOREWORD

1) The International Electrotechnical Commission (IEC) is a worldwide organization for standardization comprising all national electrotechnical committees (IEC National Committees). The object of IEC is to promote international co-operation on all questions concerning standardization in the electrical and electronic fields. To this end and in addition to other activities, IEC publishes International Standards, Technical Specifications, Technical Reports, Publicly Available Specifications (PAS) and Guides (hereafter referred to as "IEC Publication(s)"). Their preparation is entrusted to technical committees; any IEC National Committee interested in the subject dealt with may participate in this preparatory work. International, governmental and non-governmental organizations liaising with the IEC also participate in this preparation. IEC collaborates closely with the International Organization for Standardization (ISO) in accordance with conditions determined by agreement between the two organizations.
2) The formal decisions or agreements of IEC on technical matters express, as nearly as possible, an international consensus of opinion on the relevant subjects since each technical committee has representation from all interested IEC National Committees.
3) IEC Publications have the form of recommendations for international use and are accepted by IEC National Committees in that sense. While all reasonable efforts are made to ensure that the technical content of IEC Publications is accurate, IEC cannot be held responsible for the way in which they are used or for any misinterpretation by any end user.
4) In order to promote international uniformity, IEC National Committees undertake to apply IEC Publications transparently to the maximum extent possible in their national and regional publications. Any divergence between any IEC Publication and the corresponding national or regional publication shall be clearly indicated in the latter.
5) IEC itself does not provide any attestation of conformity. Independent certification bodies provide conformity assessment services and, in some areas, access to IEC marks of conformity. IEC is not responsible for any services carried out by independent certification bodies.
6) All users should ensure that they have the latest edition of this publication.
7) No liability shall attach to IEC or its directors, employees, servants or agents including individual experts and members of its technical committees and IEC National Committees for any personal injury, property damage or other damage of any nature whatsoever, whether direct or indirect, or for costs (including legal fees) and expenses arising out of the publication, use of, or reliance upon, this IEC Publication or any other IEC Publications.
8) Attention is drawn to the Normative references cited in this publication. Use of the referenced publications is indispensable for the correct application of this publication.
9) Attention is drawn to the possibility that some of the elements of this IEC Publication may be the subject of patent rights. IEC shall not be held responsible for identifying any or all such patent rights.

International Standard IEC 61754-7-3 has been prepared by subcommittee 86B: Fibre optic interconnecting devices and passive components, of IEC technical committee 86: Fibre optics.

The text of this International Standard is based on the following documents:

FDIS	Report on voting
86B/4176/FDIS	86B/4190/RVD

Full information on the voting for the approval of this International Standard can be found in the report on voting indicated in the above table.

This document has been drafted in accordance with the ISO/IEC Directives, Part 2.

Documents
Document Sharing Hub

Full document details: IEC 61754-7-3-2019

A list of all parts in the IEC 61754 series, published under the general title *Fibre optic interconnecting devices and passive components – Fibre optic connector interfaces*, can be found on the IEC website.

The committee has decided that the contents of this document will remain unchanged until the stability date indicated on the IEC website under "http://webstore.iec.ch" in the data related to the specific document. At this date, the document will be

- reconfirmed,
- withdrawn,
- replaced by a revised edition, or
- amended.

Documents
Document Sharing Hub

Full document details: IEC 61754-7-3-2019

INTRODUCTION

The International Electrotechnical Commission (IEC) draws attention to the fact that it is claimed that compliance with this document may involve the use of patents concerning MPO connectors.

The IEC takes no position concerning the evidence, validity and scope of this patent right.

The holders of these patent rights have assured the IEC that they are willing to negotiate licences under reasonable and non-discriminatory terms and conditions with applicants throughout the world. In this respect, the statement of the holders of these patent rights is registered with the IEC. Information may be obtained from:

Intellectual Property Department,
NTT Nippon Telegraph and Telephone Corporation,
3-19-2, Nishishinjuku, Shinjuku-ku
JP – Tokyo 163-19

Assistant Secretary
Laura Thomas
CommScope, Inc. of North Carolina
Hickory, North Carolina, USA

Attention is drawn to the possibility that some of the elements of this document may be the subject of patent rights other than those identified above. IEC shall not be held responsible for identifying any or all such patent rights.

ISO (www.iso.org/patents) and IEC (http://patents.iec.ch) maintain on-line data bases of patents relevant to their standards. Users are encouraged to consult the data bases for the most up to date information concerning patents.

Documents
Document Sharing Hub

Full document details: IEC 61754-7-3-2019

FIBRE OPTIC INTERCONNECTING DEVICES AND PASSIVE COMPONENTS – FIBRE OPTIC CONNECTOR INTERFACES –

Part 7-3: Type MPO connector family – Two fibre rows 16 fibre wide

1 Scope

This part of IEC 61754 defines the standard interface dimensions for type MPO family of connectors with two rows of 16 fibres.

2 Normative references

There are no normative references in this document.

3 Terms and definitions

No terms and definitions are listed in this document.

ISO and IEC maintain terminological databases for use in standardization at the following addresses:

- IEC Electropedia: available at http://www.electropedia.org/
- ISO Online browsing platform: available at http://www.iso.org/obp

4 Description

The parent connector for type MPO connector family is a multiway plug characterized by a rectangular ferrule normally 6,4 mm × 2,5 mm which utilizes two pins of 0,55 mm diameter as its alignment. The variant in this document provides a joint of 32 fibres by arraying them between two pin-positioning holes in the ferrule in a two-layer (two-row) arrangement. The connector includes a push-pull coupling mechanism and a ferrule spring loaded in the direction of the optical axis. The connector has a single male key which may be used to orient and limit the relative position between the connector and the component to which it is mated.

Connector interfaces are configured using a female plug without pins, a male plug with pins fixed and an adaptor as shown in Figure 1. The female plug is intermateable with the male plug. There are two angled-interface plugs, one called down-angled and the other up-angled. They are defined for both male and female plugs. The up and down descriptors refer to the tilt direction of the ferrule's angled end-face relative to the fibre axis when looking toward the end-face with the plug's key feature on the top. For down-angled plugs, the angled surface faces slightly downward. For up-angled plugs, the angled surface faces slightly upward. These different angles affect intermateability for the two adaptor types. An opposed keyway adaptor mates two plugs with the keys in opposite orientations, for example one side keyway-up and the other keyway-down. In contrast, an aligned keyway adaptor mates two plugs with the keys at the same orientation. When using an opposed keyway adaptor with angled interfaces, two down-angled plugs or two up-angled plugs shall be connected. For aligned keyway adaptors with angled interfaces, one down-angled plug and one up-angled plug shall be connected.

Additionally, the female plug interface is intermateable with the active device receptacle.

AVA Documents
Document Sharing Hub

Full document details: IEC 61754-7-3-2019

5 Interfaces

This document contains the following standard interfaces:

Interface IEC 61754-7-3-1: MPO female plug, down-angled interface for 32 fibres
Interface IEC 61754-7-3-2: MPO male plug, down-angled interface for 32 fibres
Interface IEC 61754-7-3-3: MPO female plug, up-angled interface for 32 fibres
Interface IEC 61754-7-3-4: MPO male plug, up-angled interface for 32 fibres
Interface IEC 61754-7-3-5: MPO female plug, flat interface for 32 fibres
Interface IEC 61754-7-3-6: MPO male plug, flat interface for 32 fibres
Interface IEC 61754-7-3-7: MPO adaptor interface – Opposed keyway configuration
Interface IEC 61754-7-3-8: MPO adaptor interface – Aligned keyway configuration
Interface IEC 61754-7-3-9: MPO active device receptacle, angled interface for 32 fibres
Interface IEC 61754-7-3-10: MPO active device receptacle, flat interface for 32 fibres

The interfaces are intermateable according to Table 1.

Table 1 – Intermateability between plugs and adaptors/housings/receptacles

Female plugs	Adaptors/housings/receptacles	Male plugs
IEC 61754-7-3-1	IEC 61754-7-3-7	IEC 61754-7-3-2
IEC 61754-7-3-1	IEC 61754-7-3-8	IEC 61754-7-3-4
IEC 61754-7-3-3	IEC 61754-7-3-8	IEC 61754-7-3-2
IEC 61754-7-3-5	IEC 61754-7-3-7 or 61754-7-3-8	IEC 61754-7-3-6
IEC 61754-7-3-1	IEC 61754-7-3-9	N/A
IEC 61754-7-3-5	IEC 61754-7-3-10	N/A

Figure 1 shows MPO connector configurations.

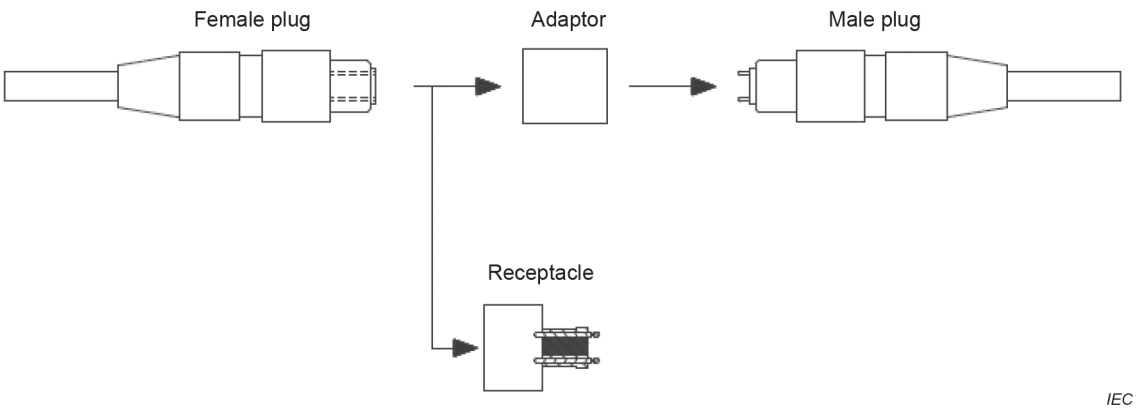

Figure 1 – MPO connector configurations

Figure 2 shows optical datum target location diagrams. Figure 3 shows the gauge pin and dimensions are given in Table 2.

Documents
Document Sharing Hub
Full document details: IEC 61754-7-3-2019

Dimensions in millimetres

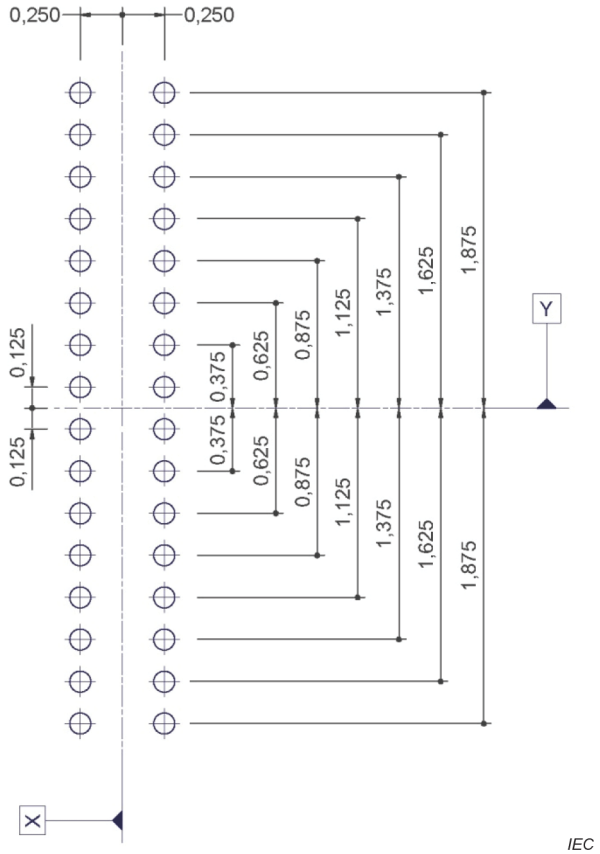

Figure 2 – Optical datum target location diagrams

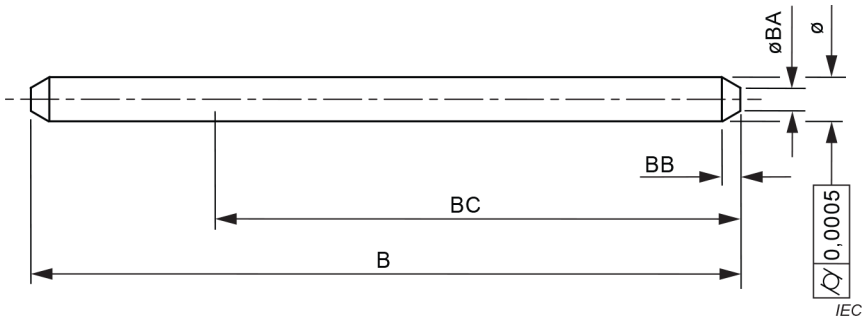

Figure 3 – Gauge pin

Table 2 – Dimensions of the gauge pin

Reference	Dimensions mm	
	Minimum	Maximum
A[1]	0,548 5	0,549 0
B	10,8	11,2
BA	0,2	0,4
BB	0,2	0,5
BC	6,0	–

[1] Surface roughness R_z = 0,1 µm for the length of dimension BC.

Documents
Document Sharing Hub
Full document details: IEC 61754-7-3-2019

Figure 4 shows gauge for plug and its dimensions are given in Table 3.

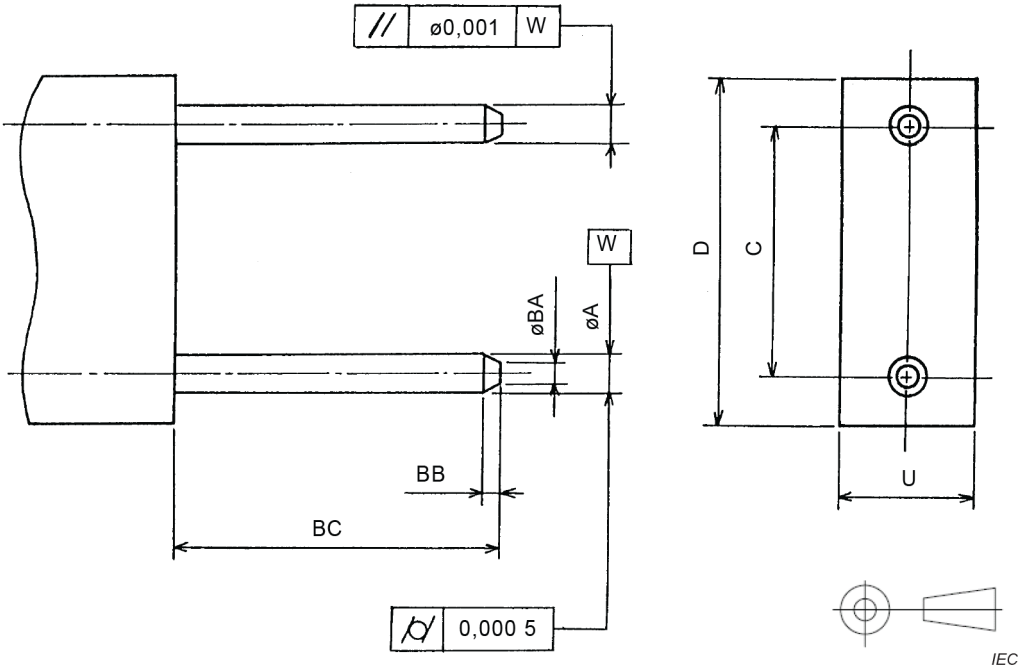

Figure 4 – Gauge for plug

Table 3 – Dimensionsof the gauge for plug

Reference	Dimensions mm	
	Minimum	**Maximum**
A[1]	0,548 5	0,549 0
C	5,299 5	5,300 5
D	6,3	6,5
U	2,4	2,5
BA	0,2	0,4
BB	0,2	0,5
BC	6,0	6,5

[1] For two pins, surface roughness R_z = 0,1 µm.

Figures 5 and 6 show the down-angled and up-angled interface of the MPO female plug. Table 4 gives the dimensions of the down- or up-angled interfaces of the MPO female plug.

Documents
Document Sharing Hub
Full document details: IEC 61754-7-3-2019

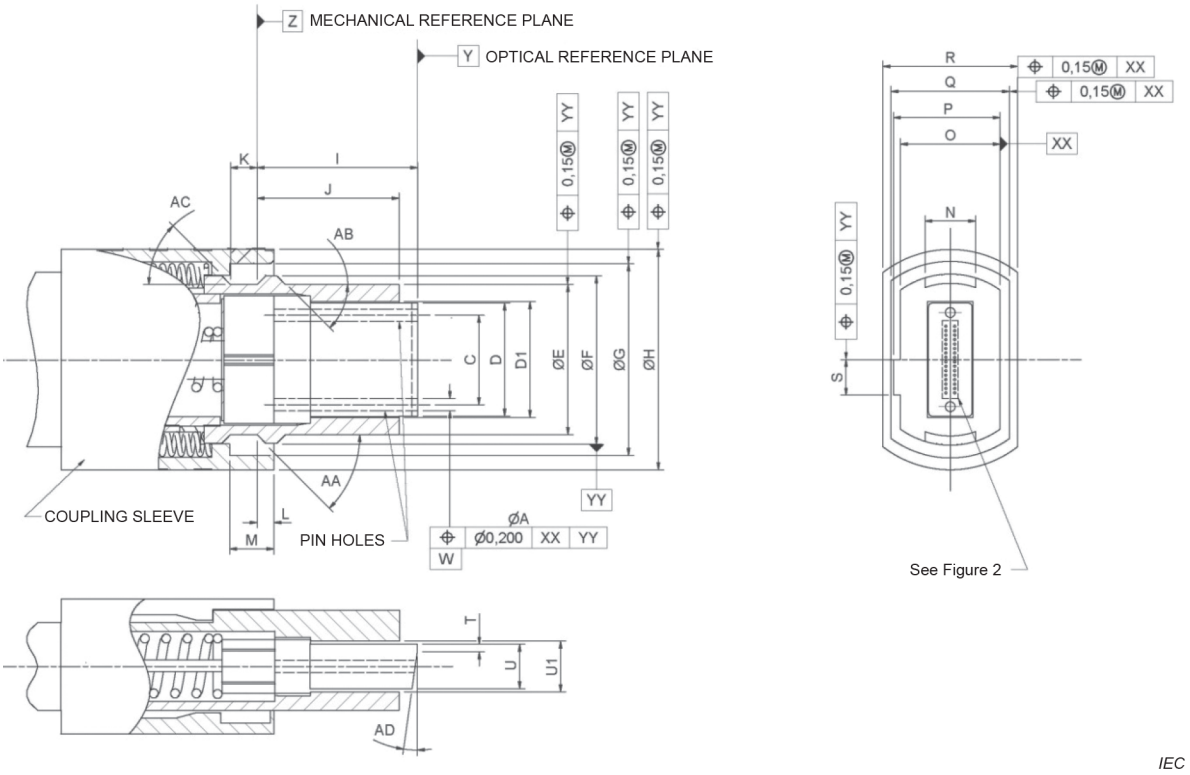

Figure 5 – MPO female plug, down-angled interface

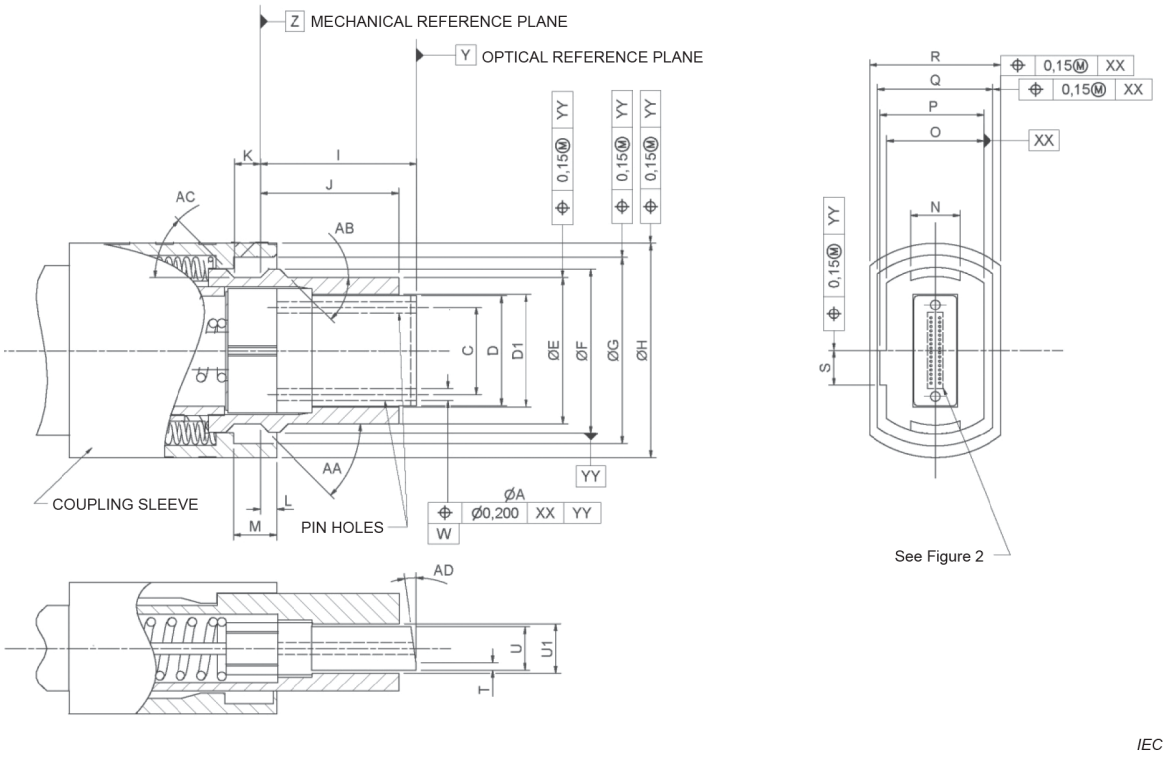

Figure 6 – MPO female plug, up-angled interface

Documents
Document Sharing Hub
Full document details: IEC 61754-7-3-2019

Table 4 – Dimensions of the MPO female plug, down- or up-angled interface

Reference	Dimensions mm (unless otherwise noted)	
	Minimum	**Maximum**
A[a]	0,549	0,551
C[b]	5,297	5,303
D	6,3	6,5
D1[c]	6,7	–
E	8,34	8,54
F	9,49	9,59
G	10,85	11,05
H	12,19	12,59
I[d,e]	8,8	9,2
J	7,9	8,1
K	1,4	–
L[f,g]	0,2	0,8
M	2,4	2,6
N	2,8	3,0
O	4,89	4,99
P	5,39	5,49
Q	5,7	–
R	–	7,7
S	2,2	2,3
T	–	0,6
U	2,4	2,5
U1[c]	2,7	–
AA	42°	45°
AB	–	45°
AC	–	45°
AD[h,i]	7,5°	8,5°
The mating/unmating force between an MPO connector and adaptor shall not exceed 40,0 N.		

[a] Each pin-hole shall accept a gauge pin as shown in Figure 3 to a depth of 5,5 mm with a maximum force of 1,7 N. In addition, two pin-holes of a plug shall accept a gauge as shown in Figure 4 to a depth of 5,5 mm with a maximum force of 3,4 N.

[b] Dimension C is defined as the distance between two pin-hole centres.

[c] Dimensions D1 and U1 are defined only at the end of the connector as shown.

[d] Dimension I is given for a fibre end face centre of a plug end when not mated. It is noticed that a ferrule is movable by a certain axial compression force, and therefore dimension I is variable. Ferrule compression force shall be 18,0 N to 22,0 N when the position of the fibre end face from datum Z is in the range of 8,2 mm to 8,4 mm.

[e] Dimension I is measured at the centre line between the two pin-hole centres.

[f] The coupling sleeve shall be movable by a certain axial compression force. Dimension L is given for a coupling sleeve end when not mated. Coupling sleeve compression force shall be 2,9 N to 6,9 N when the position of the coupling sleeve end face from datum Z is in the range of 0 mm to 0,1 mm to the right or to the left of datum Z.

[g] An adaptor coupling part shall be unlocked by a left-direction movement of a coupling sleeve. When the coupling sleeve is moved for unlocking, the position of the coupling sleeve end face shall be larger than 2,0 mm in the left direction from datum Z.

[h] The down-angled and up-angled plugs shall be clearly marked to distinguish them from each other and flat interfaces through the use of colour, labelling, or other appropriate identification method. This identification method shall be visible when the plug is in the mated or unmated condition.

[i] Since angled MPO connectors require a Y-offset of the fibre holes in relation to the guide pin holes, and the Y-offset is referenced from the epoxy window of the ferrule, the angle shall be polished as a down-angle from the epoxy window. The orientation of the ferrule epoxy window may be reversed in the MPO connector to produce the up-angle variant.

AVA Documents
Document Sharing Hub

Full document details: IEC 61754-7-3-2019

Figures 7 and 8 show the down-angled and up-angled interface of the MPO male plug. Table 5 gives the dimensions of the down- or up-angled interfaces of the MPO male plug.

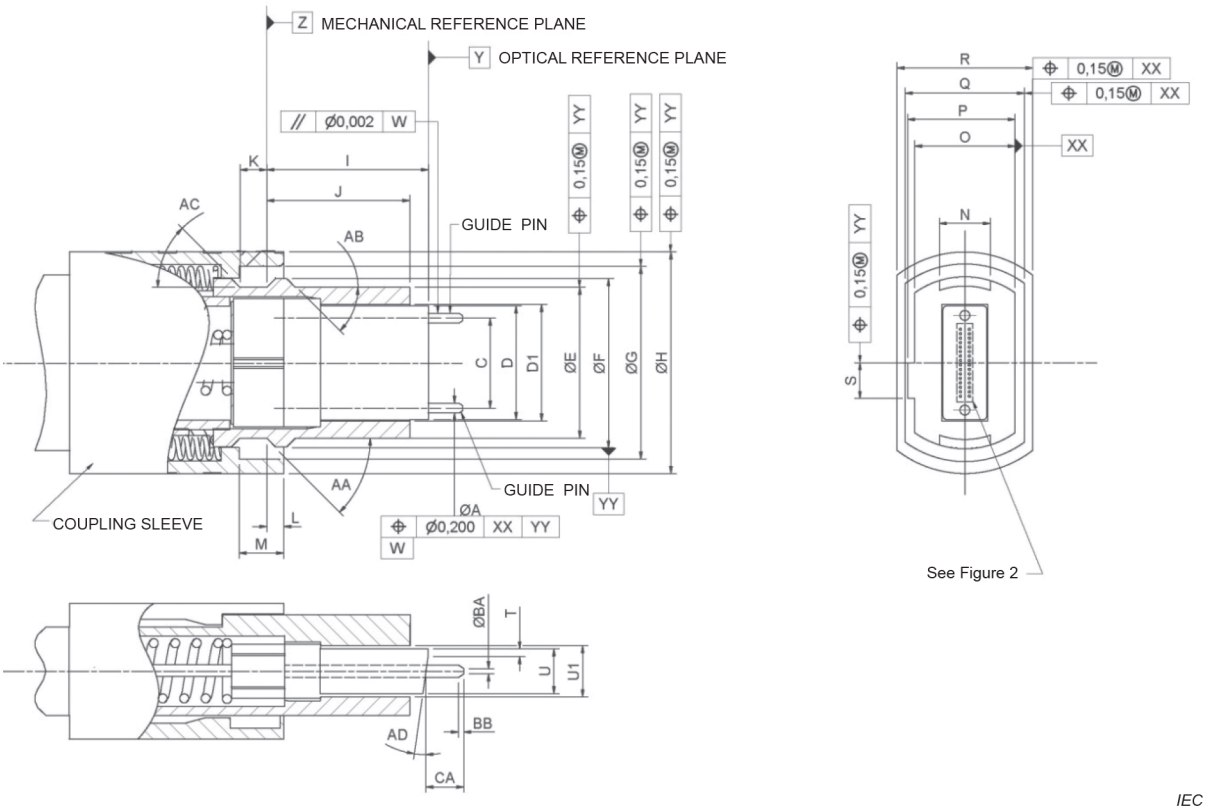

Figure 7 – MPO male plug, down-angled interface

Documents
Document Sharing Hub
Full document details: IEC 61754-7-3-2019

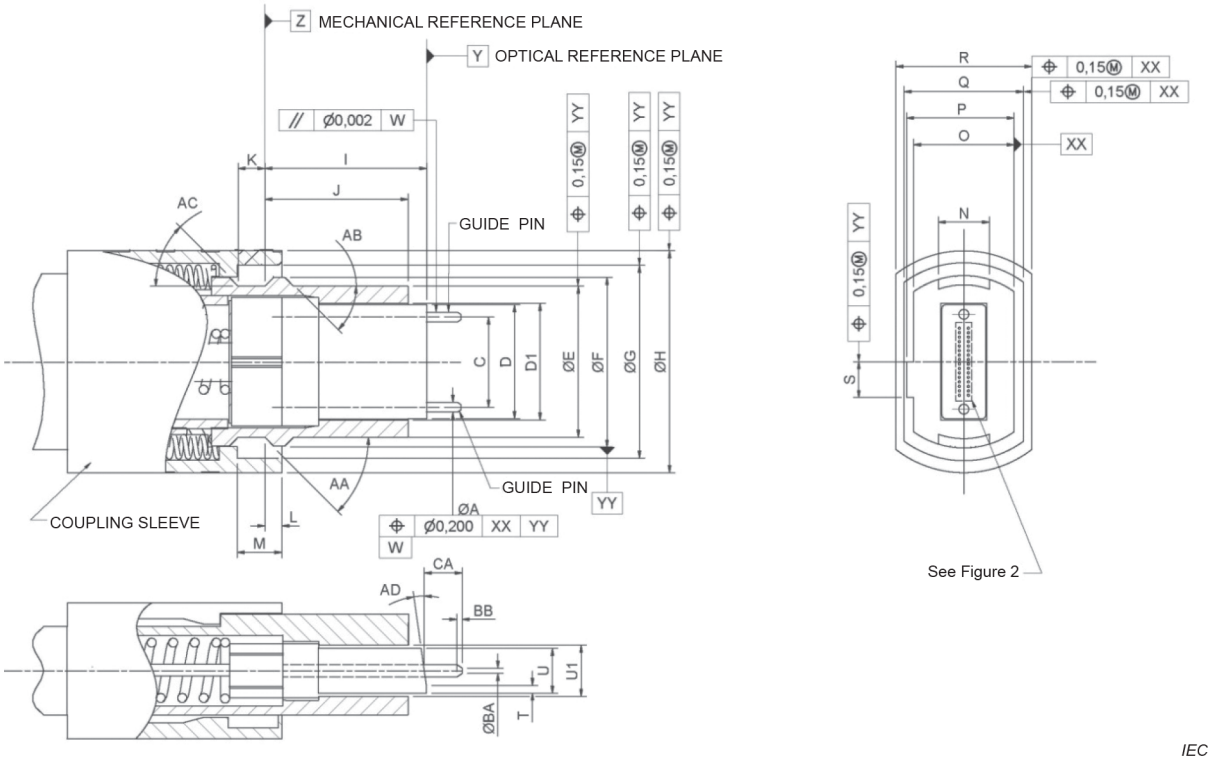

Figure 8 – MPO male plug, up-angled interface

Table 5 – Dimensions of the MPO male plug, down- or up-angled interface

Reference	Dimensions mm (unless otherwise noted)	
	Minimum	**Maximum**
A[a]	0,547	0,549
C[b]	5,297	5,303
D	6,3	6,5
D1[c]	6,7	–
E	8,34	8,54
F	9,49	9,59
G	10,85	11,05
H	12,19	12,59
I[d,e]	8,8	9,2
J	7,9	8,1
K	1,4	–
L[f,g]	0,2	0,8
M	2,4	2,6
N	2,8	3,0
O	4,89	4,99
P	5,39	5,49
Q	5,7	–
R	–	7,7
S	2,2	2,3
T	–	0,6
U	2,4	2,5
U1[c]	2,7	–
AA	42°	45°
AB	–	45°
AC	–	45°
AD[h,i]	7,5°	8,5°

Documents
Document Sharing Hub

Reference	Dimensions mm (unless otherwise noted)	
	Minimum	**Maximum**
BA[j]	0,2	0,4
BB	0,2	0,5
CA	1,6	3,3
The mating/unmating force between an MPO connector and adaptor shall not exceed 40,0 N.		

[a] Each guide pin shall be retained with a minimum force of 19,6 N. Surface roughness R_z shall be below 0,5 µm.

[b] Dimension C is defined as the distance between two pin-hole centres.

[c] Dimensions D1 and U1 are defined only at the end of the connector as shown.

[d] Dimension I is given for a fibre end face centre of a plug end when not mated. It is noticed that a ferrule is movable by a certain axial compression force, and therefore dimension I is variable. Ferrule compression force shall be 18,0 N to 22,0 N when the position of the fibre end face from datum Z is in the range of 8,2 mm to 8,4 mm.

[e] Dimension I is measured at the centre line between the two pin-hole centres.

[f] The coupling sleeve shall be movable by a certain axial compression force. Dimension L is given for a coupling sleeve end when not mated. Coupling sleeve compression force shall be 2,9 N to 6,9 N when the position of the coupling sleeve end face from datum Z is in the range of 0 mm to 0,1 mm to the right or to the left of datum Z.

[g] An adaptor coupling part shall be unlocked by a left-direction movement of a coupling sleeve. When the coupling sleeve is moved for unlocking, the position of the coupling sleeve end face shall be larger than 2,0 mm in the left direction from datum Z.

[h] The down-angled and up-angled plugs shall be clearly marked to distinguish them from each other and flat interfaces through the use of colour, labelling, or other appropriate identification method. This identification method shall be visible when the plug is in the mated or unmated condition.

[j] Since angled MPO connectors require a Y-offset of the fibre holes in relation to the guide pin holes, and the Y-offset is referenced from the epoxy window of the ferrule, the angle shall be polished as a down-angle from the epoxy window. The orientation of the ferrule epoxy window may be reversed in the MPO connector to produce the up-angle variant.

AVA Documents
Document Sharing Hub

Full document details: IEC 61754-7-3-2019

Figure 9 shows MPO female plug, flat interface. Table 6 gives the dimensions of the MPO female plug, flat interface.

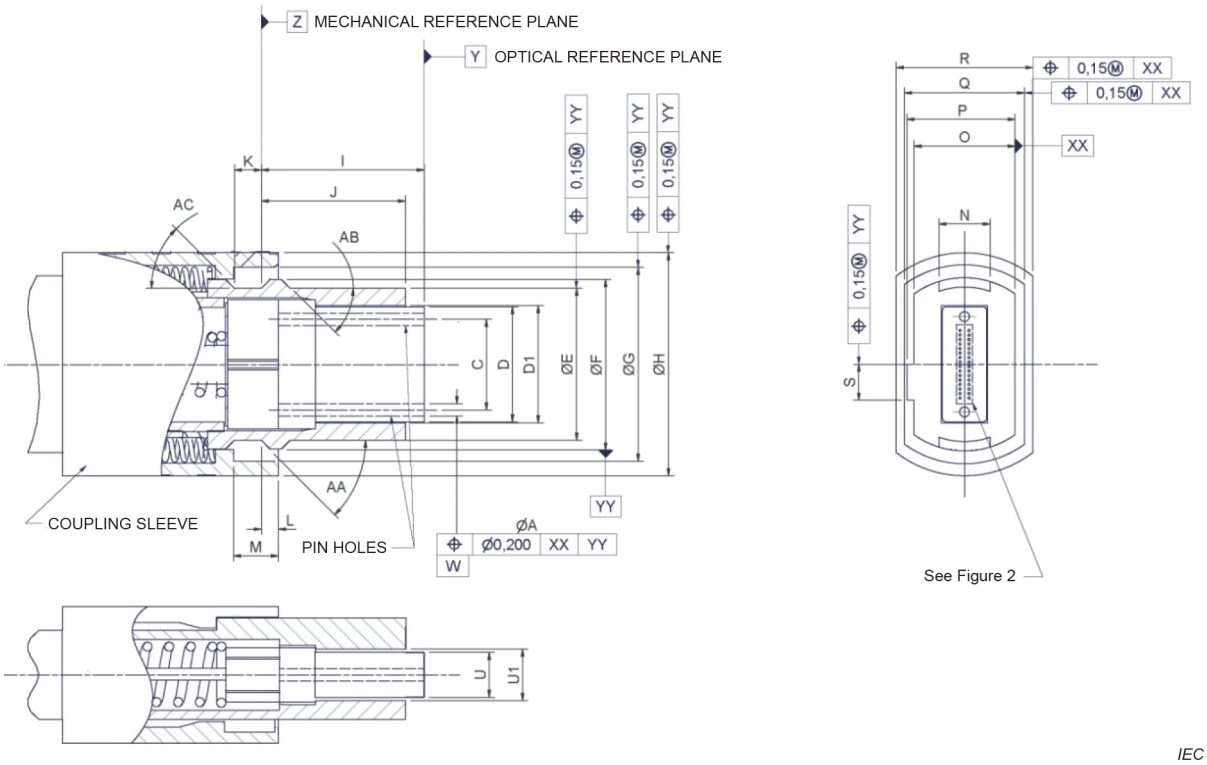

Figure 9 – MPO female plug, flat interface

Documents
Document Sharing Hub
Full document details: IEC 61754-7-3-2019