IEC 61755-3-1

Edition 2.0 2024-04

INTERNATIONAL STANDARD

NORME INTERNATIONALE

colour inside

Fibre optic interconnecting devices and passive components – Connector optical interfaces –
Part 3-1: Connector parameters of dispersion unshifted single-mode physically contacting fibres – Non-angled 2,5 mm and 1,25 mm diameter cylindrical full zirconia ferrules

Dispositifs d'interconnexion et composants passifs fibroniques – Interfaces optiques de connecteurs –
Partie 3-1 : Paramètres des connecteurs pour fibres unimodales à dispersion non décalée en contact physique – Ferrules cylindriques sans angle en zircone pleine de 2,5 mm et 1,25 mm de diamètre

IEC 61755-3-1:2024-04(en-fr)

Documents
Document Sharing Hub
Full document details: IEC 61755-3-1-2024

THIS PUBLICATION IS COPYRIGHT PROTECTED
Copyright © 2024 IEC, Geneva, Switzerland

All rights reserved. Unless otherwise specified, no part of this publication may be reproduced or utilized in any form or by any means, electronic or mechanical, including photocopying and microfilm, without permission in writing from either IEC or IEC's member National Committee in the country of the requester. If you have any questions about IEC copyright or have an enquiry about obtaining additional rights to this publication, please contact the address below or your local IEC member National Committee for further information.

Droits de reproduction réservés. Sauf indication contraire, aucune partie de cette publication ne peut être reproduite ni utilisée sous quelque forme que ce soit et par aucun procédé, électronique ou mécanique, y compris la photocopie et les microfilms, sans l'accord écrit de l'IEC ou du Comité national de l'IEC du pays du demandeur. Si vous avez des questions sur le copyright de l'IEC ou si vous désirez obtenir des droits supplémentaires sur cette publication, utilisez les coordonnées ci-après ou contactez le Comité national de l'IEC de votre pays de résidence.

IEC Secretariat
3, rue de Varembé
CH-1211 Geneva 20
Switzerland

Tel.: +41 22 919 02 11
info@iec.ch
www.iec.ch

About the IEC
The International Electrotechnical Commission (IEC) is the leading global organization that prepares and publishes International Standards for all electrical, electronic and related technologies.

About IEC publications
The technical content of IEC publications is kept under constant review by the IEC. Please make sure that you have the latest edition, a corrigendum or an amendment might have been published.

IEC publications search - webstore.iec.ch/advsearchform
The advanced search enables to find IEC publications by a variety of criteria (reference number, text, technical committee, …). It also gives information on projects, replaced and withdrawn publications.

IEC Just Published - webstore.iec.ch/justpublished
Stay up to date on all new IEC publications. Just Published details all new publications released. Available online and once a month by email.

IEC Customer Service Centre - webstore.iec.ch/csc
If you wish to give us your feedback on this publication or need further assistance, please contact the Customer Service Centre: sales@iec.ch.

IEC Products & Services Portal - products.iec.ch
Discover our powerful search engine and read freely all the publications previews, graphical symbols and the glossary. With a subscription you will always have access to up to date content tailored to your needs.

Electropedia - www.electropedia.org
The world's leading online dictionary on electrotechnology, containing more than 22 500 terminological entries in English and French, with equivalent terms in 25 additional languages. Also known as the International Electrotechnical Vocabulary (IEV) online.

A propos de l'IEC
La Commission Electrotechnique Internationale (IEC) est la première organisation mondiale qui élabore et publie des Normes internationales pour tout ce qui a trait à l'électricité, à l'électronique et aux technologies apparentées.

A propos des publications IEC
Le contenu technique des publications IEC est constamment revu. Veuillez vous assurer que vous possédez l'édition la plus récente, un corrigendum ou amendement peut avoir été publié.

Recherche de publications IEC - webstore.iec.ch/advsearchform
La recherche avancée permet de trouver des publications IEC en utilisant différents critères (numéro de référence, texte, comité d'études, …). Elle donne aussi des informations sur les projets et les publications remplacées ou retirées.

IEC Just Published - webstore.iec.ch/justpublished
Restez informé sur les nouvelles publications IEC. Just Published détaille les nouvelles publications parues. Disponible en ligne et une fois par mois par email.

Service Clients - webstore.iec.ch/csc
Si vous désirez nous donner des commentaires sur cette publication ou si vous avez des questions contactez-nous: sales@iec.ch.

IEC Products & Services Portal - products.iec.ch
Découvrez notre puissant moteur de recherche et consultez gratuitement tous les aperçus des publications, symboles graphiques et le glossaire. Avec un abonnement, vous aurez toujours accès à un contenu à jour adapté à vos besoins.

Electropedia - www.electropedia.org
Le premier dictionnaire d'électrotechnologie en ligne au monde, avec plus de 22 500 articles terminologiques en anglais et en français, ainsi que les termes équivalents dans 25 langues additionnelles. Egalement appelé Vocabulaire Electrotechnique International (IEV) en ligne.

Documents
Document Sharing Hub

Full document details: IEC 61755-3-1-2024

IEC 61755-3-1

Edition 2.0 2024-04

INTERNATIONAL STANDARD

NORME INTERNATIONALE

colour inside

Fibre optic interconnecting devices and passive components – Connector optical interfaces –
Part 3-1: Connector parameters of dispersion unshifted single-mode physically contacting fibres – Non-angled 2,5 mm and 1,25 mm diameter cylindrical full zirconia ferrules

Dispositifs d'interconnexion et composants passifs fibroniques – Interfaces optiques de connecteurs –
Partie 3-1 : Paramètres des connecteurs pour fibres unimodales à dispersion non décalée en contact physique – Ferrules cylindriques sans angle en zircone pleine de 2,5 mm et 1,25 mm de diamètre

INTERNATIONAL
ELECTROTECHNICAL
COMMISSION

COMMISSION
ELECTROTECHNIQUE
INTERNATIONALE

ICS 33.180.20

ISBN 978-2-8322-8584-8

Warning! Make sure that you obtained this publication from an authorized distributor.
Attention! Veuillez vous assurer que vous avez obtenu cette publication via un distributeur agréé.

AVA Documents
Document Sharing Hub

® Registered trademark of the International Electrotechnical Commission
Marque déposée de la Commission Electrotechnique Internationale

Full document details: IEC 61755-3-1-2024

CONTENTS

FOREWORD 3
1 Scope 6
2 Normative references 6
3 Terms and definitions 6
4 Description 6
5 Interface parameters 7
Annex A (informative) Maximum allowed spherical fibre undercut 12
Annex B (informative) Expected attenuation when mated to reference connector plugs 14
Annex C (informative) Guidance related to simulation of optical interface attenuation 15
Annex D (informative) Estimation of average fibre core eccentricity limits as a function of batch size 21
Bibliography 24

Figure 1 – Connector plug endface dimensions 8
Figure 2 – Geometric requirements for fibre core location after termination 8
Figure 3 – Ferrule dimensions 11
Figure A.1 – Allowable undercut as a function of endface radius and apex offset – 4,9 N minimum contact force 13
Figure A.2 – Allowable undercut as a function of endface radius and apex offset – 2,9 N minimum contact force 13
Figure C.1 – MFD distribution used in the design curve calculation 16
Figure C.2 – Resultant fibre core to ferrule eccentricity distribution for Grade B attenuation 17
Figure C.3 – Resultant fibre angle distribution for Grade B attenuation 17
Figure C.4 – Scatterplot of fibre core eccentricities for Grade B attenuation 19
Figure C.5 – Histogram indicating attenuation distribution of a Grade B optical interface, Variant 1 to Variant 2 20
Figure D.1 – Example histogram showing fibre core eccentricity mean distribution for Grade B Variant 1 interfaces with a batch size of 25 21
Figure D.2 – Illustrative run chart of fibre core eccentricity for different batch sizes which all conform to the mean and maximum limits 23

Table 1 – Optical interface parameter values for 2,5 mm diameter ferrule 9
Table 2 – Optical interface parameter values for 1,25 mm diameter ferrule 10
Table 3 – Optical interface parameter values for PC ferrules 11
Table B.1 – Descriptive statistics when performance grades are mated against a Grade R1 reference interface 14
Table C.1 – MFD and fibre core nominal index of refraction 16
Table D.1 – Maximum allowable average fibre core eccentricity limit for different batch sizes 22

Documents
Document Sharing Hub
Full document details: IEC 61755-3-1-2024

INTERNATIONAL ELECTROTECHNICAL COMMISSION

FIBRE OPTIC INTERCONNECTING DEVICES AND PASSIVE COMPONENTS – CONNECTOR OPTICAL INTERFACES –

Part 3-1: Connector parameters of dispersion unshifted single-mode physically contacting fibres – Non-angled 2,5 mm and 1,25 mm diameter cylindrical full zirconia ferrules

FOREWORD

1) The International Electrotechnical Commission (IEC) is a worldwide organization for standardization comprising all national electrotechnical committees (IEC National Committees). The object of IEC is to promote international co-operation on all questions concerning standardization in the electrical and electronic fields. To this end and in addition to other activities, IEC publishes International Standards, Technical Specifications, Technical Reports, Publicly Available Specifications (PAS) and Guides (hereafter referred to as "IEC Publication(s)"). Their preparation is entrusted to technical committees; any IEC National Committee interested in the subject dealt with may participate in this preparatory work. International, governmental and non-governmental organizations liaising with the IEC also participate in this preparation. IEC collaborates closely with the International Organization for Standardization (ISO) in accordance with conditions determined by agreement between the two organizations.
2) The formal decisions or agreements of IEC on technical matters express, as nearly as possible, an international consensus of opinion on the relevant subjects since each technical committee has representation from all interested IEC National Committees.
3) IEC Publications have the form of recommendations for international use and are accepted by IEC National Committees in that sense. While all reasonable efforts are made to ensure that the technical content of IEC Publications is accurate, IEC cannot be held responsible for the way in which they are used or for any misinterpretation by any end user.
4) In order to promote international uniformity, IEC National Committees undertake to apply IEC Publications transparently to the maximum extent possible in their national and regional publications. Any divergence between any IEC Publication and the corresponding national or regional publication shall be clearly indicated in the latter.
5) IEC itself does not provide any attestation of conformity. Independent certification bodies provide conformity assessment services and, in some areas, access to IEC marks of conformity. IEC is not responsible for any services carried out by independent certification bodies.
6) All users should ensure that they have the latest edition of this publication.
7) No liability shall attach to IEC or its directors, employees, servants or agents including individual experts and members of its technical committees and IEC National Committees for any personal injury, property damage or other damage of any nature whatsoever, whether direct or indirect, or for costs (including legal fees) and expenses arising out of the publication, use of, or reliance upon, this IEC Publication or any other IEC Publications.
8) Attention is drawn to the Normative references cited in this publication. Use of the referenced publications is indispensable for the correct application of this publication.
9) IEC draws attention to the possibility that the implementation of this document may involve the use of (a) patent(s). IEC takes no position concerning the evidence, validity or applicability of any claimed patent rights in respect thereof. As of the date of publication of this document, IEC had not received notice of (a) patent(s), which may be required to implement this document. However, implementers are cautioned that this may not represent the latest information, which may be obtained from the patent database available at https://patents.iec.ch. IEC shall not be held responsible for identifying any or all such patent rights.

IEC 61755-3-1 has been prepared by subcommittee 86B: Fibre optic interconnecting devices and passive components, of IEC technical committee 86: Fibre Optics. It is an International Standard.

This second edition cancels and replaces the first edition published in 2006. This edition constitutes a technical revision.

Documents
Document Sharing Hub

Full document details: IEC 61755-3-1-2024

This edition includes the following significant technical changes with respect to the previous edition:

a) normative references have been added;

b) the introduction of an additional optical interface with a different fibre core eccentricity profile. The previous revision of optical interface standard is named "Variant 1: with fibre core axis oriented towards the connector guide key". The additional optical interface is named "Variant 2: with fibre core axis not oriented towards the connector guide key";

c) statements added related to interoperability, where both variants remain intermateable within a given performance grade and backwards compatible to IEC 61755-3-1:2006;

d) The addition of Grade B and Grade C interface requirements for both variants;

e) The addition of a descriptive statistic for the mean fibre core eccentricity (mean value) to describe the distribution of fibre core eccentricity to ensure interoperability;

f) A new informative Annex B to give guidance on the expected attenuation when mated to a reference connector plug;

g) A new informative Annex C to give guidance related to the simulation of optical interface attenuation;

h) A new informative Annex D to give guidance related to estimation of mean fibre eccentricity limits for finite production batch sizes.

The text of this International Standard is based on the following documents:

Draft	Report on voting
86B/4863/FDIS	86B/4889/RVD

Full information on the voting for its approval can be found in the report on voting indicated in the above table.

The language used for the development of this International Standard is English.

This document was drafted in accordance with ISO/IEC Directives, Part 2, and developed in accordance with ISO/IEC Directives, Part 1 and ISO/IEC Directives, IEC Supplement, available at www.iec.ch/members_experts/refdocs. The main document types developed by IEC are described in greater detail at www.iec.ch/publications.

A list of all parts of the IEC 61755 series, published under the general title *Fibre optic interconnecting devices and passive components – Connector optical interfaces for single-mode fibres*, can be found on the IEC website.

Future documents in this series will carry the new general title as cited above. Titles of existing documents in this series will be updated at the time of the next edition.

Documents
Document Sharing Hub

Full document details: IEC 61755-3-1-2024

The committee has decided that the contents of this document will remain unchanged until the stability date indicated on the IEC website under webstore.iec.ch in the data related to the specific document. At this date, the document will be

- reconfirmed,
- withdrawn, or
- revised.

IMPORTANT – The "colour inside" logo on the cover page of this document indicates that it contains colours which are considered to be useful for the correct understanding of its contents. Users should therefore print this document using a colour printer.

Documents
Document Sharing Hub

Full document details: IEC 61755-3-1-2024

FIBRE OPTIC INTERCONNECTING DEVICES AND PASSIVE COMPONENTS – CONNECTOR OPTICAL INTERFACES –

Part 3-1: Connector parameters of dispersion unshifted single-mode physically contacting fibres – Non-angled 2,5 mm and 1,25 mm diameter cylindrical full zirconia ferrules

1 Scope

This part of IEC 61755 defines the dimensional limits of the optical interface that are necessary for single-mode fibre optic connectors with 2,5 mm or 1,25 mm diameter cylindrical zirconia (ZrO_2) ferrules to meet the specific requirements for fibre-to-fibre interconnection, as defined in IEC 61755-2-1.

Ferrules made from the material specified in this document are suitable for use in all the operating service environments defined in IEC 61753-1.

Ferrule dimensions and features are contained in the IEC 61754 series of fibre optic connector interface standards.

2 Normative references

The following documents are referred to in the text in such a way that some or all of their content constitutes requirements of this document. For dated references, only the edition cited applies. For undated references, the latest edition of the referenced document (including any amendments) applies.

IEC 61755-1, *Fibre optic interconnecting devices and passive components – Connector optical interfaces for single-mode fibres – Part 1: Optical interfaces for dispersion unshifted fibres – General and guidance*

3 Terms and definitions

For the purposes of this document, the terms and definitions given in IEC 61755-1 apply.

ISO and IEC maintain terminology databases for use in standardization at the following addresses:

- IEC Electropedia: available at https://www.electropedia.org/
- ISO Online browsing platform: available at https://www.iso.org/obp

4 Description

The performance of a physical contact (PC) cylindrical ferrule optical interface is determined by the alignment of the optical datum targets of two mating ferrules. There are three conditions affecting the alignment of two optical datum targets: lateral offset, angular offset and longitudinal offset.

Documents
Document Sharing Hub

Full document details: IEC 61755-3-1-2024

Parameters influencing the lateral and angular offset of the optical fibre axes include the following:

– ferrule outside diameter,
– ferrule bore concentricity relative to the ferrule outside diameter,
– ferrule bore angle relative to ferrule outside diameter axis,
– fibre cladding diameter relative to ferrule bore diameter,
– fibre core concentricity relative to the fibre cladding diameter,
– fibre core orientation relative to connector guide key,
– alignment sleeve inside diameter.

Parameters influencing the connector plug endface deformation requirements to maintain the physical contact of the ferrules within a mated connection are as follows:

– endface spherical radius,
– endface spherical radius apex offset,
– fibre undercut,
– axial force on ferrule endface,
– ferrule and fibre material physical constants,
– alignment sleeve frictional force.

5 Interface parameters

The endface dimensions of terminated connector plugs provided in Figure 1 and Figure 2 show the geometrical position of the fibre core for two alternative variants. These core location variants ensure full intermateability between Variant 1 and Variant 2 as defined in IEC 61755-1. In addition, both variants produced per this document are fully backwards compatible with Grade B in IEC 61755-3-1:2006.

The ferrule dimensions are defined in Figure 3. The parameter requirements are detailed in Table 1, Table 2 and Table 3.

Documents
Document Sharing Hub
Full document details: IEC 61755-3-1-2024

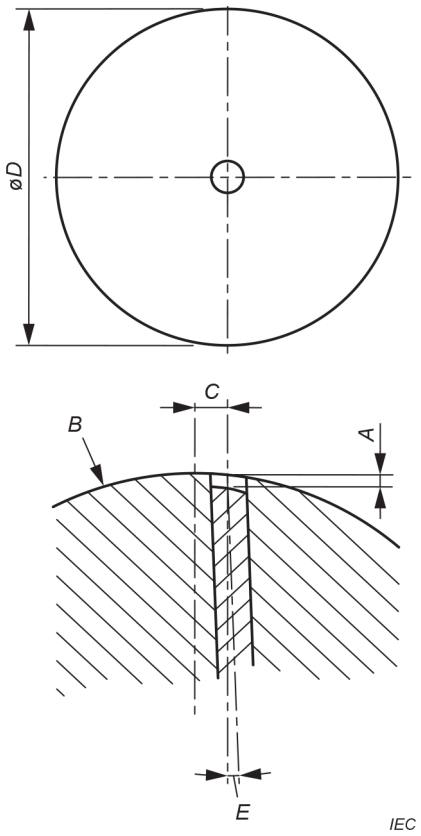

Figure 1 – Connector plug endface dimensions

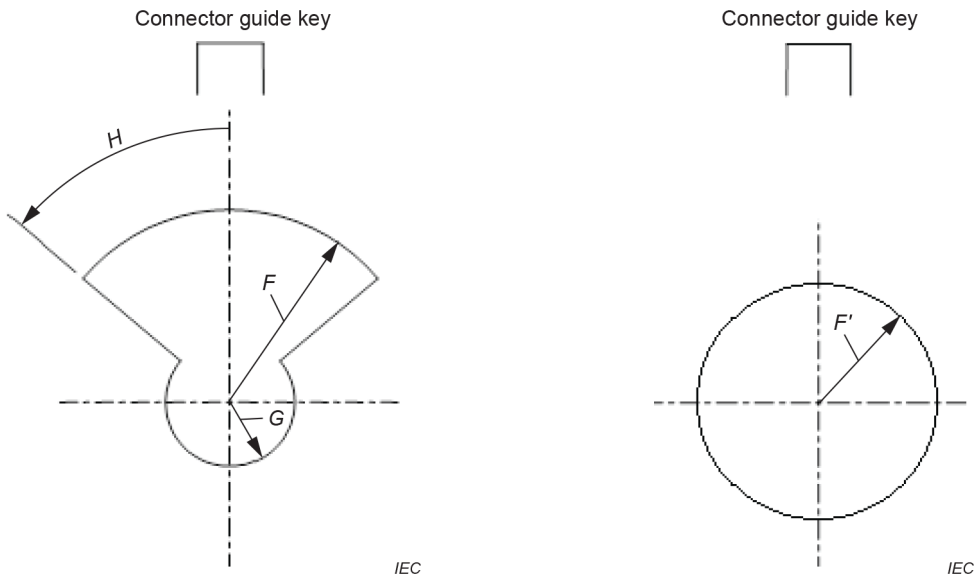

a) Variant 1 **b) Variant 2**

NOTE F, F', G and H define the radial and angular coordinate limits of the optical fibre core axis relative to the optical datum target of the ferrule.

Figure 2 – Geometric requirements for fibre core location after termination

Documents
Document Sharing Hub
Full document details: IEC 61755-3-1-2024

Table 1 – Optical interface parameter values for 2,5 mm diameter ferrule

Ref.	Parameter values								Unit	Remarks
	Grade A		Grade B		Grade C		Grade D			
	Min.	Max.	Min.	Max.	Min.	Max.	Min.	Max.		
A[b]			–100	[a]	–100	[a]	–100	[a]	nm	Fibre undercut or protrusion
B			5	30	5	30	5	30	mm	Spherical radius
C			0	50	0	50	0	50	µm	Apex offset
D			2,498 5	2,499 5	2,498 5	2,499 5	2,498 5	2,499 5	mm	Ferrule outside diameter
E			0	0,2	0	0,3	0	0,6	°	Angle of fibre axis
F			0	1,2[c]	0	1,5[d]	Not Applicable		µm	Radius, See Figure 2 a)
F'			0	0,7[e]	0	1,2[f]	0	1,6[g]	µm	Radius, See Figure 2 b)
G			0	0,3	0	0,3	Not Applicable		µm	Radius, See Figure 2 a)
H			0	50	0	50	Not Applicable		°	See Figure 2 a)

NOTE 1 The core location (F, F', G, H) and tilt angle (E) values specified in this document have been calculated to ensure that the attenuation values specified in IEC 61755-2-1 are met under all circumstances (See Annex C). Guidance on expected attenuation values when mated to a reference connector plug can be found in Annex B.

NOTE 2 Core eccentricity Variant 1 [Figure 2 a)] and Variant 2 [Figure 2 b)] are intended to be fully intermateable for a given performance grade as defined in IEC 61755-1.

NOTE 3 Grade A is reserved for future application.

NOTE 4 Attenuation performance grades are defined in IEC 61755-1.

NOTE 5 See Annex D for information on estimation of average fibre core eccentricity limits as a function of batch size. The batch size may be changed according to the guidance in Annex D. The batch size should be included in the report.

NOTE 6 Refer to IEC 61300-3-47 for endface geometry measurement of PC spherically polished ferrules using interferometry.

NOTE 7 To account for uncertainty in fibre core eccentricity measurements, the limits and mean values are rounded to one significant digit after the comma.

[a] Contact force 4,9 N nominal. Ferrule material: 3 mol % yttria stabilized zirconia, ZrO_2. Nominal material physical constant values: Young's Modulus, 200 GPa ± 20 GPa, Poisson's Ratio, 0,30 to 0,31. See Annex A for details.

$$A_{\text{maximum}} = 1\ 988 \cdot B^{(-0{,}795)} - B \cdot 10^6 + \left(\sqrt{B^2 \cdot 10^6 - C^2}\right) \cdot 10^3 - 60$$

[b] A as a negative value indicates fibre protrusion.

[c] Fibre core eccentricity distribution shall have a mean less than or equal to 0,4 µm. See Note 5.

[d] Fibre core eccentricity distribution shall have a mean less than or equal to 0,6 µm. See Note 5.

[e] Fibre core eccentricity distribution shall have a mean less than or equal to 0,3 µm. See Note 5.

[f] Fibre core eccentricity distribution shall have a mean less than or equal to 0,5 µm. See Note 5.

[g] Fibre core eccentricity distribution shall have a mean less than or equal to 0,6 µm. See Note 5.

Documents
Document Sharing Hub
Full document details: IEC 61755-3-1-2024

Table 2 – Optical interface parameter values for 1,25 mm diameter ferrule

Ref.	Parameter values								Unit	Remarks
	Grade A		Grade B		Grade C		Grade D			
	Min.	Max.	Min.	Max.	Min.	Max.	Min.	Max.		
A[b]			–100	[a]	–100	[a]	–100	[a]	nm	Fibre undercut or protrusion
B			5	30	5	30	5	30	mm	Spherical radius
C			0	50	0	50	0	50	µm	Apex offset
D			1,248 5	1,249 5	1,248 5	1,249 5	1,248 5	1,249 5	mm	Outside diameter
E			0	0,2	0	0,3	0	0,6	°	Angle of fibre axis
F			0	1,2[c]	0	1,5[d]	Not Applicable		µm	Radius, See Figure 2 a)
F'			0	0,7[e]	0	1,2[f]	0	1,6[g]	µm	Radius, See Figure 2 b)
G			0	0,3	0	0,3	Not Applicable		µm	Radius, See Figure 2 a)
H			0	50	0	50	Not Applicable		°	See Figure 2 a)

NOTE 1 The core location (F, F', G, H) and tilt angle (E) values specified in this document have been calculated to ensure that the attenuation values specified in IEC 61755-2-1 are met under all circumstances (See Annex C). Guidance on expected attenuation values when mated to a reference connector plug can be found in Annex B.

NOTE 2 Core eccentricity Variant 1 [Figure 2 a)] and Variant 2 [Figure 2 b)] are intended to be fully intermateable for a given performance grade as defined in IEC 61755-1.

NOTE 3 Grade A is reserved for future application.

NOTE 4 Attenuation performance grades are defined in IEC 61755-1.

NOTE 5 See Annex D for information on estimation of average fibre core eccentricity limits as a function of batch size. The batch size may be changed according to the guidance in Annex D. The batch size should be included in the report.

NOTE 6 Refer to IEC 61300-3-47 for endface geometry measurement of PC spherically polished ferrules using interferometry.

NOTE 7 To account for uncertainty in fibre core eccentricity measurements, the limits and mean values are rounded to one significant digit after the comma.

[a] Contact force 2,9 N nominal. Ferrule material: 3 mol % yttria stabilized zirconia, ZrO_2. Nominal material physical constant values: Young's Modulus, 200 GPa ± 20 GPa, Poisson's Ratio, 0,30 to 0,31. See Annex A for details.

$$A_{\text{maximum}} = 1\ 798 \cdot B^{(-0,795)} - B \cdot 10^6 + \left(\sqrt{B^2 \cdot 10^6 - C^2}\right) \cdot 10^3 - 60$$

[b] A as a negative value indicates fibre protrusion.

[c] Fibre core eccentricity distribution shall have a mean less than or equal to 0,4 µm. See Note 5.

[d] Fibre core eccentricity distribution shall have a mean less than or equal to 0,6 µm. See Note 5.

[e] Fibre core eccentricity distribution shall have a mean less than or equal to 0,3 µm. See Note 5.

[f] Fibre core eccentricity distribution shall have a mean less than or equal to 0,5 µm. See Note 5.

[g] Fibre core eccentricity distribution shall have a mean less than or equal to 0,6 µm. See Note 5.

AVA Documents Document Sharing Hub

Full document details: IEC 61755-3-1-2024

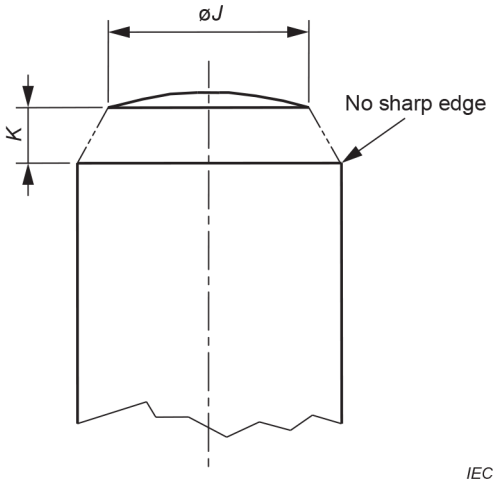

Figure 3 – Ferrule dimensions

Table 3 – Optical interface parameter values for PC ferrules

Ref.	2,5 mm diameter ferrule parameter values		1,25 mm diameter ferrule parameter values		Remarks
	Min. mm	Max. mm	Min. mm	Max. mm	
ØJ	0,8	-	0,6	-	Diameter
K	-	1,8	-	1,0	

Documents
Document Sharing Hub
Full document details: IEC 61755-3-1-2024

Annex A
(informative)

Maximum allowed spherical fibre undercut

The maximum allowed spherical fibre undercut, A_{maximum} (see Figure A.1 and Figure A.2), is determined by the interaction of the parameters influencing the longitudinal offset of the optical fibre axes as defined by Formula (A.1).

$$A_{\text{maximum}} = k_1 \cdot B^{k_2} - B \cdot 10^6 + \left(\sqrt{B^2 \cdot 10^6 - C^2}\right) \cdot 10^3 - D_{\text{DTE}} - D_{\text{PFW}} \quad \text{(A.1)}$$

where

A_{maximum} is the maximum spherical undercut for physical contact (nm),

k_1 is the coefficient based on ferrule contact force and material properties,

k_2 is the exponent based on ferrule contact force and material properties,

B is the endface spherical radius (mm),

C is the apex offset from fibre axis (µm),

D_{DTE} is the differential thermal expansion between the ferrule material and the silica fibre at maximum operating temperature (nm),

D_{PFW} is the permanent fibre withdrawal that exceeds the transient fibre movement predicted by the first three terms in Formula (A.1) (nm).

Endface deformation term as a function of contact force, endface radius and material properties is shown in Formula (A.2):

$$k_1 \cdot B^{k_2} \quad \text{(A.2)}$$

Geometric compensation term for the offset of the ferrule apex from the fibre axis is shown in Formula (A.3):

$$B \cdot 10^6 + \left(\sqrt{B^2 \cdot 10^6 - C^2}\right) \cdot 10^3 \quad \text{(A.3)}$$

Documents
Document Sharing Hub
Full document details: IEC 61755-3-1-2024

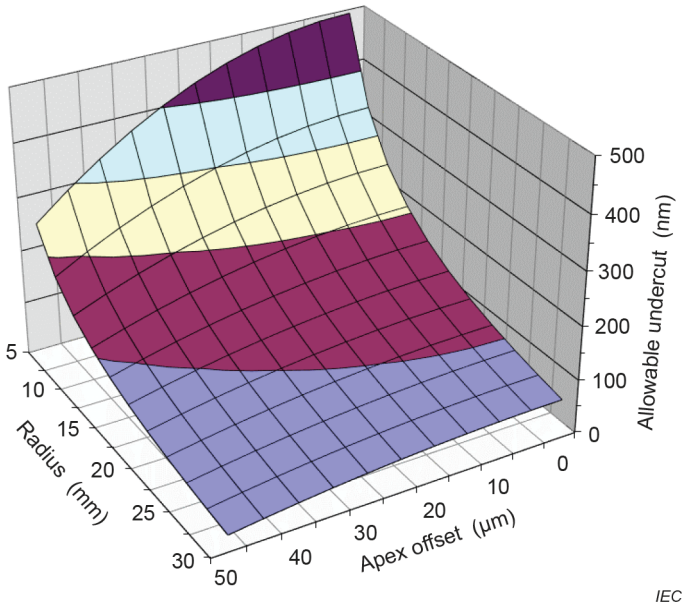

$$A_{\text{maximum}} = 1\ 988 \cdot B^{(-0{,}795)} - B \cdot 10^6 + \left(\sqrt{B^2 \cdot 10^6 - C^2}\right) \cdot 10^3 - 60$$

Figure A.1 – Allowable undercut as a function of endface radius and apex offset – 4,9 N minimum contact force

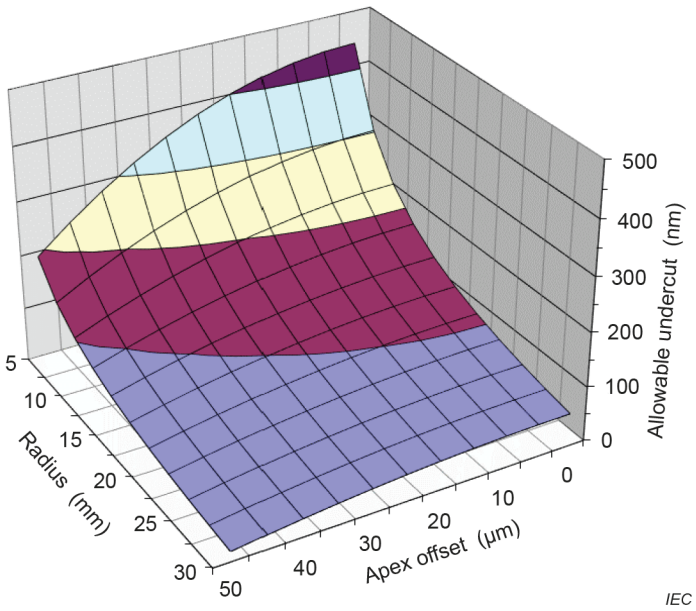

$$A_{\text{maximum}} = 1\ 798 \cdot B^{(-0{,}795)} - B \cdot 10^6 + \left(\sqrt{B^2 \cdot 10^6 - C^2}\right) \cdot 10^3 - 60$$

Figure A.2 – Allowable undercut as a function of endface radius and apex offset – 2,9 N minimum contact force

Documents
Document Sharing Hub
Full document details: IEC 61755-3-1-2024

Annex B
(informative)

Expected attenuation when mated to reference connector plugs

This annex describes the expected attenuation when terminated connector plugs are mated against a reference interface. The use of reference cords helps to ensure consistency between field measurements and factory measurements.

The performance grades defined within this document are based solely on the geometric optical interface parameters which influence lateral and angular offset. Therefore, attenuation measurements against a reference connector plug are not a substitution for dimensional compliance of an optical interface and should not be used to select connector plugs for a given performance grade.

The estimated descriptive statistics of connector plugs mated against reference interfaces defined in IEC 61755-2-4 (Grade R1) are provided within Table B.1. These values are calculated at 1 310 nm wavelength using Monte Carlo techniques.

Table B.1 – Descriptive statistics when performance grades are mated against a Grade R1 reference interface

Descriptive statistic	Description	Performance grade (dB)				
		Variant 1		Variant 2		
		B	C	B	C	D
μ	Average	0,07	0,11	0,04	0,07	0,12
σ	Standard deviation	0,05	0,09	0,03	0,06	0,11
0,97	> 97 % probability	0,21	0,34	0,11	0,22	0,38

When screening products against a reference, the 99,9 % value is used as limits:

a) For Variant 1, it is recommended to use 0,35 dB for the Grade B limit and 0,45 dB for the Grade C limit.

b) For Variant 2, it is recommended to use 0,20 dB for the Grade B limit, 0,35 dB for the Grade C limit, and 0,65 dB for the Grade D limit.

This screening can be used to inspect for failure modes such as fractured fibres, mechanical stresses, microbending or macrobending (assuring optical functionality).

Documents
Document Sharing Hub
Full document details: IEC 61755-3-1-2024

Annex C
(informative)

Guidance related to simulation of optical interface attenuation

The attenuation of an optical interface is influenced by several parameters, which combine to form a summation of both intrinsic (fibre property mismatch) and extrinsic (misalignment) losses. Fibre related losses are direction independent and related to variation between mating mode field diameters. Misalignment induced losses are influenced by lateral and angular offset of the optical fibre axes. The alignment of the optical datum targets of two mating ferrules is a function of dimensional limits placed on the fibre, ferrule, and alignment sleeve, including tolerances on the fibre core eccentricity and cladding diameter, ferrule fibre hole size, concentricity, tilt relative to the ferrule outside diameter, and fit of the ferrule within the alignment sleeve.

For a given performance grade, propagation of the individual tolerances in a worst-case condition generally results in overly restrictive controls on the fibre, ferrule, and alignment sleeve system. Therefore, statistical tolerance methods have been adopted for the development of the optical interface. Estimated attenuation thresholds are placed on two statistical values: the mean and the 97th percentile of the distribution of random-mate connections. The attenuation distributions can be computed analytically from parameterized probability density functions or using approaches such as Monte Carlo techniques.

The distributions and related statistical values (i.e. mean and 97th percentile) in this document are valid for the entire population of random-mate connections.

The actual distributions of attenuation and the related statistical values (i.e. mean and 97th percentile) can deviate from the simulated ones in this document for two main reasons:

1) Batch effects in production of fibres and ferrules are encountered leading to different attenuation populations.
2) Samples from an attenuation population are drawn and evaluated (e.g. a small-size production lot of terminated assemblies).

Using the estimated attenuation population given in the document, confidence intervals for both related statistical values (i.e. mean and 97th percentile) can be computed.

The attenuation, η_{combined}, between mating fibres, is based on a Gaussian beam approximation for the distribution of the incident light and is given by Formula (C.1).

$$\eta_{\text{combined}} = -10\log_{10}\left[\frac{(2\omega_2\omega_1)^2}{\left(\omega_2{}^2+\omega_1{}^2\right)^2}\exp\left[\frac{-2\cdot d^2}{\omega_2{}^2+\omega_1{}^2}-2\pi^2\frac{n_0{}^2}{\lambda^2}\frac{\left(\omega_2{}^2\omega_1{}^2\right)}{\left(\omega_2{}^2+\omega_1{}^2\right)}\sin^2(\theta)\right]\right] \quad \text{(C.1)}$$

where

d is the total lateral offset,

θ is the angular offset between fibre core axes,

λ is the wavelength of transmitted light in vacuum,

n_0 is the index of refraction of the fibre core,

ω_1 is the transmit fibre mode field radius,

ω_2 is the receive fibre mode field radius.

AVA Documents Document Sharing Hub