# IEC 61755-3-32

Edition 1.0 2015-06

# INTERNATIONAL STANDARD

# NORME INTERNATIONALE

colour inside

## Fibre optic interconnecting devices and passive components – Connector optical interfaces –
## Part 3-32: Connector parameters of non-dispersion shifted single mode physically contacting fibres – Angled thermoset epoxy rectangular ferrules

## Dispositifs d'interconnexion et composants passifs à fibres optiques – Interfaces optiques de connecteurs –
## Partie 3-32: Paramètres de connecteurs pour fibres unimodales à dispersion non décalée, en contact physique – Férules rectangulaires avec angle en époxy thermodurcissable

IEC 61755-3-32:2015-06(en-fr)

AVA Documents
Document Sharing Hub

Full document details: IEC 61755-3-32 2015

**THIS PUBLICATION IS COPYRIGHT PROTECTED**
**Copyright © 2015 IEC, Geneva, Switzerland**

All rights reserved. Unless otherwise specified, no part of this publication may be reproduced or utilized in any form or by any means, electronic or mechanical, including photocopying and microfilm, without permission in writing from either IEC or IEC's member National Committee in the country of the requester. If you have any questions about IEC copyright or have an enquiry about obtaining additional rights to this publication, please contact the address below or your local IEC member National Committee for further information.

Droits de reproduction réservés. Sauf indication contraire, aucune partie de cette publication ne peut être reproduite ni utilisée sous quelque forme que ce soit et par aucun procédé, électronique ou mécanique, y compris la photocopie et les microfilms, sans l'accord écrit de l'IEC ou du Comité national de l'IEC du pays du demandeur. Si vous avez des questions sur le copyright de l'IEC ou si vous désirez obtenir des droits supplémentaires sur cette publication, utilisez les coordonnées ci-après ou contactez le Comité national de l'IEC de votre pays de résidence.

IEC Central Office
3, rue de Varembé
CH-1211 Geneva 20
Switzerland

Tel.: +41 22 919 02 11
Fax: +41 22 919 03 00
info@iec.ch
www.iec.ch

**About the IEC**
The International Electrotechnical Commission (IEC) is the leading global organization that prepares and publishes International Standards for all electrical, electronic and related technologies.

**About IEC publications**
The technical content of IEC publications is kept under constant review by the IEC. Please make sure that you have the latest edition, a corrigenda or an amendment might have been published.

**IEC Catalogue - webstore.iec.ch/catalogue**
The stand-alone application for consulting the entire bibliographical information on IEC International Standards, Technical Specifications, Technical Reports and other documents. Available for PC, Mac OS, Android Tablets and iPad.

**IEC publications search - www.iec.ch/searchpub**
The advanced search enables to find IEC publications by a variety of criteria (reference number, text, technical committee,…). It also gives information on projects, replaced and withdrawn publications.

**IEC Just Published - webstore.iec.ch/justpublished**
Stay up to date on all new IEC publications. Just Published details all new publications released. Available online and also once a month by email.

**Electropedia - www.electropedia.org**
The world's leading online dictionary of electronic and electrical terms containing more than 30 000 terms and definitions in English and French, with equivalent terms in 15 additional languages. Also known as the International Electrotechnical Vocabulary (IEV) online.

**IEC Glossary - std.iec.ch/glossary**
More than 60 000 electrotechnical terminology entries in English and French extracted from the Terms and Definitions clause of IEC publications issued since 2002. Some entries have been collected from earlier publications of IEC TC 37, 77, 86 and CISPR.

**IEC Customer Service Centre - webstore.iec.ch/csc**
If you wish to give us your feedback on this publication or need further assistance, please contact the Customer Service Centre: csc@iec.ch.

---

**A propos de l'IEC**
La Commission Electrotechnique Internationale (IEC) est la première organisation mondiale qui élabore et publie des Normes internationales pour tout ce qui a trait à l'électricité, à l'électronique et aux technologies apparentées.

**A propos des publications IEC**
Le contenu technique des publications IEC est constamment revu. Veuillez vous assurer que vous possédez l'édition la plus récente, un corrigendum ou amendement peut avoir été publié.

**Catalogue IEC - webstore.iec.ch/catalogue**
Application autonome pour consulter tous les renseignements bibliographiques sur les Normes internationales, Spécifications techniques, Rapports techniques et autres documents de l'IEC. Disponible pour PC, Mac OS, tablettes Android et iPad.

**Recherche de publications IEC - www.iec.ch/searchpub**
La recherche avancée permet de trouver des publications IEC en utilisant différents critères (numéro de référence, texte, comité d'études,…). Elle donne aussi des informations sur les projets et les publications remplacées ou retirées.

**IEC Just Published - webstore.iec.ch/justpublished**
Restez informé sur les nouvelles publications IEC. Just Published détaille les nouvelles publications parues. Disponible en ligne et aussi une fois par mois par email.

**Electropedia - www.electropedia.org**
Le premier dictionnaire en ligne de termes électroniques et électriques. Il contient plus de 30 000 termes et définitions en anglais et en français, ainsi que les termes équivalents dans 15 langues additionnelles. Egalement appelé Vocabulaire Electrotechnique International (IEV) en ligne.

**Glossaire IEC - std.iec.ch/glossary**
Plus de 60 000 entrées terminologiques électrotechniques, en anglais et en français, extraites des articles Termes et Définitions des publications IEC parues depuis 2002. Plus certaines entrées antérieures extraites des publications des CE 37, 77, 86 et CISPR de l'IEC.

**Service Clients - webstore.iec.ch/csc**
Si vous désirez nous donner des commentaires sur cette publication ou si vous avez des questions contactez-nous: csc@iec.ch.

Documents
Document Sharing Hub

Full document details: IEC 61755-3-32 2015

# IEC 61755-3-32

Edition 1.0 2015-06

# INTERNATIONAL STANDARD

# NORME INTERNATIONALE

colour inside

## Fibre optic interconnecting devices and passive components – Connector optical interfaces – Part 3-32: Connector parameters of non-dispersion shifted single mode physically contacting fibres – Angled thermoset epoxy rectangular ferrules

## Dispositifs d'interconnexion et composants passifs à fibres optiques – Interfaces optiques de connecteurs – Partie 3-32: Paramètres de connecteurs pour fibres unimodales à dispersion non décalée, en contact physique – Férules rectangulaires avec angle en époxy thermodurcissable

INTERNATIONAL
ELECTROTECHNICAL
COMMISSION

COMMISSION
ELECTROTECHNIQUE
INTERNATIONALE

ICS 33.180.20

ISBN 978-2-8322-2713-8

**Warning! Make sure that you obtained this publication from an authorized distributor.**
**Attention! Veuillez vous assurer que vous avez obtenu cette publication via un distributeur agréé.**

AVA Documents
Document Sharing Hub

® Registered trademark of the International Electrotechnical Commission
Marque déposée de la Commission Electrotechnique Internationale

Full document details: IEC 61755-3-32 2015

CONTENTS

FOREWORD ..... 3
1 Scope ..... 5
2 Normative references ..... 5
3 Description ..... 6
4 Interface parameters ..... 6
Annex A (informative) Theoretical worst-case connector attenuation yield percentage ..... 12
Annex B (informative) Minus coplanarity ..... 14
Annex C (informative) Minimum normal force required to achieve physical contact ..... 15
Bibliography ..... 19

Figure 1 – Fibre numbering conventions ..... 7
Figure 2 – Interface dimensions related to lateral and angular offset ..... 7
Figure 3 – Alignment pin geometry ..... 8
Figure 4 – Interface dimensions related to longitudinal offset ..... 9
Figure A.1 – Monte Carlo simulation of Grade C performance for 12-fibre connectors ..... 12
Figure B.1 – Illustration of fibre line and minus coplanarity parameters ..... 14
Figure C.1 – Geometry limit ($GL$), needed to mate 12 fibres, as a function of absolute X-angle, $|SX|$ for different magnitudes of minus coplanarity and flat fibre tips ..... 16
Figure C.2 – Geometry limit ($GL$), needed to mate 12 fibres, as a function of absolute X-angle, $|SX|$ for different magnitudes of minus coplanarity and 1 mm fibre tips ..... 16

Table 1 – Optical interface variant information ..... 7
Table 2 – Optical interface dimensions related to lateral and angular offset for optical interface variant 2112 ..... 10
Table 3 – Optical interface end face geometry dimensions related to physical contact for optical interface variant 2112 ..... 11
Table A.1 – Grade C single channel vs. multi-fibre connector performance ..... 13
Table C.1 – Parameter constants for 4-fibre optical interface variant K2 ..... 18
Table C.2 – Parameter constants for 8-fibre optical interface variant K3 ..... 18
Table C.3 – Parameter constants for 12-fibre optical interface variant K4 ..... 18

Documents
Document Sharing Hub
Full document details: IEC 61755-3-32 2015

INTERNATIONAL ELECTROTECHNICAL COMMISSION

# FIBRE OPTIC INTERCONNECTING DEVICES AND PASSIVE COMPONENTS – CONNECTOR OPTICAL INTERFACES –

## Part 3-32: Connector parameters of non-dispersion shifted single mode physically contacting fibres – Angled thermoset epoxy rectangular ferrules

## FOREWORD

1) The International Electrotechnical Commission (IEC) is a worldwide organization for standardization comprising all national electrotechnical committees (IEC National Committees). The object of IEC is to promote international co-operation on all questions concerning standardization in the electrical and electronic fields. To this end and in addition to other activities, IEC publishes International Standards, Technical Specifications, Technical Reports, Publicly Available Specifications (PAS) and Guides (hereafter referred to as "IEC Publication(s)"). Their preparation is entrusted to technical committees; any IEC National Committee interested in the subject dealt with may participate in this preparatory work. International, governmental and non-governmental organizations liaising with the IEC also participate in this preparation. IEC collaborates closely with the International Organization for Standardization (ISO) in accordance with conditions determined by agreement between the two organizations.
2) The formal decisions or agreements of IEC on technical matters express, as nearly as possible, an international consensus of opinion on the relevant subjects since each technical committee has representation from all interested IEC National Committees.
3) IEC Publications have the form of recommendations for international use and are accepted by IEC National Committees in that sense. While all reasonable efforts are made to ensure that the technical content of IEC Publications is accurate, IEC cannot be held responsible for the way in which they are used or for any misinterpretation by any end user.
4) In order to promote international uniformity, IEC National Committees undertake to apply IEC Publications transparently to the maximum extent possible in their national and regional publications. Any divergence between any IEC Publication and the corresponding national or regional publication shall be clearly indicated in the latter.
5) IEC itself does not provide any attestation of conformity. Independent certification bodies provide conformity assessment services and, in some areas, access to IEC marks of conformity. IEC is not responsible for any services carried out by independent certification bodies.
6) All users should ensure that they have the latest edition of this publication.
7) No liability shall attach to IEC or its directors, employees, servants or agents including individual experts and members of its technical committees and IEC National Committees for any personal injury, property damage or other damage of any nature whatsoever, whether direct or indirect, or for costs (including legal fees) and expenses arising out of the publication, use of, or reliance upon, this IEC Publication or any other IEC Publications.
8) Attention is drawn to the Normative references cited in this publication. Use of the referenced publications is indispensable for the correct application of this publication.
9) Attention is drawn to the possibility that some of the elements of this IEC Publication may be the subject of patent rights. IEC shall not be held responsible for identifying any or all such patent rights.

International Standard IEC 61755-3-32 has been prepared by subcommittee 86B: Fibre optic interconnecting devices and passive components, of IEC technical committee 86: Fibre optics.

This first edition cancels and replaces IEC PAS 61755-3-32 published in 2007. This edition constitutes a technical revision.

The text of this standard is based on the following documents:

| FDIS | Report on voting |
|---|---|
| 86B/3889/FDIS | 86B/3915/RVD |

Full information on the voting for the approval of this standard can be found in the report on voting indicated in the above table.

AVA Documents
Document Sharing Hub

Full document details: IEC 61755-3-32 2015

This publication has been drafted in accordance with the ISO/IEC Directives, Part 2.

A list of all parts of the IEC 61755 series, under the general title *Fibre optic interconnecting devices and passive components – Connector optical interfaces*, can be found on the IEC website.

Future standards in this series will carry the new general title as cited above. Titles of existing standards in this series will be updated at the time of the next edition.

The committee has decided that the contents of this publication will remain unchanged until the stability date indicated on the IEC web site under "http://webstore.iec.ch" in the data related to the specific publication. At this date, the publication will be

- reconfirmed,
- withdrawn,
- replaced by a revised edition, or
- amended.

**IMPORTANT – The 'colour inside' logo on the cover page of this publication indicates that it contains colours which are considered to be useful for the correct understanding of its contents. Users should therefore print this document using a colour printer.**

Documents
Document Sharing Hub

Full document details: IEC 61755-3-32 2015

# FIBRE OPTIC INTERCONNECTING DEVICES AND PASSIVE COMPONENTS – CONNECTOR OPTICAL INTERFACES –

## Part 3-32: Connector parameters of non-dispersion shifted single mode physically contacting fibres – Angled thermoset epoxy rectangular ferrules

## 1 Scope

This part of IEC 61755 defines certain dimensional limits of an angled PC rectangular thermoset (TS) ferrule optical interface in order to meet specific requirements for fibre-to-fibre interconnection. Ferrules made from the material specified in this standard are suitable for use in categories C, U, E, and O as defined in IEC 61753-1.

Ferrule interface dimensions and features are contained in the IEC 61754 series, which deals with fibre optic connector interfaces.

## 2 Normative references

The following documents, in whole or in part, are normatively referenced in this document and are indispensable for its application. For dated references, only the edition cited applies. For undated references, the latest edition of the referenced document (including any amendments) applies.

IEC 60793-2-50, *Optical fibres – Part 2-50: Product specifications – Sectional specification for class B single-mode fibres*

IEC 61300-3-30, *Fibre optic interconnecting devices and passive components – Basic test and measurement procedures – Part 3-30: Examinations and measurements – Polish angle and fibre position on single ferrule multifibre connectors*

IEC 61300-3-52, *Fibre optic interconnecting devices and passive components – Basic test and measurement procedures – Part 3-52: Examinations and measurements – Guide hole and alignment pin deformation constant, $C_D$ for 8 degree angled PC rectangular ferrule, single mode fibres*

IEC 61754 (all parts), *Fibre optic interconnection devices and passive components – Fibre optic connector interfaces*

IEC 61754-5:2005, *Fibre optic connector interfaces – Part 5: Type MT connector family*

IEC 61754-7:2008, *Fibre optic interconnecting devices and passive components – Fibre optic connector interfaces – Part 7: Type MPO connector family*

IEC 61754-7-1:2014, *Fibre optic interconnecting devices and passive components – Fibre optic connector interfaces – Part 7-1: Type MPO connector family – One fibre row*

IEC 61755-1, *Fibre optic connector optical interfaces – Part 1: Optical interface for single mode non dispersion shifted fibres – General and guidance*

Documents
Document Sharing Hub

Full document details: IEC 61755-3-32 2015

## 3 Description

The performance of a single mode angled PC rectangular ferrule optical interface is determined by the accuracy with which the optical datum targets of two mating ferrules are aligned with each other. There are three conditions affecting the alignment of the optical datum targets: lateral offset, angular offset, and longitudinal offset.

Parameters influencing the lateral and angular offset of the optical fibre axes include the following:

– fibre hole deviation from designated location;
– fibre cladding diameter relative to fibre hole clearance;
– fibre hole angular misalignment;
– fibre core concentricity relative to the cladding diameter;
– alignment pin diameter relative to the guide hole clearance.

Parameters influencing the longitudinal offset of the optical fibre axes include the following:

– fibre protrusion;
– fibre array minus coplanarity;
– adjacent fibre height differential;
– end face angle in the x-axis;
– end face angle in the y-axis;
– end face radius in the x-axis;
– end face radius in the y-axis;
– fibre tip spherical radii;
– axial force on ferrule end face;
– ferrule and fibre material constants;
– frictional force of alignment pins in ferrule guide holes.

## 4 Interface parameters

This standard defines the dimensional limits of angled PC rectangular ferrules with a single row of up to 12 fibres. The fibre centres are spaced with a nominal alignment pitch of 0,25 mm. Interface variants, which identify nominal ferrule cross-sections and applicable fibre counts, are given in Table 1. The fibre numbering conventions are illustrated in Figure 1.

Optical interface dimensions related to lateral and angular offset are defined in Figure 2 and the alignment pin geometry is shown in Figure 3. The end face geometry parameters that influence longitudinal offset are outlined in Figure 4.

The parameter values related to lateral and angular offset are given in Table 2. End face geometry limits associated with longitudinal offset are specified in Table 3.

Documents
Document Sharing Hub
Full document details: IEC 61755-3-32 2015

**Table 1 – Optical interface variant information**

| Variant number [b,c] | Nominal ferrule cross section [a] mm × mm | Number of fibres |
|---|---|---|
| 2112 | 2,45 × 6,4 | 12 |

[a] Refer to the applicable IEC 61754 series fibre optic connector interface standard for dimensional requirements.

[b] The four-digit variant code describes a combination of material type, nominal ferrule cross-section and number of fibres. The first digit defines 1 for PPS ferrule materials and 2 for thermoset materials; the second digit represents 2,45 mm × 4,4 mm with 0 and 2,45 mm × 6,4 mm with 1; and the last two digits designates the number of fibres.

[c] All ferrule materials for rectangular type ferrules are intended to be intermateable, in the lowest specified performance category as described in IEC 61755-1, provided that the last three digits of the variant number are the same. It is also possible to mate ferrules with different fibre counts, in which case all mating fibres shall meet the designated performance category.

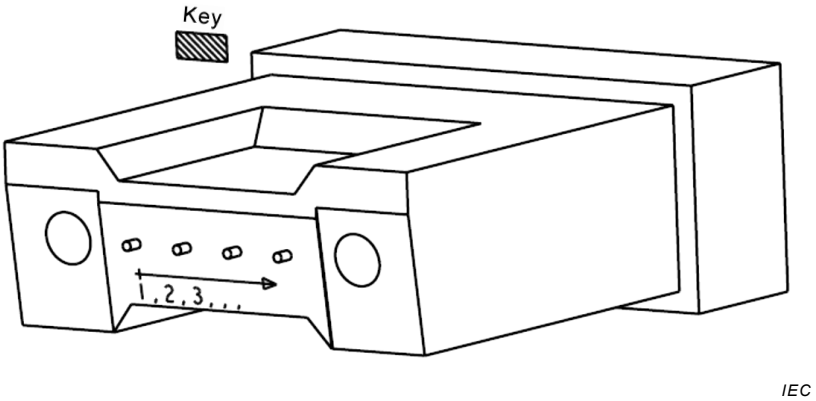


**Figure 1 – Fibre numbering conventions**

To provide optical fibre-to-fibre interconnection, mating ferrules have to be correctly keyed. Refer to the applicable IEC 61754 series document to ensure correct key orientation.

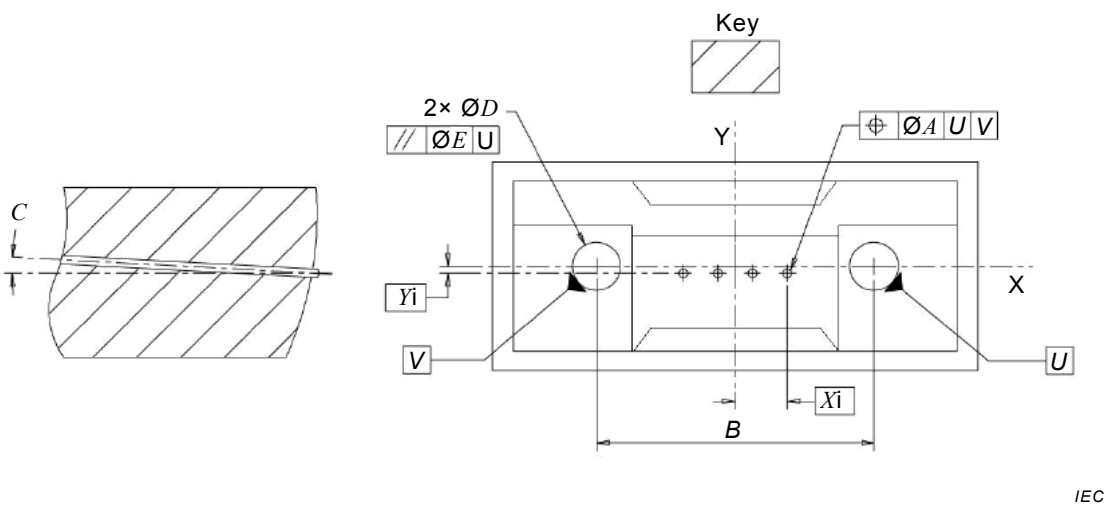


**Figure 2 – Interface dimensions related to lateral and angular offset**

Documents
Document Sharing Hub
Full document details: IEC 61755-3-32 2015

The optical interface coordinate system is established with an x-axis, which passes through the guide hole centres and a perpendicular y-axis that passes through the midpoint of the line connecting the guide hole centres.

The basic x-location, $Xi$, for each fibre core centre is defined as:

$$Xi = (2i - n - 1)\ 0{,}125$$

where, $i$ corresponds to the $i^{th}$ fibre per the numbering conventions outlined in Figure 1 and $n$ is the total number of fibres in the array.

The basic y-location, $Yi$, for each fibre core centre is defined as follows:

$$Yi = \alpha \frac{D_o - D_i}{2} + C_D$$

The basic alignment pin dimension, $D_i$, is 0,698 5 mm and the basic guide hole dimension, $D_o$, is a nominal value based on the manufacturer designed average hole size. The constant, $\alpha$, relates to differences in guide pin pitch and varies between 0 and 1. The term $C_D$ is a deformation constant based on ferrule structure, material, and moulding condition. Typical values $C_D$ are between 0,3 µm and 0,6 µm. Refer to IEC 61300-3-52 for information on how to measure and define $Yi$.

To ensure compatibility when mating rectangular ferrules with alternative $Yi$ targets, manufacturers of ferrules shall report their specified values for $Yi$, $\alpha$, $D_o$, and $C_D$.

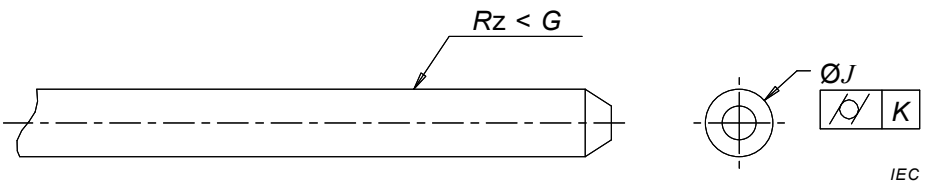


**Figure 3 – Alignment pin geometry**

Documents
Document Sharing Hub
Full document details: IEC 61755-3-32 2015

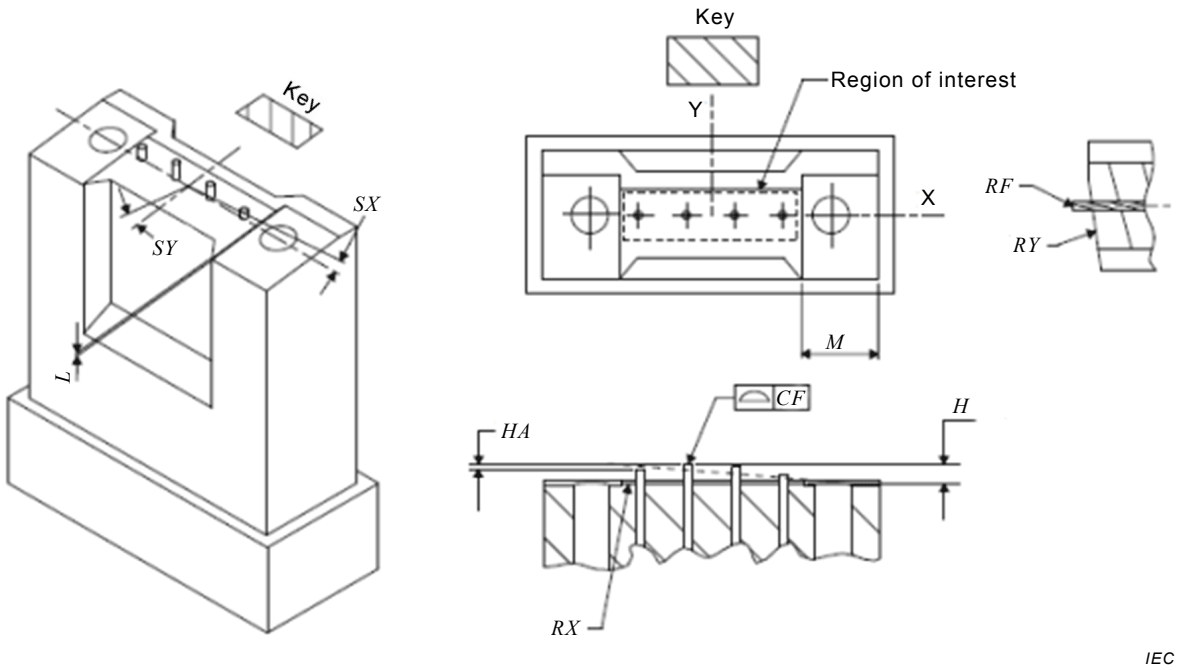


NOTE Just four fibres shown for simplicity.

**Figure 4 – Interface dimensions related to longitudinal offset**

The optical interface coordinate system is established with an x-axis, which passes through the guide hole centres, a perpendicular y-axis that passes through the midpoint of the line connecting the guide hole centres, and an orthogonal z-axis pointing away from the ferrule. All parameters are illustrated as positive values with respect to the defined coordinate system. Concave ferrule radii are indicated by negative values.

Documents
Document Sharing Hub
Full document details: IEC 61755-3-32 2015

**Table 2 – Optical interface dimensions related to lateral and angular offset for optical interface variant 2112**

| Ref. | Parameter values | | | | | | Units | Remarks |
|---|---|---|---|---|---|---|---|---|
| | Grade B | | Grade C | | Grade D | | | |
| | Minimum | Maximum | Minimum | Maximum | Minimum | Maximum | | |
| *A* | | | – | 0,002 0 | | | mm | Core position [a,b] |
| *B* | | | 4,598 | 4,602 | | | mm | Hole pitch |
| *C* | | | | | | | | |
| *C* | | | – | 0,2 | | | ° | Fibre angle error |
| *D* | | | 0,699 0 | 0,699 6 | | | mm | Diameter [c] |
| *E* | | | – | 0,012 | | | mm | Hole parallelism [d] |
| *G* | | | – | 200 | | | nm | RMS roughness |
| *J* | | | 0,698 0 | 0,699 0 | | | mm | Diameter |
| *K* | | | – | 0,000 5 | | | mm | Cylindricity |
| *L* | | | 0,010 | 0,350 | | | mm | Recess Depth |
| *M* | | | 1,4 | 1,5 | | | | Recess Width |

NOTE 1 The core location and tilt angle values specified in this standard have been calculated to ensure that the attenuation values specified in IEC 61755-2-1 are met, under all circumstances, at the single channel level. Refer to Annex A for the relationship between per channel and per connector loss statistics.

NOTE 2 Refer to Figure 2 and Figure 3 for dimensional references.

[a] Variation in fibre core centre location, as controlled by true position tolerance ∅*A*, is composed of several parameters including the fibre hole deviation, clearance between fibre cladding and hole, and relative fibre core-to-cladding concentricity. Wherever possible, inspection of the core centre shall be directly measured. Where this is not possible, due to inspection system capability or other constraints, the relevant component features may be independently measured and superimposed to establish a resultant fibre core true position.

[b] If the fibre core centre location is not directly measured for grade C performance, the fibre hole true position target shall be less than 0,001 6 mm for ferrules terminated to IEC 60793-2-50 compliant fibre with a fibre hole diameter ranging between 0,125 5 mm and 0,126 5 mm.

[c] Each guide hole shall accept a gauge pin as shown in Figure 2 of IEC 61754-5:2005 and Figure 5 of IEC 61754-7-1:2014 to a depth of 5,5 mm with a maximum force of 1,7 N. In addition, two guide holes shall accept a gauge as shown in Figure 6 of IEC 61754-5:2005 and Figure 5 of IEC 61754-7:2008 to a depth of 5,5 mm with a maximum force of 3,4 N.

[d] Parallelism tolerance applies over a hole depth of 3,3 mm.

Documents
Document Sharing Hub
Full document details: IEC 61755-3-32 2015

**Table 3 – Optical interface end face geometry dimensions related to physical contact for optical interface variant 2112**

| Ref. | Parameter values | | Units | Remarks |
|---|---|---|---|---|
| | Minimum | Maximum | | |
| *CF* | – | 0,30 | µm | Minus coplanarity [a] |
| *SX* | –0,15 | 0,15 | ° | Ferrule surface x-angle [b] |
| *SY* | 7,8 | 8,2 | ° | Ferrule surface y-angle [c] |
| *H* | 1 | 3,5 | µm | Fibre height [d] |
| *HA* | 0 | 0,5 | µm | Adjacent fibre height |
| *RF* | 1 | – | mm | Fibre tip spherical radius[e] |
| *RX* | 2 000 (convex)<br>\|–10 000\| (concave) | – | mm | Ferrule surface x-radius |
| *RY* | 5 | – | mm | Ferrule surface y-radius |
| *GL* | – | 13,9 | | Geometry limit[f] |

NOTE 1 End face parameter requirements apply to performance grades B, C, and D.

NOTE 2 Refer to Figure 4 for dimensional references.

NOTE 3 End face geometry to be measured in accordance with IEC 61300-3-30.

NOTE 4 The values in Table 3 above to be specified in the central surface region surrounding fibres of 2,900 mm wide and 0,675 mm high. Furthermore, the outside surface region is lower than the central surface region of interest.

NOTE 5 The values in Table 3 above apply for thermoset (TS) ferrules with a Young's modulus of 20 GPa to 25 GPa. Ferrule compression force: 7,8 N minimum and 11,8 N maximum.

[a] Refer to Annex B for a description of minus coplanarity.

[b] X-angle represents the slope of the ferrule surface as defined by a bi-parabolic fit in accordance with IEC 61300-3-30.

[c] Y-angle represents the slope of the ferrule surface as defined by a bi-parabolic fit in accordance with IEC 61300-3-30.

[d] A positive value indicates a fibre protrusion.

[e] Fibre tip spherical radii fitting region is defined within IEC 61300-3-30.

[f] Refer to Annex C for a description of parameter *GL*.

Documents
Document Sharing Hub
Full document details: IEC 61755-3-32 2015